**Declaration of Conformity for Recreational Craft Propulsion Engine with the Exhaust emission requirements of Directive 94/25/EC as amended by 2003/44/EC**

*(To be completed by manufacturer of inboard engines without integral exhaust)*

**Name of engine manufacturer:** Yanmar Co., Ltd.

**Street:** 1-32 **Town:** Chayamati, Kitaku, Osaka-City

**Post Code:** 530-8311 **Country:** Japan

**Name of Authorised Representative:** Yanmar Marine International B.V.

**Street:** Brugplein 11 **Town:** Almere-de Vaart

**Post Code:** 1332 BS **Country:** The Netherlands

**Name of Notified Body for exhaust emission assessment:** Germanischer Lloyd

**Street:** Vorsetzen 32/35 **Town:** Hamburg

**Post Code:** 20459 **Country:** Germany **ID Number:** 0098

**Module used for exhaust emission assessment:** ☐ B+C ☒ B+D ☐ B+E ☐ B+F ☐ G ☐ H
**or engine type-approved according to:** ☐ **stage II of Directive 97/68/EC** ☐ **Directive 88/77/EC**
**Other Community Directives applied:** 89/336/EEC

**DESCRIPTION OF ENGINE(s) AND ESSENTIAL REQUIERMENTS**

**Engine Type:**
☐ z or sterndrive without integral exhaust
☒ Inboard engine

**Fuel Type:**
☒ Diesel
☐ Petrol

**Combustion cycle:**
☐ 2 stroke
☒ 4 stroke

| Essential requirements | Standards Used | Other normative document used | See technical file |
|---|---|---|---|
| **Annex I.B – Exhaust Emissions** | | | |
| engine identification | | | |
| exhaust emission requirements | EN ISO 8178-1:1996 | | X |
| durability | | | |
| owner's manual | | | |
| **Annex I.C – Noise Emissions** | see craft manufacturer's Declaration of Conformity | | |

**ENGINE(S) COVERED BY THIS DECLARATION**

| Engine model(s) or engine family name(s): | EC Type certificate number (exhaust) |
|---|---|
| Engine family name | 35626-06 HH |
| Model name | |
| 4BY150 | |
| 4BY180 | |
| 6BY220 | |
| 6BY260 | |

I declare on behalf of the engine manufacturer that the engine(s) will meet the exhaust emission requirements of Directive 94/25/EC as amended by Directive 2003/44/EC when installed in a recreational craft, in accordance with the engine manufacturer's supplied instructions and that this (these) engine(s) must not be put into service until the recreational craft into which it is (they are) to be installed has been declared in conformity with the relevant provisions of the above mentioned Directive.

**Name:** G. J. Mantel President, Yanmar Marine International B.V. **Signature and title:**
(identification of the person empowered to sign on behalf of the engine manufacturer or his authorised representative) (or an equivalent marking)

Date: (yr/month/day) 2006 / 03 / 28



# BY series

## OPERATION MANUAL

**4BY**
**6BY**

**P/N: 0ABY0–G00101**

YANMAR

MARINE ENGINES

**Disclaimers:**

All information, illustrations and specifications in this manual are based on the latest information available at the time of publishing. The illustrations used in this manual are intended as representative reference views only. Moreover, because of our continuous product improvement policy, we may modify information, illustrations and / or specifications to explain and / or exemplify a product, service or maintenance improvement. We reserve the right to make any change at any time without notice. Yanmar and YANMAR are registered trademarks of Yanmar Co., Ltd. in Japan, the United States and / or other countries.

**All Rights Reserved:**

No part of this publication may be reproduced or used in any form by any means - graphic, electronic, or mechanical, including photocopying, recording, taping, or information storage and retrieval systems - without the written permission of Yanmar Marine International.

© 2006 Yanmar Marine International

1006



**Declaration of Conformity for Recreational Craft Propulsion Engine with the Exhaust and Noise emission requirements of Directive 94/25/EC as amended by 2003/44/EC**

*(To be completed by manufacturer of outboard or inboard engines with integral exhaust)*

**Name of engine manufacturer:** Yanmar Co., Ltd.

**Street:** 1-32 **Town:** Chayamati, Kitaku, Osaka-City

**Post Code:** 530-8311 **Country:** Japan

**Name of Authorised Representative** ( if applicable)**:** Yanmar Marine International B.V.

**Street:** Brugplein 11 **Town:** Almere-de Vaart

**Post Code:** 1332 BS **Country:** The Netherlands

**Name of Notified Body for exhaust emission assessment:** Germanischer Lloyd

**Street:** Vorsetzen 32/35 **Town:** Hamburg

**Post Code:** 20459 **Country:** Germany **ID Number**: 0098

**Name of Notified Body for noise emission assessment:** Nederlands Keurings Instituut voor Pleziervaartuigen

**Street:** Nipkowweg 9 **Town:** Joure

**Post Code:** 8500 AB **Country:** The Netherlands **ID Number**: 0613

**Module used for exhaust emission assessment:** B+C ☐ B+D ☒ B+E ☐ B+F ☐ G ☐ H ☐
**or engine type-approved according to:** ☐ **stage II of Directive 97/68/EC** ☐ **Directive 88/77/EC**

**Module used for noise emission assessment:** Aa ☒ G ☐ H ☐

**Other Community Directives applied:** 89/336/EEC

**DESCRIPTION OF ENGINE(s) AND ESSENTIAL REQUIERMENTS**

**Engine Type:**
☒ Inboard engine
☒ z or sterndrive with integral exhaust

**Fuel Type:**
☒ Diesel
☐ Petrol

**Combusion cycle:**
☐ 2 stroke
☒ 4 stroke

| Essential requirements | Standards Used | Other normative document used | See technical file |
|---|---|---|---|
| **Annex I.B – Exhaust Emissions** | | | |
| engine identification (I.B.1) | | | ☐ |
| exhaust emission requirements | EN ISO 8178-1:1996 | | ☒ |
| durability | | | ☐ |
| owner's manual | | | ☐ |
| **Annex I.C – Noise Emissions** | | | |
| Noise emission levels (I.C.1) | EN ISO 14509 | | ☒ |
| owner's manual (I.C.2) | | | ☐ |

**ENGINE(S) COVERED BY THIS DECLARATION**

| Engine model(s) or engine family name(s): | EC Type certificate number (exhaust) |
|---|---|
| Family name BY | 35626-06 HH |
| Model name | |
| 4BY150Z | |
| 4BY180Z | |
| 6BY220Z | |
| 6BY260Z | |

I declare on behalf of the engine manufacturer that the engine(s) mentioned above complie(s) with all applicable essential requirements in the way specified and is in conformity with the type for which above mentioned EC type examination certificate(s) has been issued.

**Name:** G. J. Mantel President, Yanmar Marine International B.V. **Signature and title:**
(identification of the person empowered to sign on behalf of the engine manufacturer or his authorised representative) (or an equivalent marking)

Date: (yr/month/day) 2006 / 03 / 28

## EPA WARRANTY USA ONLY

### Warranty Coverage:

Repair or replacement of any warranted parts will be performed at an authorized Yanmar dealer or distributor. This limited emission control system warranty covers engine components that are a part of the emission control system of the engine as delivered by Yanmar to the original retail purchaser. Such components may include the following:

1. Fuel Injection System
2. Turbocharger System
3. Aftercooler
4. Electronic Engine Control Units and its associated Sensor and Actuators

### Exclusions:

Failures other than those arising from defects in material and / or workmanship are not covered by this limited emissions warranty. This warranty does not extend to the following: malfunction caused by abuse, misuse, improper adjustment, modification, alteration, tampering, disconnection, improper or inadequate maintenance, improper storage or use of non-recommended fuels and lubricating oils, accident-caused damage, and replacement of expendable and / or consumable items made in connection with scheduled maintenance.

Yanmar disclaims any responsibility for incidental or consequential damages such as loss of time, inconvenience, loss of use of marine vessel / engine or commercial loss.

### Owner's Responsibility:

As the Yanmar marine engine owner, you are responsible for the performance of the required maintenance listed in your *Operation Manual*. Yanmar recommends that you retain all documentation, including receipts, covering maintenance on your marine engine, but Yanmar cannot deny warranty solely for the lack of receipts or for your failure to ensure the performance of all scheduled maintenance.

Your engine is designed to operate on diesel fuel only. Use of any other fuel may result in your engine no longer operating in compliance with applicable emission requirements. You are responsible for initiating the warranty process. You must present your marine engine to an authorized Yanmar dealer or distributor as soon as a problem exists.

### Customer Assistance:

If you have any questions regarding your warranty rights and responsibilities or would like information on the nearest authorized Yanmar dealer or distributor, you should contact Yanmar Marine USA Corporation for assistance.

**Yanmar Marine USA Corporation**
101 International Parkway
Adairsville, GA 30103
USA Telephone: 770-877-9894
Fax: 770-877-7567



# TABLE OF CONTENTS


Page

**Introduction** ..... 1
- Record of Ownership ..... 2

**Safety** ..... 3
- Safety Precautions ..... 4
  - General Information ..... 4
  - Before You Operate ..... 4
  - During Operation and Maintenance ..... 4
- Safety Decals ..... 8

**Product Overview** ..... 9
- Yanmar BY-Series Features and Applications ..... 9
  - New Engine Break In ..... 10
- Component Identification ..... 11
  - Left Side - 4BY ..... 11
  - Right Side - 4BY ..... 11
  - Top View - 4BY ..... 12
  - Left Side - 6BY ..... 12
  - Right Side - 6BY ..... 13
  - Top View - 6BY ..... 13
- Location of Nameplates ..... 14
- Function of Major Components ..... 15
- Fuses and Relays ..... 17
- Engine Cover ..... 18

**Before You Operate** ..... 19
- Diesel Fuel ..... 19
  - Diesel Fuel Specifications ..... 19
  - Filling the Fuel Tank ..... 21
  - Bleeding the Fuel System ..... 21
- Engine Oil ..... 22

## TABLE OF CONTENTS


Engine Oil Specifications ..... 22
Acceptable Engine Oil ..... 23
Checking Engine Oil ..... 26
Adding Engine Oil ..... 26
Marine Gear or Stern Drive Oil ..... 27
Power Steering Fluid Specifications ..... 27
Checking Power Steering Fluid Level ..... 27
Engine Coolant ..... 28
Acceptable Engine Coolant ..... 28
Daily Checks ..... 29
Visual Checks ..... 29
Checking Diesel Fuel, Engine Oil and Engine Coolant Levels ..... 29
Checking the Battery Electrolyte Level ..... 29
Checking the Alarm Indicators ..... 29
Preparing Fuel, Oil and Coolant in Reserve ..... 29
Checking Power Steering Fluid ..... 29
Draining the Fuel / Water Separator ..... 30
**Engine Operation** ..... 31
Starting the Engine ..... 33
Starting at Low Temperatures ..... 33
Shutting Down the Engine ..... 34
Emergency Shut Down ..... 34
Checking the Engine After Operation ..... 34
**Periodic Maintenance** ..... 35
Safety Precautions ..... 35
Precautions ..... 37
The Importance of Periodic Maintenance ..... 37
Performing Periodic Maintenance ..... 37
The Importance of Daily Checks ..... 37
Keep a Log of Engine Hours and Daily Checks ..... 37
Yanmar Replacement Parts ..... 37
Tools Required ..... 37
Ask Your Authorized Yanmar Marine Dealer or Distributor For Help ..... 37
Required EPA Maintenance ..... 37
EPA Requirements ..... 38
Conditions to Ensure Compliance with EPA Emission Standards ..... 38
Inspection and Maintenance ..... 38
Periodic Maintenance Schedule ..... 39




# EPA WARRANTY USA ONLY

## YANMAR CO., LTD. LIMITED EMISSION CONTROL SYSTEM WARRANTY - USA ONLY

THIS EMISSION WARRANTY APPLIES TO THE ENGINES CERTIFIED TO UNITED STATES EPA 40 CFR 94 AND SOLD BY YANMAR THAT ARE INSTALLED IN VESSELS FLAGGED OR REGISTERED IN THE UNITED STATES.

### Your Warranty Rights and Obligations:

Yanmar warrants to the first user and each subsequent purchaser the emission control system on your engine for periods of time listed below provided the engine has been installed according to Yanmar installation requirements and there has been no abuse, neglect, or improper maintenance of your Yanmar marine engine.

Yanmar warrants that the engine is designed, built and tested using genuine parts and equipped so as to conform to all applicable emission requirements of the U.S. Environmental Protection Agency and is free from defects in material and workmanship which would cause this engine to fail to conform to the applicable emission regulations over its limited emission control system warranty period.

Where a warrantable emissions condition exists, Yanmar will repair your engine at no charge to you for diagnosis, parts, and labor. Warranty service or repair will be provided at authorized Yanmar marine dealers or distributors.

It is recommended that any replacement parts used for maintenance, repair or replacement of emission control systems are Yanmar parts. The owner may elect to have maintenance, replacement or repair of the emission control components and systems performed by any repair establishment or individual and may elect to use parts other than Yanmar parts for such maintenance, replacement or repair. However, the cost of such service or parts and subsequent failures from such service or parts will not be covered under this emission control system warranty:

### Warranty Period:

The warranty starts on either the date of delivery to the first end-user, or the date the unit is first leased, rented, or loaned.

For Pleasure Use: The warranty period is **five (5) years** or **2000 hours** of use, whichever occurs first. In the absence of a device to measure hours of use, the engine has a warranty period of **five (5) years**.

## Tightening Fasteners

Use the correct amount of torque when you tighten fasteners on the machine. Applying excessive torque may damage the fastener or component and not enough torque may cause a leak or component failure.

## Standard Torque Values

### Hexagon Bolts and Nuts

| Nominal Diameter | Grade (Lubricated) | | |
|---|---|---|---|
| | 8.8 or 8 | 10.9 or 10 | 12.9 or 12 |
| M4 | 2.7 N·m (24 in.-lb) | 3.88 N·m (34.3 in.-lb) | 4.6 N·m (41 in.-lb) |
| M5 | 5.5 N·m (48.6 in.-lb) | 8 N·m (71 in.-lb) | 9.5 N·m (84 in.-lb) |
| M6 | 9.5 N·m (84 in.-lb) | 13 N·m (115 in.-lb) | 16 N·m (142 in.-lb) |
| M7 | 15 N·m (133 in.-lb) | 22 N·m (195 in.-lb) | 26 N·m (230 in.-lb) |
| M8 | 23 N·m (204 in.-lb) | 32 N·m (24 ft-lb) | 39 N·m (29 ft-lb) |
| M8 x 1 | 25 N·m (221 in.-lb) | 35 N·m (26 ft-lb) | 42 N·m (31 ft-lb) |
| M10 | 46 N·m (34 ft-lb) | 64 N·m (47 ft-lb) | 77 N·m (57 ft-lb) |
| M10 x 1.25 | 49 N·m (36 ft-lb) | 68 N·m (50 ft-lb) | 82 N·m (60 ft-lb) |
| M12 | 80 N·m (59 ft-lb) | 110 N·m (81 ft-lb) | 135 N·m (100 ft-lb) |
| M12 x 1.5 | 88 N·m (65 ft-lb) | 125 N·m (92 ft-lb) | 150 N·m (111 ft-lb) |

### Hose Clamps

*Note: Reuse and retightening is prohibited for all hose clamps. Always install new hose clamps.*

| Size | Specification |
|---|---|
| 5mm Hex Head | 1.0 - 1.5 N·m (8.9 - 13 in.-lb) |
| 6mm Hex Head | 2.5 - 3.5 N·m (22 - 31 in.-lb) |






Inspection and Maintenance for EPA Emission-Related Parts ..... 43
Periodic Maintenance Procedures ..... 44
After Initial 50 Hours of Operation ..... 44
Every 50 Hours of Operation ..... 45
Every 250 Hours of Operation ..... 46
Every 500 Hours of Operation ..... 51
Every 1000 Hours of Operation ..... 52
Every 2000 Hours of Operation ..... 53
**Troubleshooting** ..... 55
Troubleshooting Chart ..... 55
Starting Trouble ..... 55
Exhaust Color ..... 56
Vibration - Drive Disengaged ..... 56
Vibration - Drive Engaged ..... 57
Engine Knocks ..... 57
Low Power Output ..... 57
Engine Overheat ..... 58
Engine Runs Cold ..... 58
Coolant Loss ..... 58
Troubleshooting Information ..... 58
Diagnostic Trouble Codes ..... 59
**Long-Term Storage** ..... 65
Prepare Engine for Long-Term Storage ..... 65
Draining the Seawater Cooling System ..... 66
**Specifications** ..... 67
Engine Specifications ..... 67
Tightening Fasteners ..... 70
**EPA Warranty USA Only** ..... 71
Yanmar Co., Ltd. Limited Emission Control System Warranty - USA Only ..... 71
Your Warranty Rights and Obligations: ..... 71
Warranty Period: ..... 71
Warranty Coverage: ..... 72
Exclusions: ..... 72
Owner's Responsibility: ..... 72
Customer Assistance: ..... 72

## TABLE OF CONTENTS

**This Page Intentionally Left Blank**



## SPECIFICATIONS

| Engine Model | | 4BY150 / 150Z | 4BY180 / 180Z | 6BY220 / 220Z | 6BY260 / 260Z |
|---|---|---|---|---|---|
| Width | | 670 mm (26.4 in.) (local exceeding) | | | |
| Weight (without marine gear) | | | | | |
| | Dry (without mixing elbow) | 250 kg (551 lb) | | 310 kg (683 lb) | |
| | Wet (with mixing elbow) | 270 kg (595 lb) | | 340 kg (750 lb) | |

* Cylinder numbering starts at the coolant pump end of the engine.

** Rating condition: ISO 8665. Temperature of fuel: 40˚C (104˚F) at fuel pump inlet 1 hp (metric horsepower) = 0.7355 kW Fuel condition: Density at 15˚C (59˚F) = 0.827 g/cm$^3$ Fuel temperature at the inlet of the fuel injection pump

*** The “Total Engine Lubricating Oil Capacity” includes oil in the oil pan, channels, coolers, and filter. The “Effective Engine Lubricating Capacity” indicates the difference in maximum scale of the dipstick and minimum scale.

**** Capacity may vary depending on installation angle.

## SPECIFICATIONS

| Engine Model | 4BY150 / 150Z | 4BY180 / 180Z | 6BY220 / 220Z | 6BY260 / 260Z |
|---|---|---|---|---|
| Charging System | 12 V / 150 A | | | |
| Battery Capacity - Recommended | 12 V / 74 Ah / 680 CCA (cold cranking amps) | | | |
| Fuel Injection System | Common rail (ECU-controlled) | | | |
| Fuel Injection Pressure | Variable depending on rpm; 250 - 1600 bar (3626 - 23,206 psi) | | | |
| Injection Timing | Variable (ECU controlled) | | | |
| ECU Threshold Voltage | 7.8 V | | | |
| Maximum Allowable Exhaust Backpressure | 1835 mmAq (72.3 in.Aq) | | 2039 mmAq (80.3 in.Aq) | |
| Cooling System | Closed cooling system with seawater heat exchanger | | | |
| Coolant Capacity (Approximate) | 10.0 L (10.6 qt) | | 13.5 L (14.3 qt) | |
| Seawater Pump | Rubber impeller, belt driven | | | |
| Capacity | 140 L / hour minimum (37 gal / hour minimum) at 4000 engine rpm | | | |
| Maximum Lift | 2000 mm (78.75 in.) | | | |
| Hydraulic Oil Cooler | Seawater cooled | | | |
| Lubrication System | Totally enclosed, forced lube system | | | |
| Oil Cooler | Engine coolant system | | | |
| Lube Oil Pressure at 4000 rpm | 3.5 - 6.0 bar (51 - 87 psi) | | | |
| Lube Oil Pressure at 1000 rpm | 0.6 - 1.0 bar (8.7 - 14.5 psi) | | | |
| Lube System Capacity*** | 8.0 L (8.5 qt)**** | | 11.0 L (11.5 qt)**** | |
| Crankcase Ventilation | Closed, with filter | | | |
| Drive Options | | | | |
| Stern Drive | Bravo-1, -2, -3 | | | |
| Marine Gear | KMH40 | | KMH40 or KMH50 | |
| Installation Angles: Static Angle | | | | |
| Front-to-Rear | ± 4˚ | | | |
| Left-to-Right | ± 0˚ | | | |
| Operational Angles: Front-to-Rear and Left-to-Right | | | | |
| Continuous | 10˚ maximum | | | |
| Peak | 20˚ maximum | | | |
| Height | 721 mm (28.4 in.) | | | |
| Length (without marine gear) | | | | |
| Stern Drive (front-to-middle of engine mount) | 760 mm (29.9 in.) | | 942 mm (37.1 in.) | |
| Marine Gear (front-to-marine gear mounting face) | 644 mm (25.4 in.) | | 825.5 mm (32.5 in.) | |
| Overall Length | 861 mm (33.9 in.) | | 1001 mm (39.4 in.) | |



# INTRODUCTION

Welcome to the world of Yanmar Marine! Yanmar Marine offers engines, drive systems and accessories for all types of boats, from runabouts to sailboats, and from cruisers to mega yachts. In marine leisure boating, the worldwide reputation of Yanmar Marine is second to none. We design our engines to respect nature. This means quieter engines, with minimal vibrations, cleaner than ever. All of our engines designed after 1996 meet most of the present and future emission regulations, such as BSO II, SAV, EPA II, IMO and RCD.

To help you enjoy your Yanmar BY engine for many years to come, please follow these recommendations:

- Read and understand this *Operation Manual* before you operate the machine to ensure that you follow safe operating practices and maintenance procedures.
- Keep this *Operation Manual* in a convenient place for easy access.
- If this *Operation Manual* is lost or damaged, order a new one from your authorized Yanmar marine dealer or distributor.
- Make sure this manual is transferred to subsequent owners. This manual should be considered a permanent part of the engine and remain with it.
- Constant efforts are made to improve the quality and performance of Yanmar products, so some details included in this *Operation Manual* may differ slightly from your engine. If you have any questions about these differences, please contact your authorized Yanmar marine dealer or distributor.
- The specifications and components (instrument panel, fuel tank, etc.) described in this manual may differ from ones installed on your vessel. Please refer to the manual provided by the manufacturer of these components.

## RECORD OF OWNERSHIP

Take a few moments to record the information you need when you contact Yanmar for service, parts or literature.

**Engine Model:** _____

**Engine Serial No.:** _____

**Date Purchased:** _____

**Dealer:** _____

**Dealer Phone:** _____



# SPECIFICATIONS

## ENGINE SPECIFICATIONS

| Engine Model | 4BY150 / 150Z | 4BY180 / 180Z | 6BY220 / 220Z | 6BY260 / 260Z |
|---|---|---|---|---|
| Application Design | Models numbers with no suffix letter are used in marine gear applications. Models having a “Z” suffix are used with stern drive. | | | |
| Number of Cylinders | In-line 4 | | In-line 6 | |
| Type | 15˚ inclined, water-cooled, dual overhead camshaft, 4-cycle diesel | | | |
| Combustion System | Direct injection | | | |
| Aspiration | Turbocharged with charge air cooler | | | |
| Bore x Stroke | 84 mm x 90 mm (3.307 in. x 3.543 in.) | | | |
| Displacement | 1.995 L (122 cu in.) | | 2.993 L (183 cu in.) | |
| Firing Order* | 1-3-4-2 | | 1-5-3-6-2-4 | |
| Compression Ratio | 16.5:1 | | 16.5:1 | |
| Rated Power Output** | 4BY150 / 4BY150Z | 4BY180 / 4BY180Z | 6BY220 / 6BY220Z | 6BY260 / 6BY260Z |
| kW (metric hp) at 4000 rpm | 110 kW (150 hp) | 132 kW (180 hp) | 162 kW (220 hp) | 191 kW (260 hp) |
| Mean Pressure | 1.66 MPa (240.76 psi) | 1.98 MPa (287.18 psi) | 1.62 MPa (234.96 psi) | 1.92 MPa (278.47 psi) |
| Torque | 317 N·m (234 ft-lb) | 355 N·m (262 ft-lb) | 487 N·m (359 ft-lb) | 545 N·m (402 ft-lb) |
| Low Idle Speed (Warm Engine @ 88˚C [190˚F]) | 750 rpm (ECU-controlled) | | 670 rpm (ECU-controlled) | |
| Cold Start Speed @ 20˚C (68˚F) | 1200 rpm gradually decreasing to warm engine idle @ 88˚C (190˚F) (ECU-controlled) | | | |
| High Idle Speed | 4600 rpm | | | |
| Rotation Direction | Counterclockwise (viewed from flywheel) | | | |
| No. of Valves per Cylinder | 4 | | | |
| Valve Adjustment | Hydraulic self-adjusting | | | |
| Turbocharger | MHI with pneumatic wastegate | | HOLSET with pneumatic wastegate | |
| Charge Air Cooler | Seawater cooled | | | |
| Electrical System | 12 V | | | |
| Starter | 12 V / 2 kW (2.7 hp) | | | |

## Draining the Seawater Cooling System

NOTICE: *If water fails to drain from any open drain cock or port, remove the cock completely and probe the opening with a small piece of wire to loosen debris.*

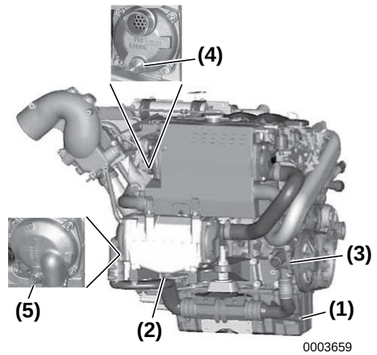


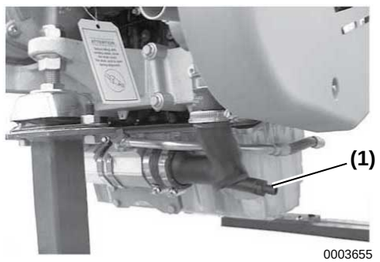


*Figure 1*

**WARNING!** ***NEVER drain the seawater cooling system if the engine is hot. Steam and hot fluid will escape and seriously burn you. Allow the engine to cool before attempting to opening the drain cocks.***

1. Open the lower seawater drain cock **(Figure 1, (1))** located in the piping between the seawater pump and hydraulic oil cooler. Allow to drain.
2. Open the drain cock **(Figure 1, (2))** on the bottom of the charge air cooler.
3. Remove the seawater pump cover. See your authorized Yanmar dealer or distributor.
4. Remove zinc anodes from the heat exchanger **(Figure 1, (4))** and charge air cooler **(Figure 1, (5))** and allow water to drain from housings.

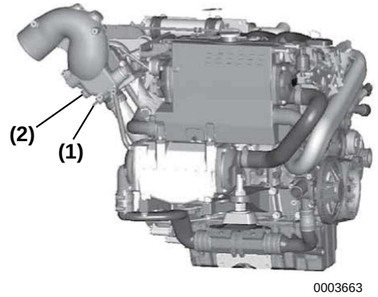


*Figure 2*

5. **Engines having the optional high-rise exhaust elbow:** Open drain cock **(Figure 2, (1))** and allow water to drain. Remove and inspect zinc anode **(Figure 2, (2))**.

   NOTICE: *Do not use thread sealer or thread sealing tape when installing zinc anodes. Anodes must make good metal-to-metal contact to perform properly.*
6. Inspect condition of zinc anodes. Install anodes. *See Replacing the Zinc Anodes on page 49*.
7. Close all drain cocks.



# SAFETY

Yanmar considers safety of great importance and recommends that anyone that comes into close contact with its products, such as those who install, operate, maintain or service Yanmar products exercise care, common sense and comply with the safety information in this manual and on the machine's safety decals. Keep the decals from becoming dirty or torn and replace them if they are lost or damaged. Also, if you need to replace a part that has a decal attached to it, make sure you order the new part and decal at the same time.

This safety alert symbol appears with most safety statements. It means attention, become alert, your safety is involved! Please read and abide by the message that follows the safety alert symbol.

**⚠ DANGER**

**Indicates a hazardous situation which, if not avoided, *will* result in death or serious injury.**

**⚠ WARNING**

**Indicates a hazardous situation which, if not avoided, *could* result in death or serious injury.**

**⚠ CAUTION**

**Indicates a hazardous situation which, if not avoided, *could* result in minor or moderate injury.**

***NOTICE***

Indicates a situation which can cause damage to the machine, personal property and / or the environment or cause the equipment to operate improperly.

## SAFETY PRECAUTIONS

### General Information

There is no substitute for common sense and careful practices. Improper practices or carelessness can cause burns, cuts, mutilation, asphyxiation, other bodily injury or death. This information contains general safety precautions and guidelines that must be followed to reduce risk to personal safety. Special safety precautions are listed in specific procedures. Read and understand all of the safety precautions before operation or performing repairs or maintenance.

### Before You Operate

**⚠ DANGER**

**The safety messages that follow have WARNING level hazards.**



NEVER permit anyone to install or operate the engine without proper training.

- Read and understand this Operation Manual before you operate or service the engine to ensure that you follow safe operating practices and maintenance procedures.
- Safety signs and decals are additional reminders for safe operating and maintenance techniques.
- See your authorized Yanmar marine dealer or distributor for additional training.

### During Operation and Maintenance

**⚠ DANGER**

**The safety message that follows has DANGER level hazards.**

**Crush Hazard**



NEVER stand under hoisted engine. If the hoist mechanism fails, the engine will fall on you.



# LONG-TERM STORAGE

If the engine is not to be used for an extended period of time, special measures should be taken to protect the coolant system, fuel system and combustion chambers from corrosion and the exterior from rusting. It is recommended that you see your authorized Yanmar marine dealer or distributor to prepare the engine for long-term storage.

The engine can normally stand idle for up to six months. If it remains unused for longer than this, please contact your authorized Yanmar marine dealer or distributor.

**Winter Storage**

Drain water from fuel tank and fuel filters before and after extended storage.

To reduce the risk of condensation in the fuel tank during winter storage, fill the tank with fuel and treat with diesel fuel stabilizer.

## PREPARE ENGINE FOR LONG-TERM STORAGE

NOTICE: *Do not drain closed cooling system for long-term storage. Antifreeze must be used to avoid freezing and damaging of components. Antifreeze will prevent rusting during long-term storage.*

1. Change engine oil and filter.
2. Drain seawater cooling system. *See Draining the Seawater Cooling System on page 66*.
3. Wipe off any dust or oil from the outside of the engine.
4. Drain fuel tank or fill the tank to prevent condensation.
5. Grease the exposed areas and joints of the remote control cables and the bearings of the remote control handle.
6. Seal the intake silencer, exhaust pipe, etc. to prevent moisture or contamination from entering engine.
7. Completely drain bilge in hull bottom.
8. Waterproof the engine room to prevent rain or seawater from entering.
9. Charge the battery once a month to compensate for battery's self-discharge.
10. Remove key from key switch and cover key switch with moisture cap (if equipped).

**This Page Intentionally Left Blank**





## ⚠ WARNING

**The safety messages that follow have WARNING level hazards.**

### Explosion Hazard



Avoid serious personal injury or equipment damage. While the engine is running or the battery is charging, hydrogen gas is being produced and can be easily ignited. Keep the area around the battery well-ventilated and keep sparks, open flames and any other form of ignition out of the area.

### Fire and Explosion Hazard

Diesel fuel is flammable and explosive under certain conditions.

NEVER use a shop rag to catch the fuel.

Wipe up all spills immediately.

NEVER refuel with the engine running.

Store any containers containing fuel in a well-ventilated area, away from any combustibles or sources of ignition.

NEVER place diesel fuel or other flammable material such as oil, hay or dried grass close to the engine during engine operation or shortly after shut down.

### Fire Hazard



Avoid injury or equipment damage from fire. Undersized wiring systems can cause an electrical fire.

### Sever Hazard



Rotating parts can cause severe injury or death. NEVER wear jewelry, unbuttoned cuffs, ties or loose fitting clothing and ALWAYS tie long hair back when working near moving / rotating parts such as the flywheel or PTO shaft. Keep hands, feet and tools away from all moving parts.

### Exposure Hazard



To avoid injury, ALWAYS wear personal protective equipment including appropriate clothing, gloves, work shoes, eye and hearing protection as required by the task at hand.

### Entanglement Hazard



NEVER leave the key in the key switch when you are servicing the engine. Someone may accidentally start the engine and not realize you are servicing it.

Avoid personal injury. NEVER operate the engine while wearing a headset to listen to music or radio because it will be difficult to hear the warning signals.

Stop the engine before you begin to service it.

If you must service the engine while it is operating, remove all jewelry, tie back long hair, and keep your hands, other body parts and clothing away from moving / rotating parts.

## ▲ WARNING

### Alcohol and Drug Hazard



NEVER operate the engine while under the influence of alcohol or drugs or feeling ill.

### Piercing Hazard



Avoid skin contact with high-pressure diesel fuel spray caused by a fuel system leak such as a broken fuel injection line. High-pressure fuel can penetrate your skin and result in serious injury. If you are exposed to high-pressure fuel spray, obtain prompt medical treatment.

NEVER check for a fuel leak with your hands. ALWAYS use a piece of wood or cardboard. Have your authorized Yanmar marine dealer or distributor repair the damage.

### Burn Hazard



Avoid serious injury. Some of the engine surfaces become very hot during operation and shortly after shut-down. Keep hands and other body parts away from hot engine surfaces.

### Sudden Movement Hazard

Avoid personal injury. ALWAYS stop the engine before beginning service.

### Exhaust Hazard



Avoid serious injury or death. NEVER block windows, vents or other means of ventilation if the engine is operating in an enclosed area. All internal combustion engines create carbon monoxide gas during operation and special precautions are required to avoid carbon monoxide poisoning.

## ▲ CAUTION

The safety messages that follow have CAUTION level hazards.

### Poor Lighting Hazard

Avoid personal injury or equipment damage. Ensure that the work area is adequately illuminated. ALWAYS install wire cages on portable safety lamps.

### Tool Hazard

Avoid personal injury or equipment damage. ALWAYS use tools appropriate for the task at hand and use the correct size tool for loosening or tightening machine parts.

### Flying Object Hazard

Avoid personal injury. ALWAYS wear eye protection when servicing the engine or when using compressed air or high-pressure water. Dust, flying debris, compressed air, pressurized water or steam may injure your eyes.

### Coolant Hazard



Wear eye protection and rubber gloves when you handle Long Life engine coolant. If contact with the eyes or skin should occur, flush eyes and wash immediately with clean water.





| Code | Part or System | Mode | Run Or Condition | Engine Can Start | Check Engine Alarm |
|---|---|---|---|---|---|
| P0689 | Main Relay | Power relay sense short circuit low | no | no | alarm |
| P0690 | Main Relay | Power relay sense short circuit high | no | no | alarm |
| P2049 | 4BY - Injector Bank 1 | Short circuit on high side to Ground / B+ | no | no | alarm |
| | 6BY - Injector Bank 1 | Short circuit on high side to Ground / B+ | reduce | no | |
| P2052 | 4BY - Injector Bank 2 | Short circuit on high side to Ground / B+ | reduce | yes | alarm |
| | 6BY - Injector Bank 2 | Short circuit on high side to Ground / B+ | reduce | yes | |
| P2227 | Atmospheric Pressure | Plausibility check with BPS (boost pressure sensor) fail | yes | yes | alarm |
| P2228 | Atmospheric Pressure | Short circuit low | yes | yes | alarm |
| P2229 | Atmospheric Pressure | Short circuit high | yes | yes | alarm |
| P2614 | Camshaft Speed Sensor | No connection / short circuit | reduce | yes | alarm |
| P2617 | Crankshaft Speed Sensor | No connection / short circuit | no | no | alarm |
| U0001 | CAN Throttle Signal | No signal | idle | yes | alarm |
| U0426 | Immobilizer | Manipulation error | no | no | alarm |

* Relative value is the value read on a pressure gauge attached to the intake pipe.

** Absolute is the value reported by the ECU and displayed at the helm digital display.

| Code | Part or System | Mode | Run Or Condition | Engine Can Start | Check Engine Alarm |
|---|---|---|---|---|---|
| P0238 | Boost Pressure | 4 bar (58.0 psi) (absolute**) | reduce | yes | alarm |
| | Boost Pressure Sensor | Short circuit to B+ | reduce | yes | alarm |
| P0261 | Injector No. 1 | Short circuit to B+ | reduce | yes | alarm |
| P0264 | Injector No. 2 | Short circuit to B+ | reduce | yes | alarm |
| P0267 | Injector No. 3 | Short circuit to B+ | reduce | yes | alarm |
| P0270 | Injector No. 4 | Short circuit to B+ | reduce | yes | alarm |
| P0273 | Injector No. 5 | Short circuit to B+ | reduce | yes | alarm |
| P0276 | Injector No. 6 | Short circuit to B+ | reduce | yes | alarm |
| P0344 | Crankshaft Speed Sensor | Disagreement between camshaft speed sensor and crankshaft speed sensor | no | no | alarm |
| P0380 | Glow Control Relay Actuator | Not connected, short circuit | yes | yes | alarm |
| P0562 | System Voltage Low | - | yes | no | alarm |
| P0563 | System Voltage High | - | yes | yes | alarm |
| P0602 | Control Module Programming Error (Hwemon) | Overvoltage / undervoltage | no | no | alarm |
| | Shut Off Path | Control module programming error | no | no | alarm |
| P0607 | Injector Chip Fault | Injector control module performance | no | no | alarm |
| P0642 | Sensor Supply Monitoring 1 | Short circuit | reduce | yes | alarm |
| P0643 | Sensor Supply Monitoring 1 | Short circuit | reduce | yes | alarm |
| P0650 | Check Engine Lamp | Not connected, short circuit | yes | yes | alarm |
| P0652 | Sensor Supply Monitoring 2 | Short circuit | reduce | yes | alarm |
| P0653 | Sensor Supply Monitoring 3 | Short circuit | reduce | yes | alarm |
| P0670 | Glow Plug Control Module | Failure, short circuit, over-current | yes | yes | alarm |
| P0671 | Glow System - Glow Spark No. 1 | Not connected, short circuit | yes | yes | alarm |
| P0672 | Glow System - Glow Spark No. 2 | Not connected, short circuit | yes | yes | alarm |
| P0673 | Glow System - Glow Spark No. 3 | Not connected, short circuit | yes | yes | alarm |
| P0674 | Glow System - Glow Spark No. 4 | Not connected, short circuit | yes | yes | alarm |
| P0675 | Glow System - Glow Spark No. 5 | Not connected, short circuit | yes | yes | alarm |
| P0676 | Glow System - Glow Spark No. 6 | Not connected, short circuit | yes | yes | alarm |





**NOTICE**

**The safety messages that follow have NOTICE level hazards.**

It is important to perform daily checks as listed in the *Operation Manual*.

Periodic maintenance prevents unexpected downtime, reduces the number of accidents due to poor engine performance and helps extend the life of the engine.

---

See your authorized Yanmar marine dealer or distributor if you need to operate the engine at high altitudes. At high altitudes the engine will lose power, run rough and produce exhaust gases that exceed the design specifications.

---



ALWAYS be environmentally responsible.

Follow the guidelines of the EPA or other governmental agencies for the proper disposal of hazardous materials such as engine oil, diesel fuel and engine coolant. Consult the local authorities or reclamation facility.

---

NEVER dispose of hazardous materials by dumping them into a sewer, on the ground or into ground water or waterways.

---

If a Yanmar Marine Engine is installed at an angle that exceeds the specifications stated in the Yanmar Marine Installation manuals, engine oil may enter the combustion chamber causing excessive engine speed, white exhaust smoke and serious engine damage. This applies to engines that run continuously or those that run for short periods of time.

If you have an installation with two or three engines and only one engine is operating, the water pickup (thru-hull) of the non-running engine(s) should be closed. This will prevent water from being forced past the seawater pump and eventually finding its way into the engine. The result of water entering the engine could cause seizure or other serious problems.

---

If you have an installation with two or three engines, and only one engine is operating, please note that if the propeller shaft thru-hull (stuffing box) is lubricated by engine water pressure and the engines are interconnected, care must be taken that water from the running engine does not enter the exhaust of the non-running engine (s). This water could cause seizure of the non-running engine(s). See your authorized Yanmar marine dealer or distributor for a complete explanation of this condition.

---

If you have an installation with two or three engines, and only one engine is operating, it is important to limit the amount of throttle applied to the running engine. If you observe black smoke or movement of the throttle does not increase engine rpm, you are overloading the engine that is running. Immediately throttle back to approximately 2/3 throttle or to a setting where the engine performs normally. Failure to do so may cause the running engine to overheat or cause excess carbon buildup which may shorten the engine's life.

# SAFETY DECALS

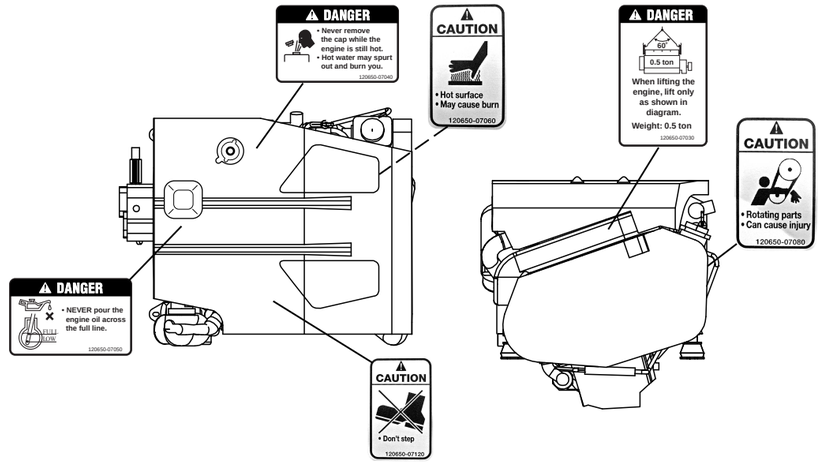


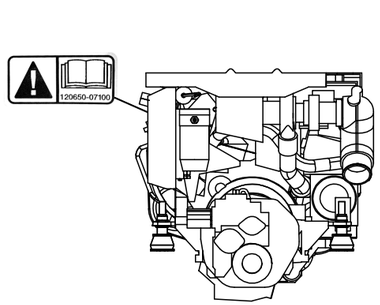


0004537

***Figure 1***





| Code | Part or System | Mode | Run Or Condition | Engine Can Start | Check Engine Alarm |
|---|---|---|---|---|---|
| P0122 | Throttle Signal | Both throttle signals are missing / short circuit to Ground | 1600 | yes | alarm |
| | Throttle Signal | Throttle signal 1 is missing / short circuit to Ground | reduce | yes | alarm |
| P0123 | Throttle Signal | Both throttle signals are short circuited to B+ | 1600 | yes | alarm |
| | Throttle Signal | Throttle signal 1 short circuit to B+ | reduce | yes | alarm |
| P0182 | Fuel Temperature Sensor | Short circuit to B+ | reduce | yes | alarm |
| P0183 | Fuel Temperature Sensor | No connection / short circuit to Ground | reduce | yes | alarm |
| P0192 | Fuel Rail Pressure Sensor | Short circuit to Ground | reduce | yes | alarm |
| P0193 | Fuel Rail Pressure Sensor | No connection / short circuit B+ | reduce | yes | alarm |
| P0201 | Injector No. 1 | Open circuit / short circuit to Ground | reduce | yes | alarm |
| P0202 | Injector No. 2 | Open circuit / short circuit to Ground | reduce | yes | alarm |
| P0203 | Injector No. 3 | Open circuit / short circuit to Ground | reduce | yes | alarm |
| P0204 | Injector No. 4 | Open circuit / short circuit to Ground | reduce | yes | alarm |
| P0205 | Injector No. 5 | Open circuit / short circuit to Ground | reduce | yes | alarm |
| P0206 | Injector No. 6 | Open circuit / short circuit to Ground | reduce | yes | alarm |
| P0222 | Throttle Signal | Both throttle signals are missing / short circuit to Ground | 1600 | yes | alarm |
| | Throttle Signal | Throttle signal 2 is missing / short circuit to Ground | reduce | yes | alarm |
| P0223 | Throttle Signal | Both throttle signals are short circuited to B+ | 1600 | yes | alarm |
| | Throttle Signal | Throttle signal 2 short circuited to B+ | reduce | yes | alarm |
| P0230 | Fuel Feed Pump | Not connected | no | no | alarm |
| P0231 | Fuel Feed Pump | Short circuit to Ground | reduce | yes | alarm |
| P0232 | Fuel Feed Pump | Short circuit to B+ | no | no | alarm |
| P0236 | Boost Pressure | Plausibility check with APS (ambient air pressure sensor) fail | reduce | yes | alarm |
| P0237 | Boost Pressure | Under 0.5 bar (7.3 psi) (absolute**) | reduce | yes | alarm |
| | Boost Pressure Sensor | No connection / short circuit to Ground | reduce | yes | alarm |

## Diagnostic Trouble Code Table

| Code | Part or System | Mode | Run Or Condition | Engine Can Start | Check Engine Alarm |
|---|---|---|---|---|---|
| No Code | Coolant Temp | Under 0˚C (32˚F) | 1000 rpm | yes | no |
| No Code | Coolant Temp | Over 108˚C (226˚F) | reduce | yes | alarm |
| No Code | Charge Air Temp | Over 110˚C (230˚F) | reduce | yes | no |
| No Code | Boost Pressure Reading | 4BY - over 1.9 bar (27.5 psi) (relative*) or 2.9 bar (42.0 psi) (absolute**)<br>6BY - over 2.3 bar (33.3 psi) (relative*) or 3.3 bar (42.9 psi) (absolute**) | reduce | yes | alarm |
| No Code | Fuel Temperature | Over 90˚C (194˚F) | reduce | yes | no |
| No Code | Neutral Switch | Only in case of analog throttle or in case of CAN-fault (U0001), wrong configuration - neutral position | no | no | alarm |
| P0001 | Fuel Metering Unit | Not connected | reduce | yes | alarm |
| P0003 | Fuel Metering Unit | Short circuit to Ground | no | no | alarm |
| P0004 | Fuel Metering Unit | Short circuit to B+ | reduce | yes | alarm |
| P0087 | Fuel Rail Pressure System Deviation | Fuel rail pressure out of range | reduce or shut off | depends on fault | alarm |
| P0088 | Fuel Rail Pressure System Deviation | Fuel rail pressure out of range | reduce or shut off | depends on fault | alarm |
| P0089 | Fuel Rail Pressure System Deviation | Fuel rail pressure out of range | yes | yes | alarm |
| P0090 | Fuel Pressure Control Valve | Not connected / valve failure | no | no | alarm |
| | Fuel Rail Pressure System Deviation | Fuel rail pressure out of range | reduce | yes | alarm |
| P0091 | Fuel Pressure Control Valve | Short circuit to Ground | reduce | yes | alarm |
| P0092 | Fuel Pressure Control Valve | Short circuit to B+ | no | no | alarm |
| P0112 | Charge Air Temp | Over 125˚C (257˚F) | reduce | yes | alarm |
| | Charge Air Temp Sensor | Short circuit to B+ | reduce | yes | alarm |
| P0113 | Charge Air Temp | Under -20˚C (-4˚F) | reduce | yes | alarm |
| | Charge Air Temp Sensor | No connection / short circuit to Ground | reduce | yes | alarm |
| P0117 | Coolant Temp Sensor | Short circuit to B+ | reduce | yes | alarm |
| P0118 | Coolant Temp Sensor | No connection / short circuit to Ground | reduce | yes | alarm |



# PRODUCT OVERVIEW

## YANMAR BY-SERIES FEATURES AND APPLICATIONS

The BY-series engines are in-line 4- and 6-cylinder direct injection diesel engines. The engines are turbocharged and equipped with a liquid cooling system.

These engines are designed for pleasure craft use.

In order to obtain full performance from your engine, it is imperative that you check the size and structure of the hull and use a propeller of the appropriate size. As new boats are used, owners add additional equipment and completely fill the fuel and water tanks adding to the overall displacement (weight) of the vessel. Extra canvas enclosures, bottom paint, and bottom fouling can add additional hull resistance. It is recommended that a new vessel be propped so the engine can operate at 100 rpm above maximum rpm to allow for some added weight and hull resistance. Failure to do so can lead to reduced vessel performance, increased smoke levels and cause permanent damage to your engine.

The engine must be installed correctly with the seawater or cooling water piping, exhaust gas piping and electrical wiring. Any auxiliary equipment attached to the engine should be easy to use and accessible for service. To handle the drive equipment, propulsion systems (including the propeller) and other on-board equipment, be sure to observe the instructions and cautions given in the operation manuals supplied by the shipyard and equipment manufacturers.

The laws of some countries may require hull and engine inspections, depending on the use, size and cruising area of the boat. The installation, fitting and surveying of this engine all require specialized knowledge and engineering skills. See Yanmar's local subsidiary in your region or your authorized Yanmar marine dealer or distributor.

This engine is designed for pleasure boat applications. The engine is designed to be operated at: maximum throttle for less than 5% of its total operation time (30 minutes out of every 10 hours). The engine should be operated at cruising speed (3200 - 3300 rpm) for less than 90% of its total operation time (9 hours out of every 10 hours).

### New Engine Break In

- On the initial engine start-up, check for proper engine oil pressure, diesel fuel leaks, engine oil leaks, coolant leaks, and for proper operation of the indicators and / or gauges.
- During the first 50 hours of operation, operate your new engine under a substantial load at all times. For best break-in results, operate the engine at various speeds.
- Operating the engine in NEUTRAL must be avoided. During the first 50 hours, avoid operation below 2000 rpm.
- During the break-in period, carefully observe the engine oil pressure and engine temperature.
- During the break-in period, check the engine oil and coolant levels frequently.





## TROUBLESHOOTING INFORMATION

If your engine does not operate properly, refer to the troubleshooting chart or see your authorized Yanmar marine dealer or distributor.

Provide the authorized Yanmar marine dealer or distributor with the following information:

- Model name and serial number of your engine
- Boat name, hull material, size
- Use and type of boating
- Total number of operation hours (refer to hourmeter), age of boat
- Operating conditions when the problem occurred:
  - Engine rpm
  - Color of exhaust smoke
  - Type of diesel fuel
  - Type of engine oil
  - Any abnormal noises or vibration
- Operating environment such as high altitude or extreme ambient temperatures, etc.
- Engine maintenance history and previous problems
- Other factors that contribute to the problem

### Diagnostic Trouble Codes

When certain faults occur, or when certain limits have been exceeded, the engine ECU may generate a “Check Engine” warning or turn on a check engine light (if equipped). Some of these faults may also generate a DTC or Diagnostic Trouble Code and an audible alarm. If a DTC is generated, the engine ECU will store that code or codes for reference. To read the DTC codes, a special tool is used by the technician. The technician then can use a list to more quickly find the cause of the fault and correct it.

Some conditions will produce an alarm but do not generate a trouble code. An example is engine overheat (over 108˚C) caused by an obstructed seawater inlet. The overheat alarm will sound and the engine torque will be reduced to protect the engine, but no code will be set.

Under some conditions, the warning alarm will sound until the fault code is checked and corrected. Under other conditions, the alarm will be canceled if the engine is turned off and then restarted.

For further information, please contact your authorized Yanmar distributor or dealer.

## Engine Overheat

| Problem / Symptom | Cause | Action |
|---|---|---|
| Instrument Shows High Temperature | Clogged seawater inlet | Clean |
| | Low coolant level | Fill with coolant / inspect for leaks |
| | Clogged seawater filter (if equipped) | Clean |
| | Clogged hydraulic cooler | See your authorized Yanmar dealer or distributor |
| | Seawater pump worn or damaged | |
| | Defective sensor / instrument | |
| | Defective thermostat | |
| | Damaged closed coolant pump | |
| | Combustion gas leakage (causes loss of coolant) | |
| | Seawater pump belt slips or pump pulley loose on pump shaft | |
| | Clogged heat exchanger | |

## Engine Runs Cold

| Problem / Symptom | Cause | Action |
|---|---|---|
| Instrument Shows Low Temperature | Defective sensor / instrument | See your authorized Yanmar dealer or distributor |
| | Defective thermostat | |
| | Cabin heater or boiler too large | |

## Coolant Loss

| Problem / Symptom | Cause | Action |
|---|---|---|
| Repeated Low Coolant Level | Defective cylinder head gasket (external leakage) | See your authorized Yanmar dealer or distributor |
| | External leakage at connection | |
| Coolant Forced Out of Coolant Recovery Tank | Turbocharging pressure enters cooling system via leaking charge air cooler | See your authorized Yanmar dealer or distributor |
| | Defective cylinder head gasket (internal leakage) | |
| White Smoke when Engine Hot Indicates Water Vapor | Crack in cylinder head (not cracks between valve seats) | See your authorized Yanmar dealer or distributor |
| | Cracked cylinder wall | |
| | Leaking cylinder head gasket | |





# COMPONENT IDENTIFICATION

## Left Side - 4BY

**Figure 1**, **Figure 2** and **Figure 3** illustrate a typical version of a 4BY engine. Your engine may have different equipment from that illustrated.

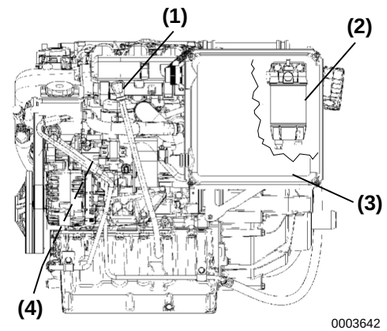


*Figure 1*

**1 – Engine Oil Dipstick**
**2 – Fuel Filter / Water Separator**
**3 – E-Box Panel**
**4 – High Pressure Fuel Pump**

## Right Side - 4BY

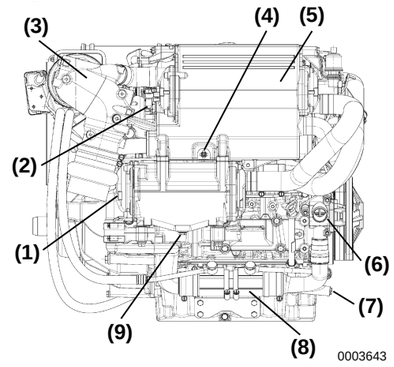


*Figure 2*

**1 – Zinc Anode**
**2 – Zinc Anode**
**3 – Exhaust / Water Mixing Elbow**
**4 – Coolant Drain Cock**
**5 – Heat Exchanger**
**6 – Seawater Pump**
**7 – Seawater Drain Cock**
**8 – Hydraulic Oil Cooler**
**9 – Water Drain Plug**

## Top View - 4BY

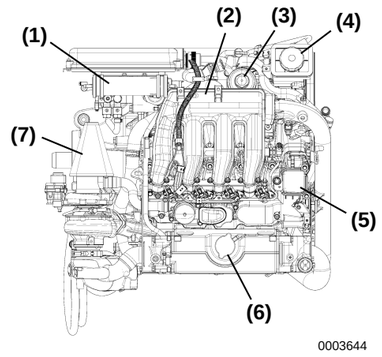


*Figure 3*

**1 – Fuel Fine Filter**
**2 – Intake Air Manifold**
**3 – Engine Oil Filter**
**4 – Power Steering Filler Port (if equipped)**
**5 – Engine Oil Filler Port**
**6 – Coolant Filler Port**
**7 – Air Filter**

## Left Side - 6BY

**Figure 4**, **Figure 5** and **Figure 6** illustrate a typical version of a 6BY engine. Your engine may have different equipment from that illustrated.

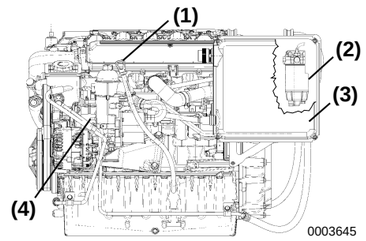


*Figure 4*

**1 – Engine Oil Dipstick**
**2 – Fuel Filter / Water Separator**
**3 – E-Box Panel**
**4 – High Pressure Fuel Pump**





## Vibration - Drive Engaged

| Problem / Symptom | Cause | Action |
|---|---|---|
| Rough at All Speeds | Engine and propeller shaft misaligned | See your authorized Yanmar dealer or distributor |
| | Leaking cylinder head gasket | |
| | Bent propeller shaft | |
| Rough at Higher Speeds | Bent propeller | See your authorized Yanmar dealer or distributor |
| | Slipping clutch / clutch dog | |
| | Incorrect injection pressure | |
| | Injection timing is incorrect | |

## Engine Knocks

| Problem / Symptom | Cause | Action |
|---|---|---|
| Excess Fuel Injected | Defective fuel injector | See your authorized Yanmar dealer or distributor |
| | High fuel injection pressure | |
| Noise Changes with Engine Load | Incorrect or poor quality fuel | Drain and refill tank with proper fuel |
| | Worn crankshaft / bearings | See your authorized Yanmar dealer or distributor |
| | Broken piston / rings | |

## Low Power Output

| Problem / Symptom | Cause | Action |
|---|---|---|
| Miscellaneous | Clogged air filter | Replace air filter |
| | Leaking cylinder head gasket | See your authorized Yanmar dealer or distributor |
| | Damaged turbocharger | |
| | Incorrect propeller | |
| | Excessive exhaust back pressure | |
| Fuel | Plugged fuel filter(s) | Replace as necessary |
| | Faulty fuel supply pump | See your authorized Yanmar dealer or distributor |
| Low Fuel Injection Pressure | Defective fuel pressure regulator / sensor | See your authorized Yanmar dealer or distributor |
| | Worn high-pressure fuel pump | |
| | Injection timing is incorrect | |
| Low RPM at Wide Open Throttle | Propeller pitch too great | See your authorized Yanmar dealer or distributor |
| | Engine overheated | |
| | Damaged turbocharger | |

## Exhaust Color

| Problem / Symptom | Cause | Action |
|---|---|---|
| White Smoke | Cold engine | Allow engine to warm to operating temperature |
| | | See your authorized Yanmar dealer or distributor |
| | Incorrect fuel | Replace fuel with correct type |
| | Defective (leaking) fuel injector | See your authorized Yanmar dealer or distributor |
| | Injection timing is incorrect | |
| White Smoke with Water Vapor | Leaking cylinder head gasket | See your authorized Yanmar dealer or distributor |
| | Leaking charge air cooler | |
| | Cracked cylinder head | |
| | Cracked cylinder | |
| Blue Smoke | Worn piston rings / cylinders | See your authorized Yanmar dealer or distributor |
| | Oil leak in turbocharger (oil present in intake manifold) | |
| | Damaged piston cooling nozzles | |
| Black Smoke Under Load | Clogged intake air filter | Replace or clean as necessary |
| | Incorrect valve timing | See your authorized Yanmar dealer or distributor |
| | Defective (leaking) fuel injector | |
| | Low charge air pressure | Clean or replace clogged air filter |
| | | See your authorized Yanmar dealer or distributor |
| | Excessive exhaust back pressure | See your authorized Yanmar dealer or distributor |
| | Plugged intake port(s) | See your authorized Yanmar dealer or distributor |

## Vibration - Drive Disengaged

| Problem / Symptom | Cause | Action |
|---|---|---|
| Rough at All Engine Speeds | Air in fuel system | Bleed fuel system |
| | Faulty fuel injector | See your authorized Yanmar dealer or distributor |
| | Leaking cylinder head gasket | |
| | Damaged intake or exhaust valves | |
| | Incorrect injection pressure | |





## Right Side - 6BY

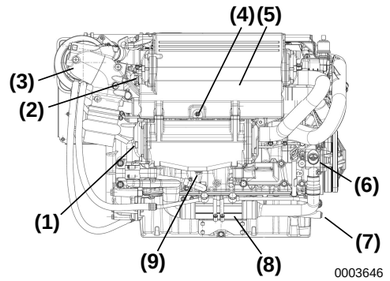


*Figure 5*

**1 – Zinc Anode**
**2 – Zinc Anode**
**3 – Exhaust / Water Mixing Elbow**
**4 – Coolant Drain Cock**
**5 – Heat Exchanger**
**6 – Seawater Pump**
**7 – Seawater Drain Cock**
**8 – Hydraulic Oil Cooler**
**9 – Water Drain Plug**

## Top View - 6BY

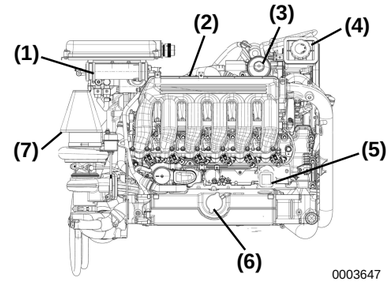


*Figure 6*

**1 – Fuel Fine Filter**
**2 – Intake Air Manifold**
**3 – Engine Oil Filter**
**4 – Power Steering Filler Port (if equipped)**
**5 – Engine Oil Filler Port**
**6 – Coolant Filler Port**
**7 – Air Filter**

## LOCATION OF NAMEPLATES

The engine data and drive information nameplates on Yanmar BY series engines are shown in **Figure 7**. Replace if damaged or lost.

The typical location of the engine name plate is shown for Yanmar 4BY Series marine engines **(Figure 7)**. 6BY engines are similar.

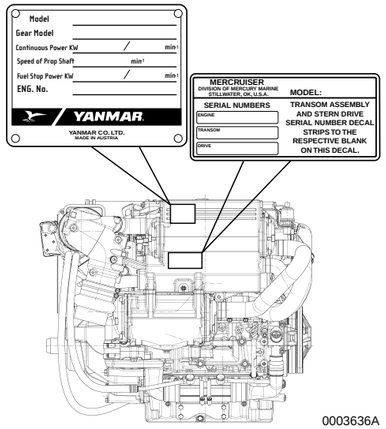


***Figure 7***

The engine block information is etched into the cylinder block behind the engine oil cooler near the end of the starting motor **(Figure 8)**.

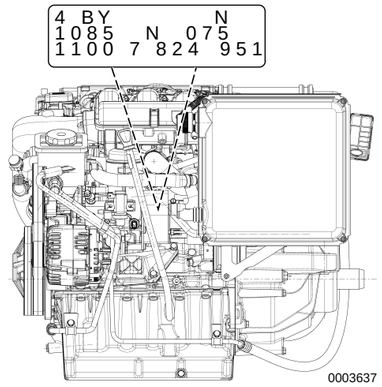


***Figure 8***



# TROUBLESHOOTING

If a problem occurs, stop the engine immediately. Refer to the Problem / Symptom column in the Troubleshooting Chart to identify the problem.

## TROUBLESHOOTING CHART

### Starting Trouble

| Problem / Symptom | Cause | Action |
|---|---|---|
| Engine Will Not Crank | Discharged battery | Charge / replace battery |
| | Blown fuse | Replace fuse |
| | Defective starter motor | See your authorized Yanmar dealer or distributor |
| | Loose wiring connections | Tighten connections |
| | Electrical panel power circuit breaker is tripped | Reset circuit breaker |
| Engine Cranks but Will Not Start | No fuel to engine | Check fuel level in tank |
| | | See your authorized Yanmar dealer or distributor |
| | No fuel to cylinders | Check fuel filter / water separator |
| | | Clean or replace clogged fuel fine filter |
| | | Bleed air from fuel system |
| | | Replace blown fuse (F3) |
| | | See your authorized Yanmar dealer or distributor |
| | Low ambient temperature | See your authorized Yanmar dealer or distributor |
| | Oil high | Replace with correct viscosity oil for operating conditions |

**This Page Intentionally Left Blank**





# FUNCTION OF MAJOR COMPONENTS

| Name of Component | Function |
|---|---|
| Fuel Filter / Water Separator | Removes dirt and water from the fuel. The filter element should be replaced periodically. *See Replacing Fuel Filter / Water Separator Element on page 48*. The water separator should be drained periodically. *See Draining the Fuel / Water Separator on page 30.* |
| Fuel Fine Filter | Removes extremely fine contaminants from fuel prior to entering fuel injection system. |
| Fuel Feed Pump | Pumps fuel from the tank to the fuel injection system. |
| Engine Oil Fill Port | To add engine oil. |
| Engine Oil Filter | Filters fine metal fragments and carbon from the engine oil. Filtered engine oil is distributed to the engine's moving parts. The filter is a cartridge type and the element should be replaced periodically. *See Changing the Engine Oil and Replacing the Engine Oil Filter on page 44*. |
| Coolant System | There are two cooling systems: 1) closed cooling with coolant and 2) seawater. The engine is cooled by the closed cooling system. The closed system coolant is cooled by seawater using a heat exchanger. The seawater also cools the marine gear or power steering oil, and the combustion intake air through cooler (s) in an open circuit. |
| Closed Cooling Circulation Pump | The centrifugal coolant pump circulates coolant inside the engine. The circulating pump is driven by a poly V-belt. |
| Seawater Pump | Pumps seawater from outside vessel to the engine. The seawater pump is belt-driven and has a replaceable rubber impeller. Avoid impeller damage, do not operate it without seawater. |
| Coolant Fill Cap | When the coolant temperature rises, the pressure inside the heat exchanger increases, causing the pressure valve in the filler cap to open, forcing hot water and steam through a rubber hose to the coolant recovery tank. When the engine becomes cool and the pressure inside the coolant recovery tank drops, the vacuum valve in the filler cap opens and the coolant in the coolant recovery tank returns to the heat exchanger through the hose and filler cap. This minimizes coolant consumption. |
| Coolant Recovery Tank | The coolant fill cap valve releases vapor and hot water overflow to the coolant recovery tank. When the engine stops and the coolant cools, the pressure in the heat exchanger drops. The fill cap valve then opens to send coolant back from the coolant recovery tank. This minimizes coolant consumption. The closed cooling system coolant level can easily be checked and refilled in this tank. |
| Oil Cooler - Engine | A heat exchanger that cools high temperature engine oil using engine coolant. |
| Oil Cooler - Hydraulic | A heat exchanger that cools the marine gear oil or power steering fluid using seawater. |
| Turbocharger | The turbocharger pressurizes the air coming into the engine. It is powered by a turbine that is driven by exhaust gases. |
| Air Filter | The air filter removes dirt from the intake combustion air reducing engine wear. |
| Nameplates | Nameplates are provided on the engine and the marine gear and have the model, serial number and other data. |

| Name of Component | Function |
|---|---|
| Electrical Panel (E-Box) | The electrical panel houses the engine electrical system fuses, relays, and ECU.<br><br>The ECU monitors data from the various sensors and controls such functions as low-pressure fuel pump operation, fuel injection pressure, fuel injection system volume, and the timing and volume of fuel injected by the Bosch electronic fuel injectors. Throttle control is fly-by-wire meaning it is controlled by electric signals from the helm. The throttle control is either analog or digital depending on the level of control options installed.<br><br>The ECU also uses sensor inputs to monitor engine condition and will set a trouble code if a system or sensor indicates a problem. In most cases, a Check Engine light will be displayed. The engine may or may not run normally depending on the fault. Not all inputs are monitored by the ECU. Low oil pressure and water in fuel are two examples. Either of these conditions will result in a warning indicator and possible audible alarm. Low oil pressure will also be indicated by the oil gauge at the helm (not available with Classic Controls). |
| Electrical Panel (E-Box) Circuit Breaker | The electrical panel circuit breaker is installed in the positive (+) cable of the electrical panel power lead, and provides overload protection for the electrical panel. The electrical panel power leads must be connected directly to the battery, and must have a breaker installed in the B+ (red) lead. |





## Every 2000 Hours of Operation

Perform the following maintenance every 2000 hours of operation or every 8 years, whichever comes first.

- **Replacing Seawater Pump Impeller**
- **Replacing Alternator Belt**

### Replacing Seawater Pump Impeller

See your authorized Yanmar marine dealer or distributor for replacement.

### Replacing Alternator Belt

See your authorized Yanmar marine dealer or distributor for replacement.

11. Pour coolant mix slowly into the heat exchanger to prevent the formation of air pockets. Fill until the heat exchanger is completely full. NOTICE: *Only use the engine coolant specified. Other engine coolants may affect warranty coverage, cause an internal buildup of rust and scale and / or shorten engine life. Prevent dirt and debris from contaminating engine coolant. Carefully clean the filler cap and the surrounding area before you remove the cap. NEVER mix different types of engine coolants. This may adversely affect the properties of the engine coolant.*
12. Install the pressure cap and tighten firmly. **WARNING! *Securely tighten the filler cap after checking the coolant level. Steam can escape during engine operation if the cap is loose.***
13. Remove the coolant recovery tank cap and fill with coolant mix to approximately 50 mm (2 in.) below the full line. Replace cap. Never fill to the full line.
14. After filling an empty cooling system, test-run the engine for about five minutes and check the engine coolant level at the recovery tank again.

## Every 1000 Hours of Operation

Perform the following maintenance every 1000 hours of operation or every 4 years, whichever comes first.

- **Checking Flexible Engine Mounts**

### Checking Flexible Engine Mounts

Check flexible engine mounts for damage, cracks or wear. See your authorized Yanmar marine dealer or distributor for replacement.





## FUSES AND RELAYS

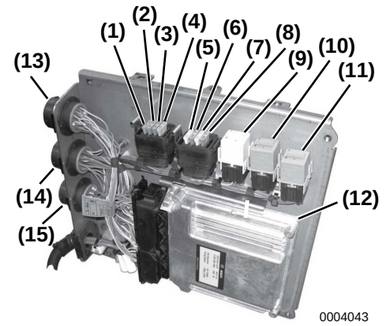


***Figure 9***

To access the fuse and relay panel, remove the four bolts from the E-Box cover and remove cover.

NOTICE: *The electrical panel cables must be connected directly to the battery, and must have a circuit breaker installed in the B + (red) lead.*

**1 – Fuse F1 (3 A) - CAN Switched Power**
**2 – Fuse F2 (10 A) - Ignition***
**3 – Fuse F3 (15 A) - Fuel Supply Pump**
**4 – Fuse F4 (30 A) - ECU Switched Power**
**5 – Fuse F5 (20 A) - Power to Sensors and Actuators**
**6 – Fuse F6 (10 A) - Auxiliary Power**
**7 – Jumper Fuse F7 (3 A) - Single / Port Selection, default is single / port (fuse in). Remove fuse for starboard configuration.**
**8 – Jumper Fuse F8 (3 A) - CAN / Analog Throttle Selection, default is analog (fuse out). Insert 3 A fuse to configure for CAN.**
**9 – K1 - Starter Relay**
**10 – K3 - Fuel Supply Pump Relay**
**11 – K2 - Main Power Relay**
**12 – ECU**
**13 – Connector X1 - Communication to Helm Display**
**14 – Connector X21/1 - Engine Wiring Harness**
**15 – Connector X22/1 - Fuel Injector Wiring Harness**

* NEVER connect any additional devices to F2. F6 may be used however, it is not switched.

## ENGINE COVER

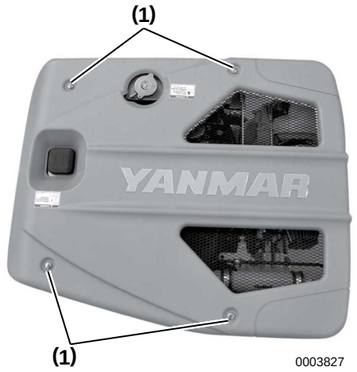


*Figure 10*

1. Turn screws **(Figure 10, (1))** one-quarter turn to loosen.
2. Lift cover off of engine.





## Every 500 Hours of Operation

Perform the following maintenance every 500 hours of operation or every 2 years, whichever comes first.

- **Checking the Fuel Pump and Fuel Lines**
- **Draining and Refilling Closed Cooling System (Engine Coolant)**

### Checking the Fuel Pump and Fuel Lines

See your authorized Yanmar dealer or distributor.

### Draining and Refilling Closed Cooling System (Engine Coolant)

1. Disconnect battery negative (-) cable.
2. Remove the engine cover.
3. Remove the coolant pressure cap from heat exchanger.
4. Remove the heat exchanger to access the cylinder block drain plug behind it.

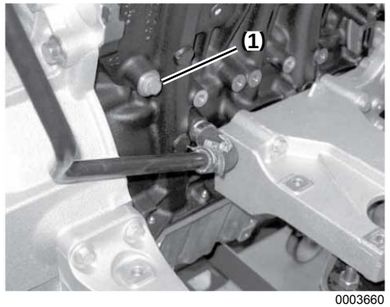


*Figure 11*

*Note: The charge air cooler has been removed for clarity of* ***Figure 11****.*

5. **WARNING!** ***NEVER remove the coolant filler cap if the engine is hot. Steam and hot engine coolant will escape and seriously burn you. Allow the engine to cool before attempting to remove the filler cap.*** Remove drain plug **(Figure 11, (1))** from the engine block. Allow coolant to drain into a container of appropriate size.
6. Install cylinder block drain plug with a new gasket.

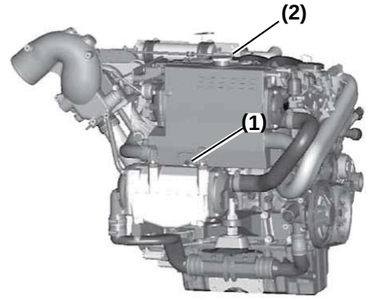


*Figure 12*

7. Install heat exchanger. Ensure the drain cock **(Figure 12, (1))** on the heat exchanger is closed.
8. Remove the pressure cap **(Figure 12, (2))** from the heat exchanger.
9. Inspect the cap gasket and flange on the filler neck for damage. Replace if necessary.
10. Check the rubber hose connecting the coolant recovery tank to the heat exchanger. Be sure the hose is securely connected and there is no damage.

### Replacing the Turbocharger Heat Shield

See your authorized Yanmar dealer or distributor.

### Checking Exhaust / Water Mixing Elbow

See your authorized Yanmar dealer or distributor.

### Replacing Air Filter Element

1. Turn engine OFF.
2. Remove engine cover.

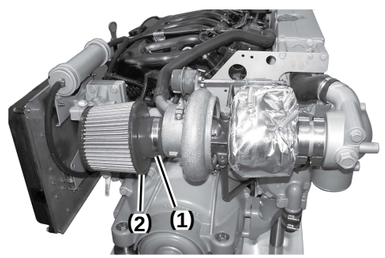


0003672

***Figure 10***

3. Remove clamp **(Figure 10, (1))**.
4. Remove air filter **(Figure 10, (2))**.
5. Replace air filter.

### Cleaning the Turbocharger Blower

See your authorized Yanmar dealer or distributor.

### Checking or Replacing Alternator Belt

*See Checking or Replacing the Seawater Pump and Alternator Belts on page 49*.

### Changing Power Steering Fluid

See your authorized Yanmar dealer or distributor.

### Checking Shift Cable Adjustment

*See Checking Shift Cable Adjustment on page 45*.

### Adjusting the Propeller Shaft Alignment

*See Adjusting Propeller Shaft Alignment (If Equipped with Marine Gear) on page 45*.

### Checking Hydraulic Oil Cooler

See your authorized Yanmar dealer or distributor.

### Checking or Replacing Rubber Hoses

Check rubber water and fuel hoses for wear or damage. See your authorized Yanmar dealer or distributor for replacement.

### Checking or Replacing Flexible Engine Mounts

Check the flexible engine mounts for wear or damage. See your authorized Yanmar dealer or distributor for replacement.



# BEFORE YOU OPERATE

This section of the *Operation Manual* describes the diesel fuel, engine oil, and engine coolant specifications and how to replenish them. It also describes the daily engine checkout.

## DIESEL FUEL

### Diesel Fuel Specifications

NOTICE: *Only use diesel fuels recommended by Yanmar for the best engine performance, to prevent engine damage and to comply with EPA warranty requirements. Only use clean diesel fuel.*

Diesel fuel should comply with the following specifications. The table lists several specifications for diesel fuels.

| DIESEL FUEL SPECIFICATION | LOCATION |
|---|---|
| **No. 2-D, No. 1-D, ASTM D975-94** | USA |
| **EN590:96** | European Union |

### Additional Technical Fuel Requirements

- The fuel cetane number should be equal to 48 or higher.
- The sulfur content must not exceed 0.3% by volume. Less than 0.05% is preferred.
- Water and sediment in the fuel should not exceed 0.05% by volume.
- Ash content not to exceed 0.01% by mass.
- Carbon residue content not to exceed 0.35% by volume. Less than 0.1% is preferred.
- Total aromatics content should not exceed 35% by volume. Less than 30% is preferred.
- PAH (polycyclic aromatic hydrocarbons) content should be below 10% by volume.
- NEVER mix kerosene, used engine oil or residual fuels with the diesel fuel.
- NEVER use Biocide or mix winter and summer fuels.
- Keep the fuel tank and fuel-handling equipment clean at all times.
- Poor-quality fuel can reduce engine performance and / or cause engine damage.
- Fuel additives are not recommended. Some fuel additives may cause poor engine performance. See your authorized Yanmar marine dealer or distributor for more information.
- Lubricity HFRR < 400 micrometer ISO 12156 (HFRR: High Frequency Reciprocating Rig).

### Diesel Fuel Lines

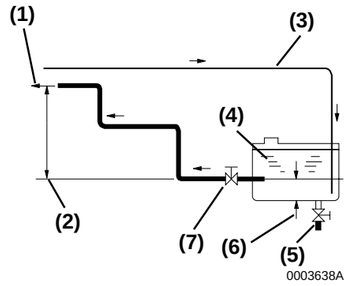


***Figure 1***

**1 – To Fuel Feed Pump**
**2 – Less Than 500 mm (19.68 in.)**
**3 – Fuel Return Line**
**4 – Fuel Tank**
**5 – Fuel Tank Drain Cock**
**6 – 20 - 30 mm (0.75 - 1.125 in.)**
**7 – Fuel Shutoff Valve**

Shown is a typical installation of a boat fuel system. Fuel supply **(Figure 1, (2))** and return **(Figure 1, (4))** lines connect to fittings at the engine.

Total suction resistance shall be less than 0.1 bar (40 in.Aq). High resistance may cause poor performance and reduce fuel system life.

*Note: Yanmar does not recommend installing additional fuel filtration before the engine. The engine is equipped with a fuel / water separation filter, plus a fine filter.*





14. Bleed air from the fuel system and check for leaks. *See Bleeding the Fuel System on page 21*.

### Checking the Fuel Injector Spray Pattern

See your authorized Yanmar dealer or distributor.

### Changing the Engine Oil and Replacing Engine Oil Filter Element

To change engine oil and replace the engine oil filter element, see *Changing the Engine Oil and Replacing the Engine Oil Filter on page 44*.

### Checking or Replacing the Seawater Pump and Alternator Belts

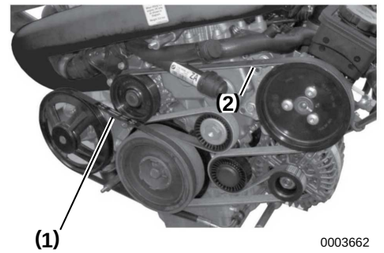


***Figure 8***

NOTICE: *NEVER get any oil on the belt(s). Oil on the belt causes slipping and stretching. Replace the belt if it is damaged.*

1. Disconnect battery negative (-) cable from the battery.
2. Remove belt guard.
3. Check the seawater pump belt **(Figure 8, (1))** and alternator belt **(Figure 8, (2))** for wear, cracks or damage.
4. Replace if necessary. See your authorized Yanmar dealer or distributor.
5. Install belt guard and connect battery negative (-) cable.

### Replacing the Zinc Anodes

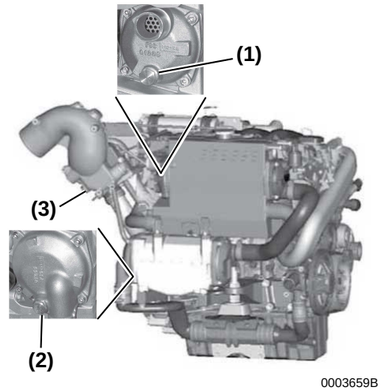


***Figure 9***

There are zinc anodes in the seawater cooling system and they should be inspected and replaced periodically.

Zinc anodes are located in the heat exchanger **(Figure 9, (1))** and the charge air cooler **(Figure 9, (2))**.

A zinc anode is also located in the optional high-rise elbow **(Figure 9, (3))**.

1. Disconnect battery negative (-) cable.
2. Remove each anode and inspect for corrosion. Any anode having less than half its original size remaining should be replaced.
   NOTICE: *NEVER use thread sealer or thread sealing tape when installing zinc anodes. Anodes must make good metal-to-metal contact to perform properly.*
3. Install each anode using a new copper gasket and tighten to 25 N·m (18 ft-lb).
4. Start engine and check for water leaks.

### Checking or Replacing the Seawater Pump Impeller

See your authorized Yanmar dealer or distributor.

### Replacing Fuel Filter / Water Separator Element

1. Disconnect the battery negative (-) cable.
2. Close the fuel tank cock.

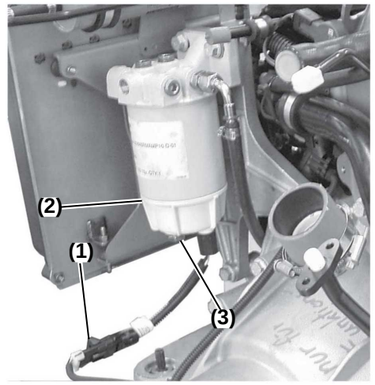


0003649

***Figure 6***

3. Loosen the drain plug **(Figure 6, (3))** on the bottom of the fuel filter / water separator and drain off any water or sediment.
4. Disconnect water sensor connector **(Figure 6, (1))**.
5. Turn the filter bowl **(Figure 6, (2))** counterclockwise to remove.
6. Remove the old filter element.

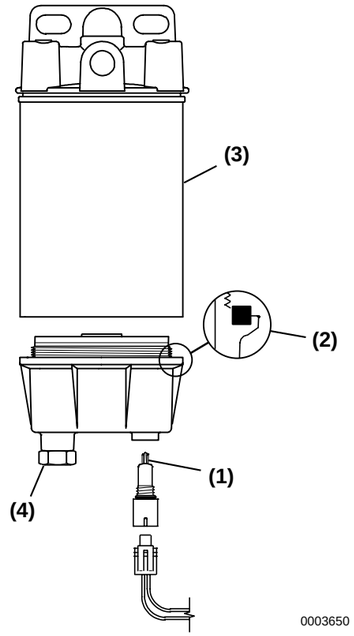


0003650

***Figure 7***

7. Clean the filter bowl. Inspect the water sensor probe **(Figure 7, (1))** for damage. Inspect the bowl seal **(Figure 7, (2))**.

   NOTICE: *When replacing fuel filters, always pre-fill them with fresh, clean fuel to improve the system's ability to be bled.*
8. Lubricate the seal at the top of the new filter element **(Figure 7, (3))** and install .
9. Lubricate the filter bowl seal and install the filter bowl. Turn clockwise by hand to tighten.
10. Ensure drain plug **(Figure 7, (4))** is securely tightened.
11. Connect water sensor connector.
12. Open the fuel cock.
13. Connect the battery negative (-) cable.





## Filling the Fuel Tank

NOTICE: *Operate bilge ventilation (blowers) for a minimum of 5 minutes to purge fumes from engine compartment after refueling. Never operate bilge blower while refueling. Doing so can pump explosive fumes into the engine compartment and result in an explosion.*

### To Fill the Fuel Tank:

NOTICE: *Only fill the fuel tank with diesel fuel. Filling the fuel tank with gasoline may result in a fire and will damage the engine.*

1. Clean the area around the fuel cap.
2. Remove the fuel cap from the fuel tank filler port.
3. NOTICE: *Hold the hose nozzle firmly against the filler port while filling. This prevents static electricity buildup which could cause sparks and ignite fuel vapors.* Stop fueling when the gauge shows the fuel tank is full. NOTICE: *NEVER overfill the fuel tank.*
4. Replace the fuel cap and hand-tighten. Over-tightening the fuel cap will damage it.

## Bleeding the Fuel System

The fuel system needs to be bled under the following conditions:

- Before starting the engine for the first time.
- After running out of fuel and fuel has been added to the fuel tank.
- After fuel system maintenance, such as changing the fuel filter and draining the fuel filter / water separator, or replacing a fuel system component.

The fuel feed pump is ECU-controlled and will operate for only 10 seconds when the key switch is turned ON while the engine is not running or being started. For this reason, the key switch must be repeatedly turned ON then OFF to sufficiently bleed the fuel system.

1. Turn the key switch on and leave on for 10 seconds. NOTICE: *NEVER hold the key in the START position for longer than 10 seconds or the starter motor will overheat.*
2. Turn key switch OFF for 5 seconds, then turn key switch ON for 10 seconds.
3. Repeat steps 1 and 2 five more times.

*Note: The engine may run rough and misfire for a few seconds when first started until any remaining air is purged from the fuel system.*

4. Attempt to start the engine. If the engine does not start within a reasonable time, repeat steps 1 and 2 until the engine starts and runs. NOTICE: *NEVER use an engine starting aid such as ether. Engine damage will result.*

# ENGINE OIL

## Engine Oil Specifications

Use a full-synthetic long-life engine oil that meets or exceeds the following guidelines and classifications:

### Service Categories

- API Service Categories SM, SL, SJ, SH/CF and CF
- ACEA Service Categories A3, B3 and B4

### Definitions

- API Classification (American Petroleum Institute)
- ACEA Classification (Association des Constructeurs Européens d'Automobilies)

*Note:*

1. *Be sure the engine oil, engine oil storage containers, and engine oil filling equipment are free of sediment and water.*
2. *Change the engine oil after the first 50 hours of operation and then at every 250 hours thereafter.*
3. *Select the oil viscosity based on the ambient temperature where the engine is being operated. See the SAE Service Grade Viscosity Chart.*
4. *Yanmar does not recommend the use of engine oil "additives."*

### Engine Oil Viscosity

Select the appropriate engine oil viscosity based on the ambient temperature shown in the SAE Service Grade Viscosity Chart **(Figure 2)**.

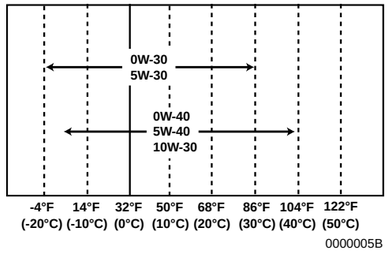


***Figure 2***

*Note: Yanmar recommends using genuine Yanmar Marine Oil specially formulated for the BY engine. Contact your authorized Yanmar dealer or distributor.*





### Draining the Fuel Tank

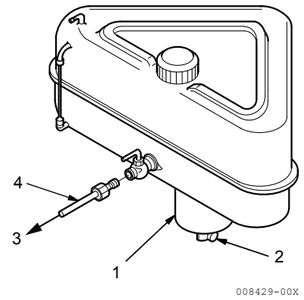


***Figure 4***

*Note: Typical fuel tank shown. Actual equipment may differ.*

1. Turn engine OFF.
2. Put a container under the drain cock **(Figure 4, (2))** to catch fuel.
3. Open the drain cock and drain water and sediment. Close the drain cock when the fuel is clean.
4. Dispose of waste properly.

### Replacing the Fuel Fine Filter

1. Disconnect the battery negative (-) cable.
2. Close the fuel tank cock.

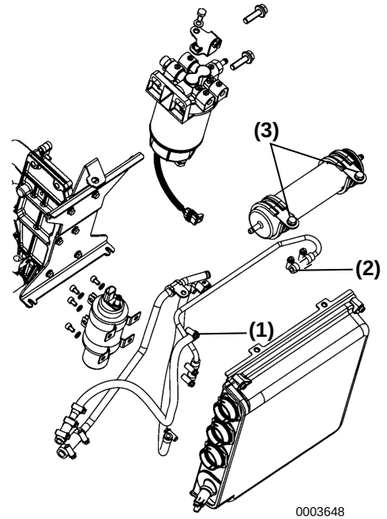


***Figure 5***

3. Loosen inlet **(Figure 5, (1))** and outlet **(Figure 5, (2))** hose clamps and remove hoses from filter.
4. Remove bolts **(Figure 5, (3))**.
5. Remove mounting brackets and install on new filter. Ensure fuel flow direction is correct. NOTICE: *When replacing fuel filters, always pre-fill them with fresh, clean fuel to improve the system's ability to be bled.*
6. Install on electrical bracket and tighten screws securely.
7. Install hoses and tighten new clamps to specification. *See Hose Clamps on page 70*.
8. Connect battery negative (-) cable.
9. Bleed the fuel system and check for leaks. *See Bleeding the Fuel System on page 21*.

3. NOTICE: *NEVER attempt to remove the covers or fill a maintenance-free battery.* Remove the caps and check the electrolyte level in all cells.
4. If the level is lower than the minimum fill level **(Figure 3, (1))**, fill with distilled water **(Figure 3, (2))** (available locally) up to the upper limit **(Figure 3, (3))** of the battery.

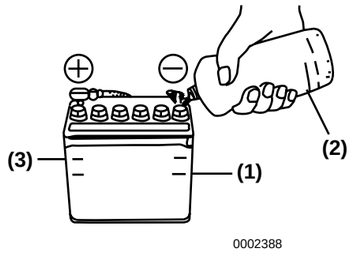


***Figure 3***

*Note: The maximum fill level is approximately 10 - 15 mm (3/8 - 9/16 in.) above the plates. Battery fluid tends to evaporate in high temperatures, especially in summer. In such conditions, inspect the battery more often.*

## Every 250 Hours of Operation

Perform the following maintenance every 250 hours of operation or yearly, whichever comes first.

- **Draining the Fuel Tank**
- **Replacing the Fuel Fine Filter**
- **Replacing the Fuel Filter / Water Separator Element**
- **Checking Fuel Injector Spray Pattern**
- **Changing the Engine Oil and Replacing the Engine Oil Filter Element**
- **Checking or Replacing the Seawater Pump Belt**
- **Replacing the Zinc Anodes**
- **Checking or Replacing the Seawater Pump Impeller**
- **Replacing the Turbocharger Heat Shield**
- **Checking the Exhaust / Water Mixing Elbow**
- **Replacing the Air Filter Element**
- **Cleaning the Turbocharger Blower**
- **Checking or Replacing the Alternator Belt**
- **Changing the Power Steering Fluid**
- **Checking the Shift Cable Adjustment**
- **Adjusting the Propeller Shaft Alignment**
- **Checking the Hydraulic Oil Cooler**
- **Checking or Replacing Rubber Hoses**
- **Checking Flexible Engine Mounts**





## Acceptable Engine Oil

**LongLife 01 Oils**

| Trade name | Producer/Supplier |
|---|---|
| Addinol Super power MV 0537 | Addinol Lube Oil GmbH |
| Agip Formula LL B 01 | ENI S.p.A. Refining and Marketing Division |
| Agip Sint 2000 Evolution | ENI S.p.A. Refining and Marketing Division |
| Agip TECSINT SL | ENI S.p.A. Refining and Marketing Division |
| ALPINE Longlife | Mitan Mineralöl GmbH |
| Aral SuperTronic B | Aral |
| Aral SuperTronic G | Aral |
| AXCL S-Class Motor Oil | AXCL Gulf FZE |
| BMW Quality Longlife 01 | BMW |
| BP Visco 7000 | BP Oil International |
| BP Visco 7000 GM | BP Oil International |
| BP Visco 7000 Turbo Diesel | BP Oil International |
| Castrol Edge | Castrol Limited |
| Castrol Formula RS Power and Protection | Castrol Limited |
| Castrol Formula SLX | Castrol Limited |
| Castrol Formula SLX LL01 | Castrol Limited |
| Castrol Formula SLX Long Tex | Castrol Limited |
| Castrol Formula SLX Turbodiesel | Castrol Limited |
| Castrol Syntec | Castrol Limited |
| Castrol Syntec 0W-30 European Formula | Castrol Limited |
| Castrol Super Racing 0W-40 | Castrol Limited |
| Castrol TXT Softec LL01 | Castrol Limited |
| Cepsa Star Mega Synthetic | Cepsa Lubricantes S.A. |
| Divinol Syntholight | Zeller+Gmelin |
| Elf Excellium Full-Tech | Total |
| Elf Excellium LDX | Total |
| Elf Excellium XLL | Total |
| Esso Ultron FE | ExxonMobil |
| Galp Formula XLD | Petrogal SA |
| Gulf Formula TLX | Total |
| Havoline Synthetic BM | Chevron Texaco |
| Havoline Ultra BM | Chevron Texaco |
| Igol Process Compact P | Igol France S.A. |
| INA Futura Compact P | INA Maziva Rijeka |
| Jet Top Level | ConocoPhillips GmbH |
| Labo RC | Fuchs Labo Auto S.A. |
| Liqui Moly Longtime High Tech | Liqui Moly |

| Trade name | Producer/Supplier |
|---|---|
| Megol Motorenöl New Generation | Meguin GmbH |
| Mobil 1 | ExxonMobil |
| Mobil 1 Turbo Diesel | ExxonMobil |
| Mobil 1 Spezial XS | ExxonMobil |
| Motorex Profile B-XL | Bucher AG |
| Motorex Select SP-X | Bucher AG |
| Motul Specific LL-01 | Motul S.A. |
| OMV full syn plus | OMV AG |
| Opaljet Longlife | Unil Opal |
| Panolin Exclusive BD | Panolin AG |
| Pennzoil European Formula Ultra | Pennzoil-Quaker State |
| Pentospeed 0W-30 VS* | Deutsche Pentosin-Werke |
| Petronas Syntium 3000 LL | Petronas |
| Q8 Formula Special | Kuwait Petroleum |
| Quaker State European Formula Ultra | Pennzoil-Quaker State |
| Ravenol HCL | Ravensburger Schmierstoffvertrieb GmbH |
| Repsol Elite Common Rail | Repsol YPF |
| Shell Helix Ultra AB | Shell International Petroleum Company |
| Shell Helix Ultra AL | Shell International Petroleum Company |
| Statoli LazerWay B | Statoil Lubricants |
| Tecar Motorenöl Supersyn | Techno-Einkauf GmbH |
| Titan Supersyn SL | Fuchs Petrolub AG |
| Titan Supersyn SL Longlife | Fuchs Petrolub AG |
| Tor Synthetic LL | De Oliebron |
| Total Activa Expertise 9000 | Total |
| Total Quartz Expertise 9000 | Total |
| Valvoline SynPower MXL | Valvoline |
| Veedol Powertron LL01 | Veedol International |
| Veedol Syntron | Veedol International |
| Veritas Syntolube | Ölwerke Julius Schindler GmbH |
| Wako's Super Synthe | Wako Chemical Co.Ltd |
| Wintershall VIVA 1 Longlife | SRS Schmierstoff Vertrieb GmbH |
| Yacco VX 1600 | Yacco S.A.S. |





11. Fill with new engine oil. *See Adding Engine Oil on page 26*.
    NOTICE: *NEVER mix different types of engine oil. This may adversely affect the lubricating properties of the engine oil. NEVER overfill. Overfilling may result in white exhaust smoke, engine overspeed or internal damage.*
12. Perform a trial run and check for oil leaks.
13. Approximately 10 minutes after stopping the engine, remove the oil dipstick and check the oil level. Add oil if the level is too low.

### Checking Shift Cable Adjustment

See your authorized Yanmar dealer or distributor.

### Adjusting Propeller Shaft Alignment (If Equipped with Marine Gear)

The flexible engine mounts are slightly compressed during initial engine operation and may cause misalignment between the engine and the propeller shaft.

This adjustment requires specialized knowledge and techniques. See your authorized Yanmar dealer or distributor.

## Every 50 Hours of Operation

After you complete the initial 50 hour maintenance procedures, perform the following procedures every 50 hours or monthly, whichever comes first.

- **Checking Seawater Filter (If Equipped) and Inlet**
- **Checking the Air Intake Pipes**
- **Checking Battery Electrolyte Level (Serviceable Batteries Only)**

### Checking the Seawater Filter (If Equipped) and Inlet

Refer to boat builder's literature for information on the seawater filter.

### Checking the Air Intake Pipes

Check the air intake system for damage or wear. If necessary, consult your authorized Yanmar dealer or distributor for repair.

### Checking the Battery Electrolyte Level (Serviceable Batteries Only)

**WARNING!** ***Batteries contain sulfuric acid. NEVER allow battery fluid to come in contact with clothing, skin or eyes. Severe burns could result. ALWAYS wear safety goggles and protective clothing when servicing the battery. If battery fluid contacts the eyes and / or skin, immediately flush the affected area with a large amount of clean water and obtain prompt medical treatment.***

NOTICE: *NEVER turn off the battery switch (if equipped) or short the battery cables during operation. Damage to the electric system will result.*

1. Turn the battery master switch OFF (if equipped) or disconnect the negative (-) battery cable.
2. Do not operate with insufficient battery electrolyte as the battery will be destroyed.

# PERIODIC MAINTENANCE PROCEDURES

## After Initial 50 Hours of Operation

Perform the following maintenance procedures after the initial 50 hours of operation.

- **Changing the Engine Oil and Replacing the Engine Oil Filter**
- **Checking Shift Cable Adjustment**
- **Adjusting the Propeller Shaft Alignment (If Equipped with Marine Gear)**

### Changing the Engine Oil and Replacing the Engine Oil Filter

The engine oil on a new engine becomes contaminated from the initial break-in of internal parts. It is very important that the initial oil replacement is performed as scheduled.

It is easiest and most effective to drain the engine oil after operation while the engine is still warm. **WARNING!** ***If you must drain the engine oil while it is still hot, stay clear of the hot engine oil to avoid being burned. ALWAYS wear eye protection.***

1. Turn engine OFF.
2. Remove engine cover.

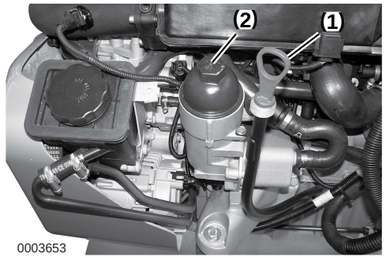


***Figure 1***

3. NOTICE: *Prevent dirt and debris from contaminating engine oil. Carefully clean the dipstick and the surrounding area before you remove the cap.*Loosen the engine oil filter cap **(Figure 1, (2))** 1 - 2 turns with a socket wrench. Allow to sit a few minutes to allow oil to drain into crankcase.
4. Remove the engine oil dipstick **(Figure 1, (1))**. Attach an oil drain pump and pump out the oil. Dispose of waste properly.
5. Remove the engine oil filter cap and filter assembly.
6. Remove the filter element from stem.

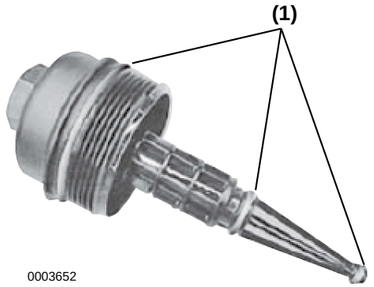


***Figure 2***

7. Replace the three O-rings **(Figure 2, (1))** on the stem.
8. Install a new filter element. Ensure the filter fits snugly in the filter cap.
9. Install the cap and filter assembly. Tighten cap by hand until the seal touches the housing.
10. Tighten to 25 N·m (225 in.-lb).





**LongLife 04 Oils**

| Trade name | Producer/Supplier |
|---|---|
| Addinol Super power MV 0537 | Addinol Lube Oil GmbH |
| Agip Formula MS B04 | ENI S.p.A. |
| Aral SuperTronic | Aral |
| BMW Longlife-04 | BMW |
| Castrol Edge Sport | Castrol Limited |
| Castrol Edge Turbo Diesel | Castrol Limited |
| Castrol Formula RS | Castrol Limited |
| Castrol GTX Magnatec | Castrol Limited |
| Castrol SLX LL-04 | Castrol Limited |
| Castrol TXT LL-04 | Castrol Limited |
| Elf Excellium LSX | Total |
| Galp Energy Ultra LS | Petrogal SA |
| Liqui Moly TopTec 4100 | Liqui Moly |
| Midland ® Synova | Oel-Brack AG |
| Midland ® Synova | Oel-Brack AG |
| Mobil 1 ESP Formula | ExxonMobil |
| Motorenöl Low Emission | Meguin GmbH |
| Motul 1 Specific LL-04 | Motul S.A. |
| OMV eco plus | OMV AG |
| Repsol Elite Evolution | Repsol YPF |
| Shell Helix Ultra AP | Shell International Petroleum Company |
| Titan GT1 | Fuchs Petrolub AG |
| Wintershall VIVA 1 topsynth alpha LS | SRS Schmierstoff Vertrieb GmbH |
| York 848 | Ginouves SAS |

## Checking Engine Oil

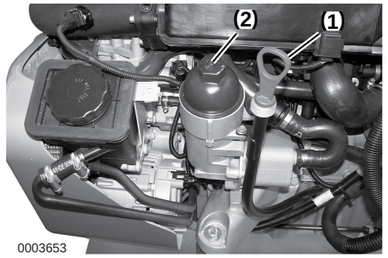


***Figure 3***

*Note: 4BY series shown. 6BY is similar.*

1. NOTICE: *Prevent dirt and debris from contaminating engine oil. Carefully clean the dipstick and the surrounding area before you remove the cap.*Clean area around dipstick.
2. Remove dipstick **(Figure 3, (1))** and wipe with clean cloth.
3. Fully reinsert dipstick.

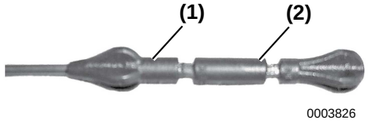


***Figure 4***

4. Remove dipstick. The oil level should be between upper **(Figure 4, (1))** and lower lines **(Figure 4, (2))** on the dipstick.
5. Fully reinsert dipstick.

## Adding Engine Oil

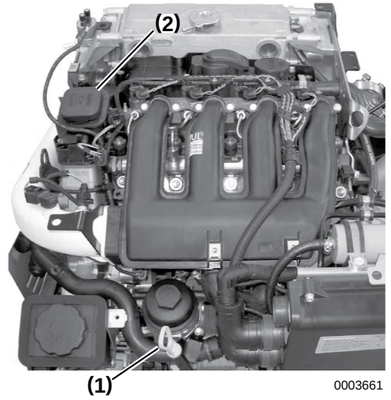


***Figure 5***

*Note: 4BY series shown. 6BY is similar.*

1. Remove the oil filler port cap **(Figure 5, (2))** and pour engine oil into filler port. *See Engine Oil Specifications on page 22*.
2. Fill with oil to the upper limit on the dipstick **(Figure 5, (1))**. NOTICE: *NEVER overfill the engine with engine oil.*
3. Fully insert the dipstick to check the level. NOTICE: *ALWAYS keep the oil level between upper and lower lines on the dipstick.*
4. Tighten the fill port cap securely by hand.





## Inspection and Maintenance for EPA Emission-Related Parts

| Parts | Interval |
|---|---|
| Clean fuel injection nozzle | 1500 hours |
| Check fuel injection nozzle pressure and spray pattern | 3000 hours |
| Check fuel injection pump adjustment | |
| Check turbocharger adjustment (if equipped) | |
| Check electronic engine control unit (ECU) and its associated sensors and actuators | |

*Note: The inspection and maintenance items shown above to be performed at your Yanmar dealer or distributor.*

○: Check or Clean ◇: Replace ●: Contact your authorized Yanmar marine dealer or distributor

| System | Item | Periodic Maintenance Interval | | | | | |
|---|---|---|---|---|---|---|---|
| | | Daily | Every 50 hours or monthly whichever comes first | Every 250 hours or one year whichever comes first | Every 500 hours or 2 years whichever comes first | Every 1000 hours or 4 years whichever comes first | Every 2000 hours or 8 years whichever comes first |
| Electrical System | Check the electrolyte level in the battery (serviceable batteries only) | | ● | | | | |
| | Check the wiring connectors | ○ Before starting | | | | | |
| | Check alternator belt for wear, replace if necessary | | | ○ | | | ● |
| Miscellaneous Items | Check the alarm and indicators (if equipped) | ○ | | | | | |
| | Check or change power steering fluid | ● | | ● | | | |
| | Check for water or oil leakage | ○ Before starting | | | | | |
| | Check shift cable adjustment | | ● Initial 50 | ● | | | |
| | Adjust the propeller shaft alignment (if equipped with marine gear) | | ● Initial 50 | ● | | | |
| | Check hydraulic oil cooler | | | ● | | | |
| | Check and replace rubberized hoses (fuel and water) | | | ● | | | |
| | Check flexible engine mounts | | | ○ | | ● | |

* Check zinc anodes periodically. Any anode having less than half its original size remaining should be replaced - use this to establish a regular replacement interval.

*Note: These procedures are considered normal maintenance and are performed at the owner's expense.*





## MARINE GEAR OR STERN DRIVE OIL

Refer to the instruction book for each marine gear or stern drive.

## POWER STEERING FLUID SPECIFICATIONS

Refer to the stern drive manufacturer's literature for power steering fluid specifications.

### Checking Power Steering Fluid Level

1. Remove power steering filler cap.

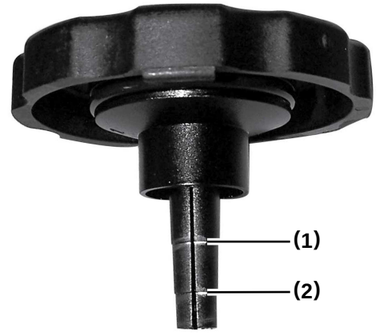


***Figure 6***

2. Power steering fluid level must be between the upper **(Figure 6, (1))** and lower **(Figure 6, (2))** level marks.
3. Add fluid if necessary.

# ENGINE COOLANT

## Acceptable Engine Coolant

| Trade Name | Manufacturer |
|---|---|
| Addinol Antifreeze Super | Addinol Lube Oil GmbH |
| Aral Antifreeze Extra | Aral AG |
| AVIA Antifreeze APN | AVIA Mineralöl AG |
| BMW Coolant | BMW AG |
| BP anti-frost X 2270A | BP Schmierstoff GMBH, Hamburg |
| Caltex CX Engine Coolant | Caltex |
| Castrol ANTI-FREEZE NF | Castrol International |
| Fridex G48 | Velena s.a. |
| Glacelf Plus | Total |
| GlycoShell | Shell International |
| Glyco star | Bremin Mineralöl GmbH & Co. |
| Glysantin G48-24 Engine Coolant | UNICO Ltd. |
| Glysantin Protect Plus / G48 | BASF |
| GUSOFROST LV 505 | Chemische Industrielle Gesellschaft |
| Mobil Frostchutz 600 | Mobil Schmierstoff GmbH |
| Havoline AFC (BD04) | Chevron Texaco/Arteco |
| Mobil Frostschutz 600 | ExxonMobil |
| OMV Kühlerfrostschutz | OMV AG |
| Total Thermofreeze Plus | Total |

*Note: Yanmar recommends using genuine Yanmar antifreeze / coolant. Contact your authorized Yanmar dealer or distributor.*





○: Check or Clean ◊: Replace ●: Contact your authorized Yanmar marine dealer or distributor

| System | Item | Periodic Maintenance Interval | | | | | |
|---|---|---|---|---|---|---|---|
| | | Daily | Every 50 hours or monthly whichever comes first | Every 250 hours or one year whichever comes first | Every 500 hours or 2 years whichever comes first | Every 1000 hours or 4 years whichever comes first | Every 2000 hours or 8 years whichever comes first |
| Cooling System - Seawater Circuit | Visual inspection of cooling system | ○ Before starting | | | | | |
| | Check the seawater outlet | ○ Before starting | | | | | |
| | Check seawater pump belt for wear, replace if necessary | | | ◊ | | | |
| | Check seawater filter (if equipped) and inlet | | ○ | | | | |
| | Replace the zinc anodes | | | ◊ | | | |
| | Check or replace the seawater pump impeller | | | ● | | | ● |
| Air Intake and Exhaust System | Visual inspection | ○ Before starting | | | | | |
| | Replace turbocharger heat shield | | | ◊ | | | |
| | Check the exhaust pipe | ○ | | | | | |
| | Check the air intake pipes | | ○ | | | | |
| | Check the exhaust / water mixing elbow | | | ● | | | |
| | Replace the air filter element | | | ● | | | |

○: Check or Clean ◇: Replace ●: Contact your authorized Yanmar marine dealer or distributor

| System | Item | Periodic Maintenance Interval | | | | | |
|---|---|---|---|---|---|---|---|
| | | Daily | Every 50 hours or monthly whichever comes first | Every 250 hours or one year whichever comes first | Every 500 hours or 2 years whichever comes first | Every 1000 hours or 4 years whichever comes first | Every 2000 hours or 8 years whichever comes first |
| Whole | Visual inspection of engine exterior | ○ Before starting | | | | | |
| Fuel System | Check for fuel leakage | ○ Before starting | | | | | |
| | Check the fuel level and refill if necessary | ○ Before starting | | | | | |
| | Drain water and sediment from fuel tank | | | ○ | | | |
| | Drain the fuel filter / water separator If necessary | ○ | | | | | |
| | | | | | | | |
| | Replace the fuel fine filter | | | ◇ | | | |
| | Replace fuel filter / water separator element | | | ◇ | | | |
| | Check the fuel pump and fuel lines | | | | ● | | |
| Lubricating System | Check the engine oil level and refill if necessary | ○ Before starting | | | | | |
| | Change the engine oil and replace the oil filter element | | ◇ Initial 50 | ◇ | | | |
| Cooling System - Engine Coolant | Visual inspection of cooling system | ○ Before starting | | | | | |
| | Check coolant level and check for leaks | ○ Before starting | | | | | |
| | Replace coolant | | | | ◇ | | |





# DAILY CHECKS

Before heading out for the day, make sure the Yanmar engine is in good operating condition. **CAUTION!** ***It is important to perform daily checks as listed in this Operation Manual.*** Make sure you check the following items:

## Visual Checks

- Check the exterior of the engine for leaks, wear or damage.
- Check for engine oil leaks.
- Check for fuel leaks.
- Check for engine coolant leaks.
- Check for damaged or missing parts.
- Check for loose, missing, or damaged fasteners.
- Check the seawater inlet and outlet for blockage or damage.
- Check the electrical harnesses for cracks, abrasions, and damaged or corroded connectors.
- Check hoses for cracks, abrasions, and damaged, loose or corroded clamps.

**CAUTION!** ***If any problem is noted during the visual check, the necessary corrective action should be taken before you operate the engine.***

## Checking Diesel Fuel, Engine Oil and Engine Coolant Levels

Follow the procedures in *Filling the Fuel Tank on page 21* and *Checking Engine Oil on page 26* to check these levels.

## Checking the Battery Electrolyte Level

Check the battery electrolyte level before use. *See Checking the Battery Electrolyte Level (Serviceable Batteries Only) on page 45*.

## Checking the Alarm Indicators

Check the instruments and alarm indicators at regular intervals.

## Preparing Fuel, Oil and Coolant in Reserve

Prepare sufficient fuel for the day's operation. Always store engine oil and coolant in reserve (for at least one refill) on board, to be ready for emergencies.

## Checking Power Steering Fluid

*See Checking Power Steering Fluid Level on page 27*.

## Draining the Fuel / Water Separator

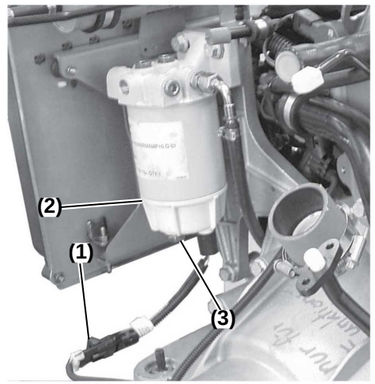


0003649

*Figure 7*

Check the fuel filter / water separator for presence of water and contaminants. If you find any water or contaminants, drain the fuel filter / water separator. If you have to drain the fuel filter / water separator frequently, drain the fuel tank and check for water in your fuel supply. *See Draining the Fuel Tank on page 47*.

1. Turn engine OFF.
2. Ensure the fuel cock is closed.
3. Loosen the drain plug **(Figure 7, (3))** at the bottom of the fuel filter / water separator and drain off any water or sediment.
4. Dispose of waste properly.
5. Tighten the drain plug and open the fuel cock.





# PERIODIC MAINTENANCE SCHEDULE

Daily and periodic maintenance is important to keep the engine in good operating condition. The following is a summary of maintenance items by periodic maintenance intervals. Periodic maintenance intervals vary depending on engine application, loads, diesel fuel and engine oil used and are hard to establish definitively. The following should be treated only as a general guideline.

**CAUTION!** ***Establish a periodic maintenance plan according to the engine application and make sure you perform the required periodic maintenance at intervals indicated. Failure to follow these guidelines will impair the engine's safety and performance characteristics, shorten the engine's life and may affect the warranty coverage on your engine. See your authorized Yanmar marine dealer or distributor for assistance when checking items marked with a ●.***

## EPA REQUIREMENTS

The EPA emission regulation is applicable only in USA.

### Conditions to Ensure Compliance with EPA Emission Standards

This product is an EPA-approved engine.

The following are the conditions that must be met in order to ensure that the emissions during operation meet the EPA standards. Be sure to follow these:

The operating conditions should be as follows:

- Ambient temperature: -16˚ to +40˚C (3˚ to 104˚F)
- Relative humidity: 80% or lower
- Permissible value for exhaust back pressure:
  - 4BY: 18.0 kPa (1835 mmAq) or lower
  - 6BY: 20.0 kPa (2039 mmAq) or lower
- Permissible value for air inlet restriction: 2.5 kPa

The fuel and lubricating oil used should be as follows:

- Diesel fuel: ASTM D975 No. 1–D or No. 2–D, or equivalent (minimum cetane No. 45)
- Lubricating oil: Type API, Class SM, SL, SJ, SH/CF and CF

Be sure to perform inspections as outlined in *Periodic Maintenance Procedures on page 44* and keep a record of the results.

Pay particular attention to these important points:

- Replacing the engine oil
- Replacing the lube oil filter
- Replacing the fuel filter
- Cleaning the air filter

*Note: Inspections are divided into two sections in accordance with who is responsible for performing the inspection: the user or the maker.*

### Inspection and Maintenance

*See Inspection and Maintenance for EPA Emission-Related Parts on page 43*. Inspection and maintenance procedures not shown in the *Inspection and Maintenance for EPA Emission-Related Parts* section are covered in *Periodic Maintenance Schedule on page 39*.

This maintenance must be performed to keep the emission values of your engine in the standard values during the warranty period. The warranty period is determined by the age of the engine or the number of hours of operation. *See Yanmar Co., Ltd. Limited Emission Control System Warranty - USA Only on page 71*.



# ENGINE OPERATION

**⚠ WARNING**

**Fire and Explosion Hazard**



Avoid serious personal injury. NEVER jump-start the engine. Sparks caused by shorting the battery to the starter terminals may cause a fire or explosion. ONLY use the key switch to start the engine.

**Sudden Movement Hazard**

Be sure the boat is in open water away from other boats, docks or other obstructions before increasing rpm. Avoid unexpected equipment movement. Shift the marine gear into the NEUTRAL position any time the engine is at idle.

To prevent accidental equipment movement, NEVER start the engine in gear.

**Sever Hazard**



Keep children and pets away while the engine is operating.

**Exhaust Hazard**



Avoid serious injury or death. NEVER block windows, vents or other means of ventilation if the engine is operating in an enclosed area. All internal combustion engines create carbon monoxide gas during operation and special precautions are required to avoid carbon monoxide poisioning.

**NOTICE**

If any indicator illuminates during engine operation, stop the engine immediately. Determine the cause and repair the problem before you continue to operate the engine. If the alarm window with audible alarm fails to display and go out about three seconds later when the ignition switch is in the ON position, see your authorized Yamar marine dealer or distributor for service before operating the engine.

---

Observe the following environmental operating conditions to maintain engine performance and avoid premature engine wear:

- Avoid operating in extremely dusty conditions.
- Avoid operating in the presence of chemical gases or fumes.
- NEVER run the engine if the ambient temperature is above +40˚C (+104˚F) or below -16˚C (+5˚F).
- If the ambient temperature exceeds +40˚C (+104˚F), the engine may overheat and cause the engine oil to break down.
- If the ambient temperature is below -16˚C (+5˚F), rubber components such as gaskets and seals will harden causing premature engine wear and damage.
- Contact your authorized Yanmar marine engine dealer or distributor if the engine will be operated outside of this standard temperature range.

---

NEVER engage the starter motor while the engine is running. Damage to the starter motor pinion and / or ring gear will result.





# PRECAUTIONS

## The Importance of Periodic Maintenance

Engine deterioration and wear occur in proportion to the length of time the engine has been in service and the conditions the engine is subjected to during operation. Periodic maintenance prevents unexpected downtime, reduces the number of accidents due to poor machine performance and helps extend the life of the engine.

## Performing Periodic Maintenance

**WARNING!** ***NEVER block windows, vents, or other means of ventilation if the engine is operating in an enclosed area. All internal combustion engines create carbon monoxide gas during operation. Accumulation of this gas within an enclosure could cause illness or even death. Make sure that all connections are tightened to specifications after repair is made to the exhaust system. Failure to comply could result in death or serious injury.***

## The Importance of Daily Checks

Periodic Maintenance Schedules assume that the daily checks are performed on a regular basis. Make it a habit of performing daily checks before the start of each operating day. *See Daily Checks on page 29*.

## Keep a Log of Engine Hours and Daily Checks

Keep a log of the number of hours the engine is run each day and a log of the daily checks performed. Also note the date, type of repair (e.g., replaced alternator), and parts used for any service needed between the periodic maintenance intervals. Periodic maintenance intervals are every 50, 250, and 500 engine hours. Failure to perform periodic maintenance will shorten the life of the engine.

## Yanmar Replacement Parts

Yanmar recommends that you use genuine Yanmar parts when replacement parts are needed. Genuine replacement parts help ensure long engine life.

## Tools Required

Before you start any periodic maintenance procedure, make sure you have the tools you need to perform all of the required tasks.

## Ask Your Authorized Yanmar Marine Dealer or Distributor For Help

Our professional service technicians have the expertise and skills to help you with any maintenance or service related procedures.

## Required EPA Maintenance

To maintain optimum engine performance and compliance with the Environmental Protection Agency (EPA) Regulations Engines, it is essential that you follow the *Periodic Maintenance Schedule on page 39* and *Periodic Maintenance Procedures which start on page 44*.

**▲ WARNING**

**Shock Hazard**



Avoid serious personal injury or equipment damage. ALWAYS turn off the battery switch (if equipped) or disconnect the negative battery cable before servicing the equipment.

---

Avoid personal injury or equipment damage. ALWAYS keep the electrical connectors and terminals clean. Check the electrical harnesses for cracks, abrasions, and damaged or corroded connectors.

***NOTICE***

Any part which is found defective as a result of inspection, or any part whose measured value does not satisfy the standard or limit, must be replaced.

---

Modifications may impair the engine's safety and performance characteristics and shorten the engine's life. Any alterations to this engine may void its warranty. Be sure to use Yanmar genuine replacement parts.





## STARTING THE ENGINE

NOTICE: *If the vessel is equipped with a water lift (water lock) muffler, excessive cranking could cause sea water to enter the cylinders and damage the engine. If the engine does not start after cranking for 10 seconds, close the thru-hull water intake valve to avoid filling the muffler with water. Crank for 10 seconds or until the engine starts. When the engines does start, stop the engine immediately and press the switch to the OFF position.*

1. Open the seacock (if equipped).
2. Open the fuel cock.
3. Turn the battery master switch (if equipped) ON.
4. Put remote control handle in NEUTRAL.
5. Ensure lanyard is connected to emergency stop switch.
6. Attach lanyard to clothing.
7. Turn key switch to ON. Ensure that the instrument panel indicators are powered and working. **CAUTION! *NEVER hold the key in the START position for longer than 10 seconds or the starter motor will overheat.***
8. Turn key switch to START. Release the key switch when the engine has started.

### Starting at Low Temperatures

NOTICE: *NEVER use an engine starting aid such as ether. Engine damage will result.* Comply with local environmental requirements. Use optional glow plugs (if equipped) to avoid starting problems and white smoke.

To limit white smoke, run the engine at low speed and under moderate load until the engine reaches normal operating temperature. A light load on a cold engine provides better combustion and faster engine warm-up than no load.

Avoid running the engine at idling speed any longer than necessary.

## SHUTTING DOWN THE ENGINE

Under normal operating conditions, shut down the engine by turning the key switch to OFF.

There will be a delay of up to 3 seconds after turning the key to OFF. This is normal and allows the ECU computer to store data. Wait at least 10 seconds after the engine stops before turning the battery master switch to OFF.

### Emergency Shut Down

NOTICE: *NEVER use the emergency stop switch for a normal engine shut-down. Use this switch only when stopping the engine suddenly in an emergency.*

1. Ensure lanyard is connected to the emergency stop switch.
2. Attach the lanyard to a secure place on the operator's clothing or life vest - not where it might tear away.
   NOTICE: *Do not cut or re-tie the lanyard. If it is too long, shorten it by knotting or looping it. Test the emergency engine shut off switch before each outing.*
3. Disconnecting the clip from the stop switch will stop the engine.

NOTICE: *Be sure to close the seacock. Neglecting to close the seacock could allow water to leak into the boat and may cause it to sink.*

## CHECKING THE ENGINE AFTER OPERATION

- Check that the key switch is in the OFF position and battery master switch (if equipped) is OFF.
- Fill the fuel tank. Make sure that the fill cap and the area around the fill opening are clean to avoid contamination of the fuel.
- Close seawater cock(s).
- If there is a risk of freezing, check that the cooling system contains enough coolant. *See Engine Coolant on page 28*.
- If there is a risk of freezing, drain the seawater system. *See Draining the Seawater Cooling System on page 66*.



# PERIODIC MAINTENANCE

## SAFETY PRECAUTIONS

**⚠ WARNING**

**Crush Hazard**



If you need to transport an engine for repair, have a helper assist you attach it to a hoist and load it on a truck.

---

Avoid personal injury or equipment damage. The engine lifting eyes are engineered to lift the weight of the marine engine only. ALWAYS use the engine lifting eyes when lifting the engine.

---

Avoid serious personal injury. Additional equipment is necessary to lift the marine engine and marine gear together. ALWAYS use lifting equipment with sufficient capacity to lift the marine engine.

**Welding Hazard**

Make welding repairs safely.

- ALWAYS turn off the battery switch (if equipped) or disconnect the negative battery cable and the leads to the alternator when welding on the equipment.
- Remove the multi-pin connector to the engine control unit. Connect the weld clamp to the component to be welded and as close as possible to the welding point.
- NEVER connect the weld clamp to the engine or in a manner which would allow current to pass through a mounting bracket.
- When welding is completed, reconnect the leads to the alternator and engine control unit prior to reconnecting the batteries.

---

**Exhaust Hazard**



Avoid serious injury or death. ALWAYS ensure that all connections are tightened to specifications after repair is made to the exhaust system. All internal combustion engines create carbon monoxide gas during operation and special precautions are required to avoid carbon monoxide poisioning.