YAMAHA

Marine

Outboards

50G, 60F, 70B, 75C, 90A

SERVICE MANUAL

6H2-28197-Z9-11

NOTICE

This manual has been prepared by the Yamaha Motor Company Ltd. primarily for use by Yamaha dealers and their trained mechanics when performing maintenance procedures and repairs to Yamaha equipment. It has been written to suit the needs of persons who have a basic understanding of the mechanical and electrical concepts and procedures inherent in the work, for without such knowledge attempted repairs or service to the equipment could render it unsafe or unfit for use.

Because the Yamaha Motor Company Ltd. has a policy of continuously improving its products, models may differ in detail from the descriptions and illustrations given in this publication. Use only the latest edition of this manual. Authorized Yamaha dealers are notified periodically of modifications and significant changes in specifications and procedures, and these are incorporated in successive editions of this manual.

A10001-0*

50G, 60F, 70B, 75C, 90A
SERVICE MANUAL
©1999 Yamaha Motor Co., Ltd.
1st Edition, February 1999
No part of this publication may be reproduced or transmitted in any form or by any means including photocopying and recording without the written permission of the copyright holder. Such written permission must also be obtained before any part of this publication is stored in a retrieval system of any nature.

A50000-0

HOW TO USE THIS MANUAL

MANUAL FORMAT

This manual provides the mechanic with descriptions of the operations of disassembly, repair, assembly, adjustment and inspection, each of which is presented in a sequential, step-by-step procedure.

To assist you to find your way about this manual, the Section Title and Major Heading is given at the head of every page.

An Index to contents is provided on the first page of each section.

MODEL INDICATION

Multiple models are shown in this manual. These indications are noted as follows.

Model name	50GETO	60FEHTO	60FED	60FEDO	60FET	60FETO	70BEDO	70BETO
USA and Canada name	—	P60TH	C60ER	—	C60TR	—	—	70TR
Indication	50GETO	60FEHTO	60FED	60FEDO	60FET	60FETO	70BEDO	70BETO
Model name	75CET	75CETO	75CEHTO	80AETO	90AEHD	90AED	90AET	90AETO
USA and Canada name	C75TR	75TR	P75TH	—	—	—	C90TR	90TR B90TR
Indication	75CET	75CETO	75CEHTO	80AETO	90AEHD	90AED	90AET	90AETO

THE ILLUSTRATIONS

Some illustrations in this manual may differ from the model you have. This is because the procedure described may relate to several models, though only one may be illustrated. (The name of the model described will be mentioned in the description.)

To help you identify components and understand the correct procedures of disassembly and assembly, exploded diagrams are provided. Steps in the procedures are numbered thus: 1), 2), 3). Parts shown in the illustrations are identified thus: ①, ②, ③.

REFERENCES

These have been kept to a minimum, however, when you are referred to another section of the manual, you are told the page number to go to.

SPECIFICATIONS

These are given in bold type at each procedure. It is not necessary to leave the section dealing with the procedure in order to look up the specifications.
It is important to note the differences in specifications of models. Where a procedure relates to more than one model, the main differences in specifications will be shown in the following table.

Model name	50GETO	60FEHTO	60FED	60FEDO	60FET	60FETO	70BEDO	70BETO
USA and Canada name	—	P60TH	C60ER	—	C60TR	—	—	70TR
Control system	Remote control	Manual control	Remote control					
Tilt system	Power trim and tilt		Manual tilt		Power trim and tilt		Manual tilt	Power trim and tilt
Lubrication system	Oil injection		Pre-mixed	Oil injection	Pre-mixed	Oil injection		

Model name	75CET	75CETO	75CEHTO	80AETO	90AEHD	90AED	90AET	90AETO
USA and Canada name	C75TR	75TR	P75H	—	—	—	C90TR	90TR B90TR
Control system	Remote control		Manual control	Remote control	Manual control	Remote control		
Tilt system	Power trim and tilt				Manual tilt		Power trim and tilt	
Lubrication system	Pre-mixed	Oil injection			Pre-mixed			Oil injection

WARNINGS, CAUTIONS AND NOTES

Attention is drawn to the various Warnings, Cautions and Notes which distinguish important information in this manual in the following ways.

⚠ The Safety Alert Symbol means ATTENTION! BECOME ALERT! YOUR SAFETY IS INVOLVED!

⚠ WARNING

Failure to follow WARNING instructions could result in severe injury or death to the machine operator, a bystander, or a person inspecting or repairing the outboard motor.

CAUTION:

A CAUTION indicates special precautions that must be taken to avoid damage to the outboard motor.

NOTE:

A NOTE provides key information to make procedures easier or clearer.

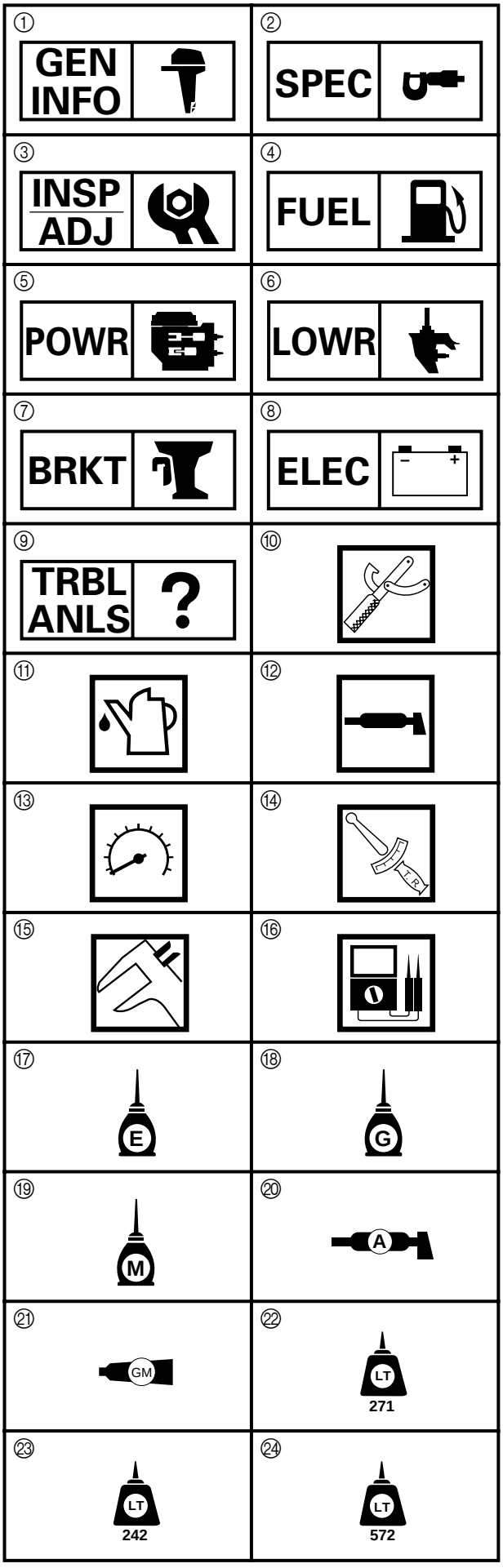

A50001-1-4

SYMBOLS

Symbols ① to ⑨ are designed as thumb-tabs to indicate the content of a chapter.

① General Information
② Specifications
③ Periodic Inspection and Adjustment
④ Fuel System
⑤ Power Unit
⑥ Lower Unit
⑦ Bracket Unit
⑧ Electrical Systems
⑨ Trouble Analysis

Symbols ⑩ to ⑯ indicates specific data:

⑩ Special service tool
⑪ Specified liquid
⑫ Specified grease
⑬ Specified engine speed
⑭ Specified torque
⑮ Specified measurement
⑯ Specified electrical value
[Resistance (Ω), Voltage (V),
Electric current (A)]

Symbol ⑰ to ⑳ in an exploded diagram indicate grade of lubricant and location of lubrication point:

⑰ Apply engine oil
⑱ Apply gear oil
⑲ Apply molybdenum disulfide oil
⑳ Apply water resistant grease (Yamaha marine grease A, Yamaha marine grease)

Symbols ㉑ to ㉔ in an exploded diagram indicate grade of sealing or locking agent, and location of application point:

㉑ Apply Gasket Maker®
㉒ Apply LOCTITE® No. 271 (Red LOCTITE)
㉓ Apply LOCTITE® No. 242 (Blue LOCTITE)
㉔ Apply LOCTITE® No. 572

NOTE:

In this manual, the above symbols may not be used in every case.

A30000-0

INDEX

GENERAL INFORMATION	GEN INFO	1
SPECIFICATIONS	SPEC	2
PERIODIC INSPECTION AND ADJUSTMENT	INSP ADJ	3
FUEL SYSTEM	FUEL	4
POWER UNIT	POWR	5
LOWER UNIT	LOWR	6
BRACKET UNIT	BRKT	7
ELECTRICAL SYSTEMS	ELEC	8
TROUBLE ANALYSIS	TRBL ANLS	9

CHAPTER 1
GENERAL INFORMATION

IDENTIFICATION 1-1
SERIAL NUMBER 1-1
STARTING SERIAL NUMBERS 1-1

SAFETY WHILE WORKING 1-2
FIRE PREVENTION 1-2
VENTILATION 1-2
SELF-PROTECTION 1-2
OILS, GREASES AND SEALING FLUIDS 1-2
GOOD WORKING PRACTICES 1-3
DISASSEMBLY AND ASSEMBLY 1-4

SPECIAL TOOLS 1-5
MEASURING 1-6
REMOVAL AND INSTALLATION 1-8

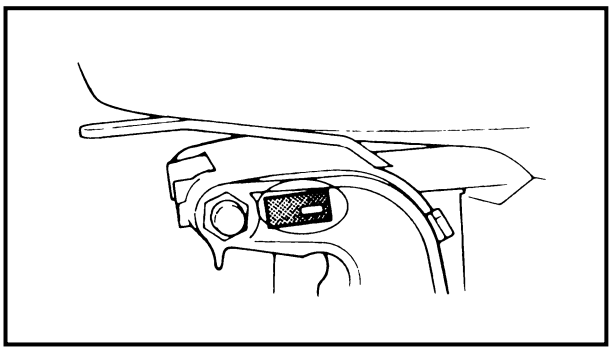

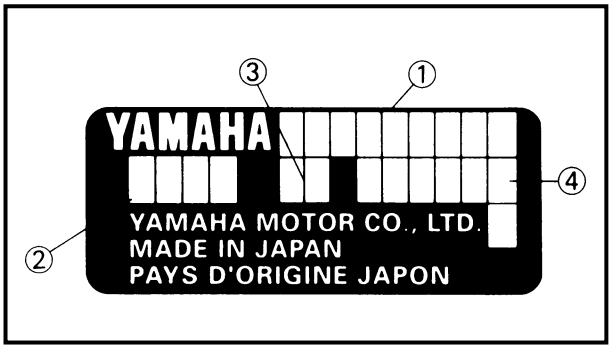

A60000-1*

IDENTIFICATION

SERIAL NUMBER

The serial number of the outboard motor is stamped on a plate attached to the port side of the clamp bracket.

① Serial number

NOTE:

For USA model:

As an anti-theft measure, a special label on which the outboard motor serial number is stamped is bonded to the port side of the clamp bracket. The label is specially treated so that peeling it off causes cracks across the serial number.

① Model name
② Approved model No.
③ Transom height
④ Serial number

STARTING SERIAL NUMBERS

The starting serial number blocks are as follows:

Model			Approved model No.	Serial number	Model			Approved model No.	Serial number
World-wide	USA	Canada			World-wide	USA	Canada		
50GETO	—	—	62F	L: 400805 ~	70BEDO	—	—	6H3	L: 402029 ~
60FEHTO	P60TH	P60TH	6H2	L: 551924 ~	70BETO	70TR	70TR		L: 491824 ~
				X: 750186 ~					X: 731262 ~
60FED	—	C60ER		S: 001118 ~	75CET	C75TR	C75TR	6H0	L: 001251 ~
				L: 305624 ~	75CETO	—	75TR		L: 951540 ~
60FEDO	—	—		S: 100850 ~	75CEHTO	P75TH	—		L: 900371 ~
				L: 407212 ~	80AETO	—	—		L: 457543 ~
60FET	C60TR	C60TR		S: 050474 ~					X: 851331 ~
				L: 357665 ~	90AEHD	—	—	6H1	L: 320132 ~
				X: 710231 ~	90AED	—	—		L: 401108 ~
60FETO	—	—		S: 150756 ~	90AET	C90TR	C90TR		L: 354053 ~
				L: 472180 ~	90AETO	90TR B90TR	90TR		L: 498690 ~
				X: 732000 ~					X: 856313 ~

SAFETY WHILE WORKING

The procedures given in this manual are those recommended by Yamaha to be followed by Yamaha dealers and their mechanics.

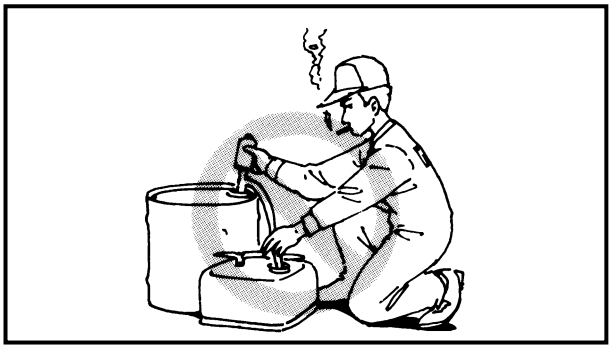

FIRE PREVENTION

Gasoline (petrol) is highly flammable.
Petroleum vapor is explosive if ignited.
Do not smoke while handling and keep it away from heat, sparks, and open flames.

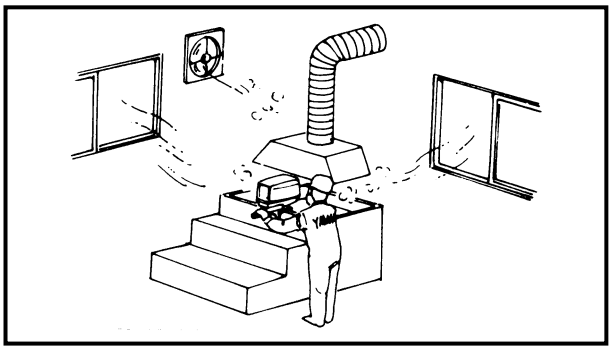

VENTILATION

Petroleum vapor is heavier than air and if inhaled in large quantities will not support life. Engine exhaust gases are harmful to breathe. When test-running an engine indoors, maintain good ventilation.

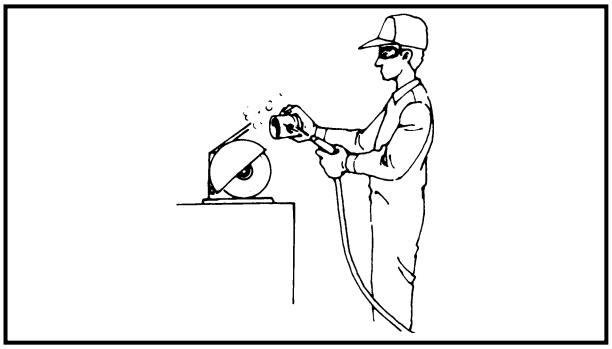

SELF-PROTECTION

Protect your eyes with suitable safety glasses or safety goggles when using compressed air, when grinding or when doing any operation which may cause particles to fly off.
Protect hands and feet by wearing safety gloves or protective shoes if appropriate to the work you are doing.

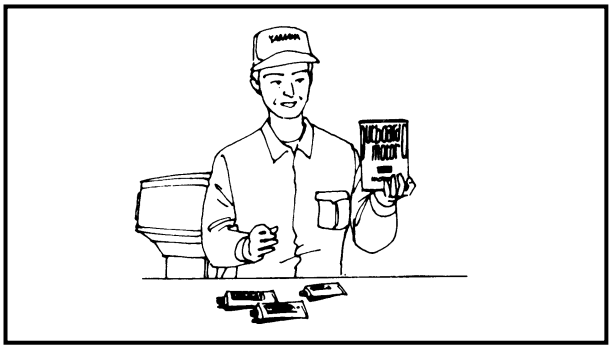

OILS, GREASES AND SEALING FLUIDS

Use only genuine Yamaha oils, grease and sealing fluids or those recommended by Yamaha.

Under normal conditions of use, there should be no hazards from the use of the lubricants mentioned in this manual. However, safety is all-important and by adopting good safety practices, any risk is minimized.
A summary of the most important precautions is as follows:

1. While working, maintain good standards of personal and industrial hygiene.
2. Clothing which has become contaminated with lubricants should be changed as soon as practicable, and laundered before further use.
3. Avoid skin contact with lubricants; do not, for example, place a soiled wiping-rag in one's pocket.
4. Hands, and any other part of the body which have been in contact with lubricants or lubricant-contaminated clothing, should be thoroughly washed with hot water and soap as soon as practicable.
5. To protect the skin, the application of a suitable barrier cream to the hands before working is recommended.
6. A supply of clean, lint-free cloths should be available for wiping purposes.

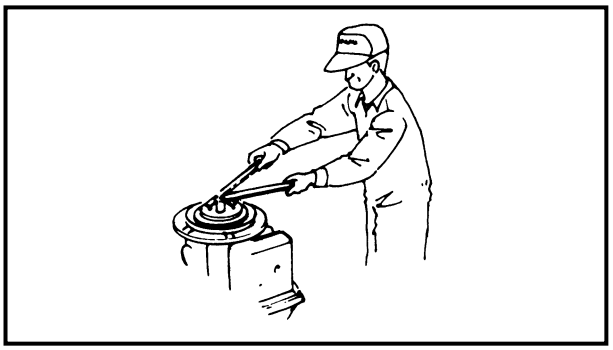

GOOD WORKING PRACTICES

1. **The right tools**
   Use the special tools that are advised to protect parts from damage. Use the right tool in the right manner - don't improvise.
2. **Tightening torque**
   Follow the torque tightening instructions. When tightening bolts, nuts and screws, tighten the larger sizes first, and tighten inner-positioned fixings before outer-positioned ones.

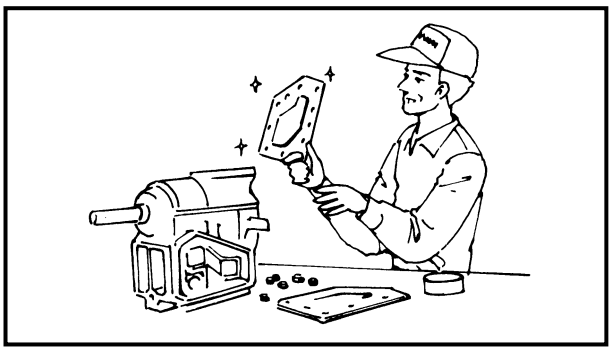

3. **Non-reusable items**
   When reassembling, always use new gaskets, packing, O-rings, oil seals, split-pins and circlips, etc.

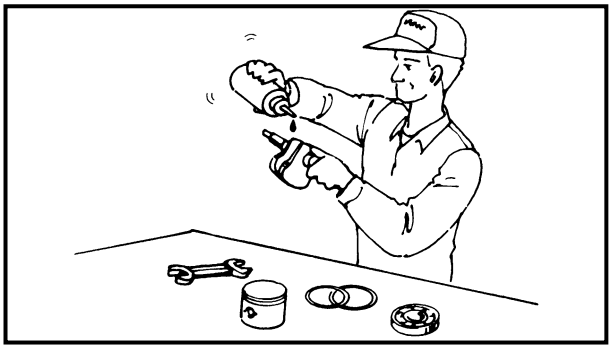

DISASSEMBLY AND ASSEMBLY

1. Clean parts with compressed-air when disassembling them.
2. Oil the contact surfaces of moving parts before assembly.

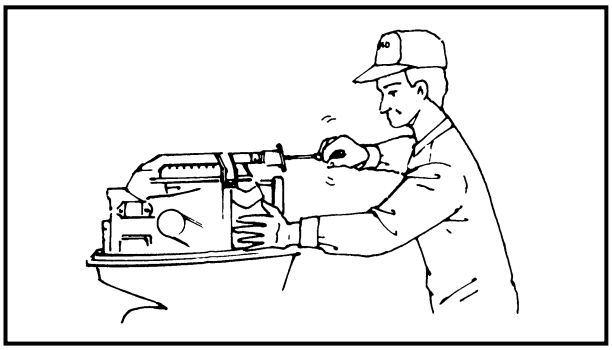

3. After assembly, check that moving parts operate normally.

4. Install bearings with the manufacturer's markings on the side exposed to view and liberally oil the bearings.
5. When installing oil seals, apply a light coating of water-resistant grease to the outside circumference.

A80000-0*

SPECIAL TOOLS

The use of correct special tools recommended by Yamaha will aid the work and enable accurate assembly and tune-up. Improvisations and use of improper tools can cause damage to the equipment.

NOTE:

- For USA and Canada, use part numbers starting with "YB-", "YM-", "YU-" or "YW-".
- For others, use part numbers starting with "90890-".

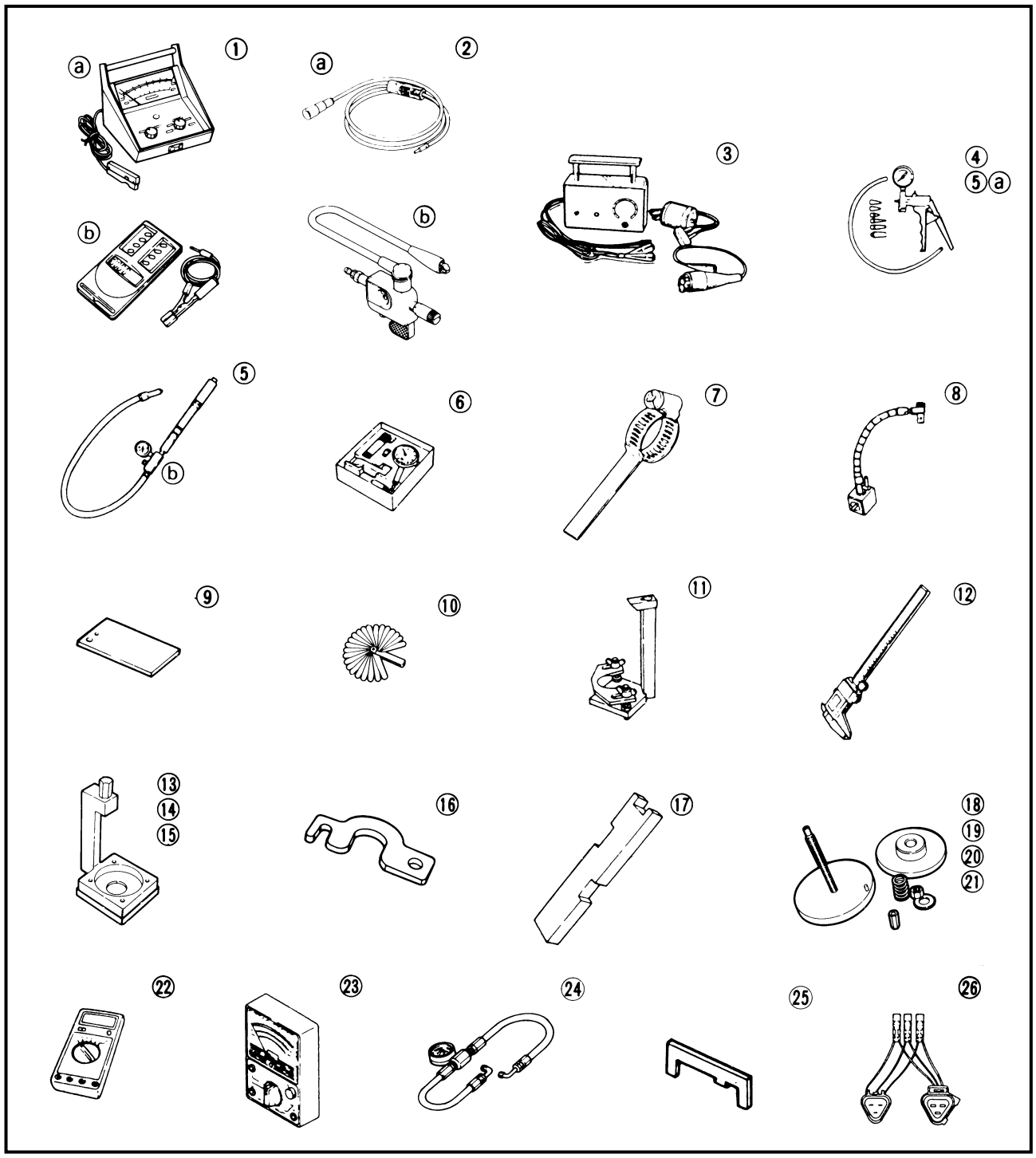

MEASURING

	Tool name	Tool No.		Use for:	
		USA and Canada ⓐ	Except for USA and Canada ⓑ		
1	Tachometer	YU-08036-A	90890-06760	Idle speed	
2	Dynamic spark tester	YM-34487	90890-06754	Ignition system	
3	CDI tester	YU-91022-B	N.A.	Ignition system	
4	Mity Vac	YB-35956	90890-06756	Fuel joint	
5	Pressure tester	YB-35956	90890-06762	Lower case	
6	Dial gauge	YU-03097	90890-01252	Backlash	
7	Backlash indicator	YB-06265	90890-06706	Backlash	
8	Magnet base	YU-34481	90890-06705	Backlash	
9	Backlash adjusting plate	YB-07003	N.A.	Backlash	
10	Thickness gauge	YU-26900-8	N.A.	Shimming	
11	Pinion height gauge	N.A.	90890-06702	Pinion shimming	
12	Digital caliper	N.A.	90890-06704	Pinion shimming	Forward shimming
13	Gauge block	YB-34432-9	N.A.	Pinion shimming	
14	Adapter plate	YB-34432-10	N.A.	Pinion shimming	
15	Gauge base	YB-34432-11	N.A.	Pinion shimming	
16	Clamp	YB-34432-17	N.A.	Pinion shimming	
17	Shimming plate	N.A.	90890-06701	Forward shimming	
18	Base plate	YB-34446-1	N.A.	Forward shimming	
19	Compression spring	YB-34446-3	N.A.	Forward shimming	
20	Press plate	YB-34446-5	N.A.	Forward shimming	
21	Gauge pin	YB-34446-7	N.A.	Forward shimming	
22	Digital multimeter	YU-34899-A	90890-06752	Electrical	
23	Pocket tester	YU-03112	90890-03112	Electrical	
24	Pressure gauge	YB-06181	N.A.	PTT unit	
25	Shimming gauge	YB-34468-3 YB-34468-5	N.A.	Reverse shimming	
26	3 pins test harness	YB-06443	90890-06757	Peak voltage measurement	

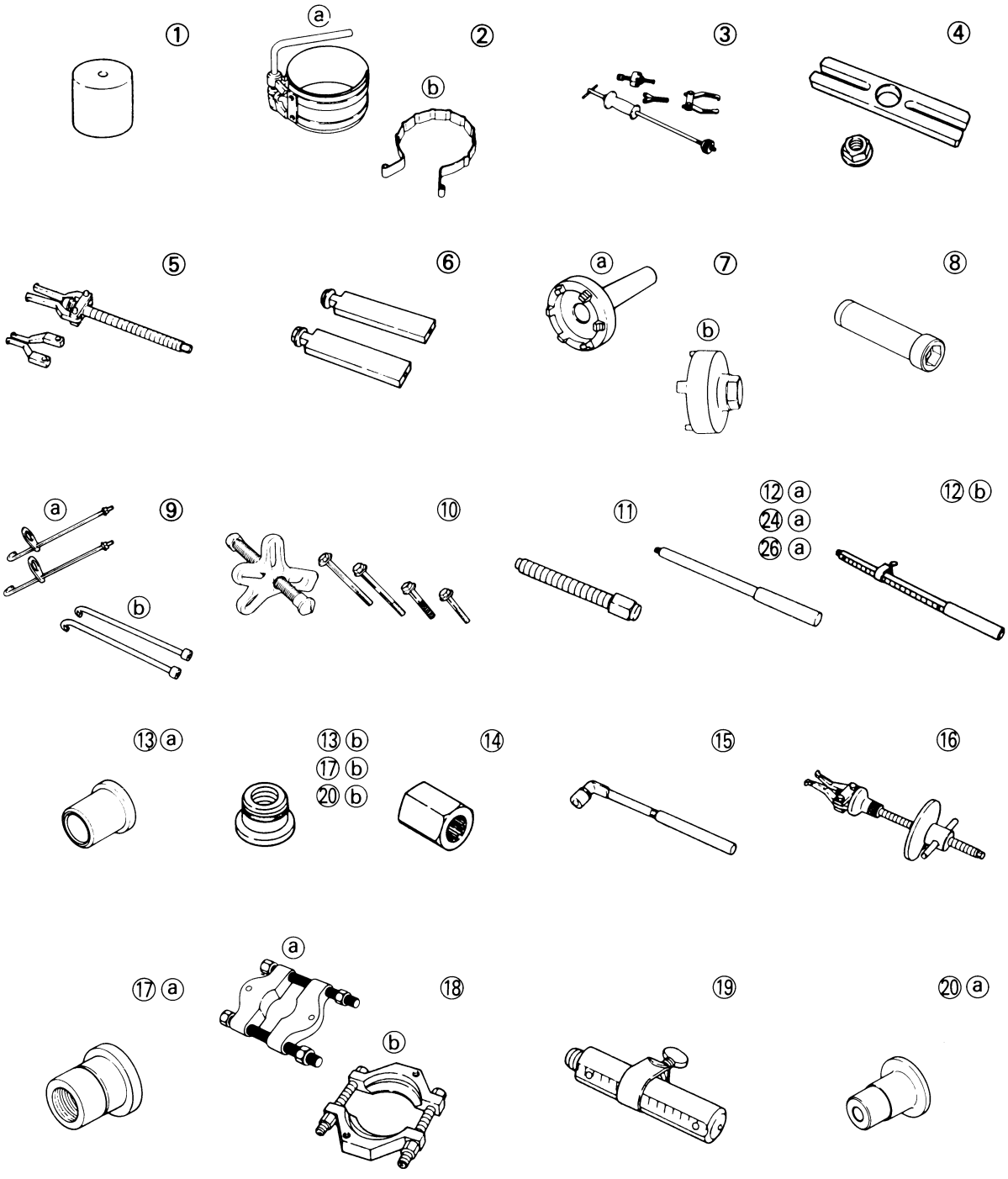
①
②
ⓐ
ⓑ
③
④
⑤
⑥
⑦
ⓐ
ⓑ
⑧
⑨
ⓐ
ⓑ
⑩
⑪
⑫ ⓐ
㉔ ⓐ
㉖ ⓐ
⑫ ⓑ
⑬ ⓐ
⑬ ⓑ
⑰ ⓑ
⑳ ⓑ
⑭
⑮
⑯
⑰ ⓐ
ⓐ
⑱
ⓑ
⑲
⑳ ⓐ

REMOVAL AND INSTALLATION

	Tool name	Tool No.		Use for:
		USA and Canada ⓐ	Except for USA and Canada ⓑ	
1	Small end bearing installer	YB-06107 YB-06287	90890-06527	Connecting rod
2	Piston slider	YU-33294	90890-06530	Cylinder piston
3	Slide hammer set	YB-06096	N.A.	Water pump housing oil seal Reverse gear bearing Propeller shaft housing oil seal Drive shaft outer bearing Forward gear outer bearing
4	Stopper guide plate	N.A.	90890-06501	Water pump housing oil seal Bearing housing Reverse gear bearing Propeller shaft housing oil seal Drive shaft outer bearing
5	Bearing puller	N.A.	90890-06535	Water pump housing oil seal Reverse gear bearing Propeller shaft housing oil seal Drive shaft outer bearing
6	Stopper guide stand	N.A.	90890-06538	Water pump housing oil seal Reverse gear bearing Propeller shaft housing oil seal Drive shaft outer bearing
7	Ring nut wrench	YB-06048 YB-34447	90890-06510 90890-06511	Ring nut
8	Extension	N.A.	90890-06513	Ring nut
9	Claw	YB-06207	90890-06502 90890-06503	Propeller shaft housing
10	Universal puller	YB-06117	N.A.	Propeller shaft housing
11	Center bolt	N.A.	90890-06504	Propeller shaft housing
12	Drive rod	YB-06071	90890-06602	Propeller shaft housing oil seal Drive shaft needle bearing
13	Needle bearing attachment	YB-06153	90890-06612	Propeller shaft housing bearing
14	Drive shaft holder	YB-06049 YB-06151	90890-06518 90890-06519	Pinion nut
15	Pinion nut holder	N.A.	90890-06505	Pinion nut
16	Bearing outer race puller	N.A.	90890-06523	Forward gear outer bearing
17	Needle bearing attachment	YB-06155	90890-06611	Drive shaft needle bearing
18	Bearing separator	YB-06219	90890-06534	Crank shaft bearing Reverse gear bearing Forward gear bearing
19	Drive rod	YB-06071	90890-06604	Propeller shaft needle bearing
20	Needle bearing attachment	YB-06153	90890-06612 90890-06614	Propeller shaft needle bearing

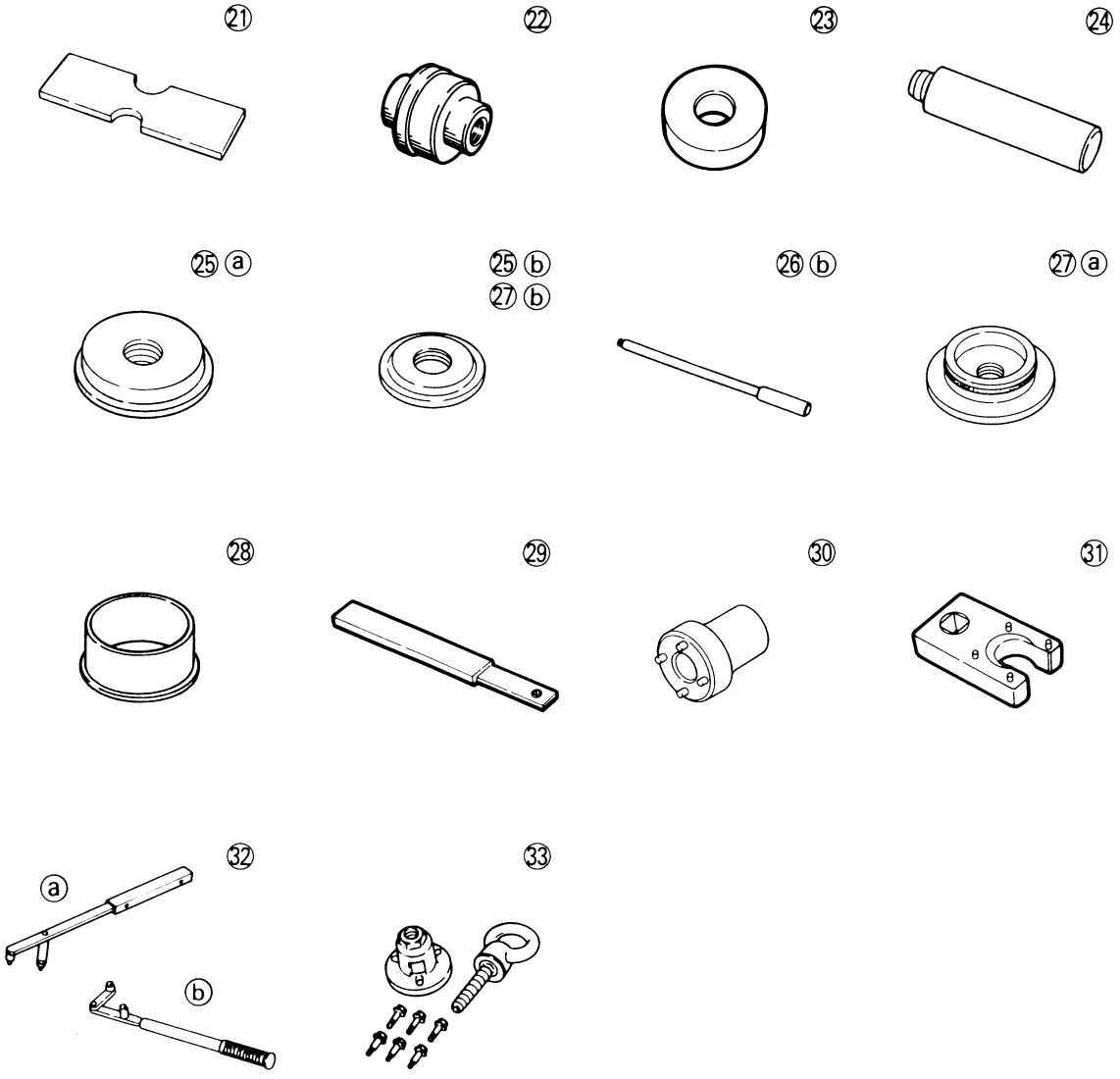
㉑
㉒
㉓
㉔
㉕ ⓐ
㉕ ⓑ
㉗ ⓑ
㉖ ⓑ
㉗ ⓐ
㉘
㉙
㉚
㉛
θ
θ
θ
θ
㉜
ⓐ
ⓑ
㉝

	Tool name	Tool No.		Use for:
		USA and Canada ⓐ	Except for USA and Canada ⓑ	
21	Bearing depth plate	N.A.	90890-06603	Propeller shaft needle bearing Drive shaft needle bearing
22	Oil seal attachment	YB-06269	N.A.	Propeller shaft oil seal
23	Needle bearing depth stop	YB-34473	N.A.	Drive shaft needle bearing
24	Driver rod	YB-06071	90890-06606	Drive shaft outer bearing
25	Bearing outer race attachment	YB-06156	90890-06626 90890-06627	Drive shaft outer bearing
26	Driver rod	YB-06071	90890-06605	Forward gear outer bearing
27	Bearing outer race attachment	YB-06276-B	90890-06621 90890-06622	Forward gear outer bearing
28	Bearing inner race attachment	N.A.	90890-06640 90890-06662	Forward gear inner bearing
29	Shift rod wrench	YB-06052	N.A.	Shift rod
30	Cylinder end screw wrench	YB-06175-1A	N.A.	PTT
31	Cylinder end screw wrench	YB-06175-2B	90890-06544 90890-06548	PTT
32	Flywheel holder	YB-06139	90890-06522	Flywheel
33	Flywheel puller	YB-06117	90890-06521	Flywheel

CHAPTER 2
SPECIFICATIONS

GENERAL SPECIFICATION 2-1

MAINTENANCE SPECIFICATIONS 2-5
ENGINE 2-5
ELECTRICAL 2-7
DIMENSION 2-10

TIGHTENING TORQUE 2-12

GENERAL TORQUE SPECIFICATIONS 2-13

C20000-0*

GENERAL SPECIFICATION

		Unit	Model		
			50 hp	60 hp	70 hp
Model			50GETO	*1: P60TH/ 60FEHTO *2: C60ER/60FED *3: 60FEDO *4: C60TR/60FET *5: 60FETO	*3: 70BEDO *5: 70TR/70BETO
Approved model No.			62F	6H2	6H3
Overall Length		mm (in)	698 (27.5)	713 (28.1)	
			—	1,330 (52.4)*1	—
Overall width		mm (in)	364 (14.3)		
Overall height	S	mm (in)	—	1,252 (49.3)*2,3,4	—
	L	mm (in)	1,351 (53.2)	1,374 (54.1)	
	X	mm (in)	—	1,501 (59.1)*1,4,5	
Boat transom height	S	mm (in)	—	381 (15.0)*2,3,4,5	—
	L	mm (in)	508 (20.0)		
	X	mm (in)	—	635 (25.0)*1,4,5	
O/M transom height	S	mm (in)	—	400 (15.7)*2,3,4,5	—
	L	mm (in)	520 (20.5)	521 (20.5)	
	X	mm (in)	—	648 (25.5)*1,4,5	
Weight (Al.)	S	kg (lb)	—	94 (207)*2 95.5 (211)*3 104 (229)*4 103.5 (228)*5	—
	L	kg (lb)	102 (225)	97.5 (215)*3 105.5 (233)*5	
				112 (247)*1 96 (212)*2 106 (234)*4	—
	X	kg (lb)	—	115 (254)*1 109 (240)*4	108.5 (239)*5
Weight (SUS.)	S	kg (lb)	—	97.5 (215)*3	—
			—	105.5 (233)*5	—
	L	kg (lb)	—	99.5 (219)*3	
			—	107.5 (237)*5	
	X	kg (lb)	—	110.5 (244)*5	
Full throttle speed range		r/min	4,500 ~ 5,500		5,000 ~ 6,000
Output (ISO)		kW (hp) @ r/min	36.8 (50) @ 5,000	44.1 (60) @ 5,000	51.5 (70) @ 5,500
Maximum fuel consumption		L (US gal, lmp gal)/h @ r/min	22 (5.81, 4.84) @ 5,500	23 (6.08, 5.06) @ 5,500	26 (6.87, 5.72) @ 5,500
Type			2 stroke - L		
Cylinders			3		
Total displacement		cm^3 (cu in)	849 (51.8)		
Bore × Stroke		mm (in)	72.0 × 69.5 (2.83 × 2.74)		
Compression ratio			6.33	6.10	
Compression pressure		kPa (kg/cm^2)	853 (8.53)		
Carburetor number			3		
Intake system			Reed valve		

		Unit	Model		
			75hp	80hp	90hp
Model			C75TR/75CET[*1] 75TR/75CETO[*2] P75TH/75CEHTO[*3]	80AETO	90AEHD[*1] 90AED[*2] C90TR/90AET[*3] 90TR/90AETO[*4] B90TR/90AETO[*4]
Approved model No.			6H0		6H1
Overall Length		mm (in)	726 (28.6)[*1,2]	726 (28.6)	726 (28.6)[*2,3,4]
			1,343 (52.9)[*3]	—	1,343 (52.9)[*1]
Overall Width		mm (in)	374 (14.7)[*1,2]	374 (14.7)	374 (14.7)[*2,3,4]
			398 (15.7)[*3]	—	398 (15.7)[*1]
Overall Height	S	mm (in)	—		
	L	mm (in)	1,413 (55.6)		
	X	mm (in)	—	1,540 (60.6)	1,540 (60.6)[*4]
Boat transom height	S	mm (in)	—		
	L	mm (in)	508 (20.0)		
	X	mm (in)	—	635 (25.0)	635 (25.0)[*4]
O/M transom height	S	mm (in)	—		
	L	mm (in)	520 (20.5)		
	X	mm (in)	—	647 (25.5)	647 (25.5)[*4]
Weight (Al.)	S	kg (lb)	—		
	L	kg (lb)	119.5 (263)[*1] 120.5 (266)[*2] 124.5 (275)[*3]	120.5 (266)	115.5 (255)[*1] 111.5 (246)[*2] 119.5 (263)[*3] 120.5 (266)[*4]
	X	kg (lb)	—	123.5 (272)	123.5 (272)[*4]
Weight (SUS.)	S	kg (lb)	—		
	L	kg (lb)	121.5 (268)[*1] 122.5 (270)[*2]	122.5 (270)	113.5 (250)[*2] 121.5 (268)[*3] 122.5 (270)[*4]
	X	kg (lb)	—	125.5 (277)	125.5 (277)[*4]
Full throttle speed range		r/min	4,500 ~ 5,500		
Output (ISO)		kW (hp) @ r/min	55.2 (75) @ 5,000	58.8 (80) @ 5,000	66.2 (90) @ 5,000
Maximum fuel consumption		L (US gal, Imp gal)/h @ r/min	32 (8.45, 7.04) @ 5,500		34.5 (9.11, 7.59) @ 5,500
Type			2 stroke-L		
Cylinders			3		
Total Displacement		cm^3 (cu in)	1,141 (69.6)		
Bore × Stroke		mm (in)	82.0 × 72.0 (3.23 × 2.83)		
Compression ratio			5.90		5.86
Compression pressure		kPa (kg/cm^2)	922 (9.22)		
Carburetor number			3		
Intake system			Reed valve		

	Unit	Model					
		50 hp	60 hp	70 hp	75 hp	80 hp	90 hp
Scavenging system		Loop charge					
Starting system		Electric					
Ignition system		CDI					
Alternator output		6A			10A		
Carburetor starting system		Choke valve*1/Prime start					
Advance type		Micro computer					
Spark plug (NGK)		BR8HS-10	B8HS-10				
Spark plug with noise suppressor (NGK)		BR8HS-10/Register plug-cap (standard)					
Exhaust system		Through prop boss					
Cooling system		Water					
Lubrication system		Pre-mixed gasoline & oil*2/Oil injection					
Fuel type	P.O.N.*3	Regular gasoline					
Fuel rating		Min.86					
Engine oil type/grease		TC-W3*4					
Gear oil type		Hypoid gear oil-SAE#90*5					
Gear oil quantity	cm^3 (US oz, Imp oz)	500 (16.91, 17.60)	610 (20.62, 21.47)				
Engine oil tank capacity	L (US qt, Imp qt)	2.8 (2.96, 2.46)			3.3 (3.49, 2.90)		
Tilt angle (Manual tilt model)	degree	8/12/16/20/24					
Tilt-up angle S	degree	63			—		
L, X		67					
Trim angle (PTT model)	at 12 transom	–4 ~ 15			–4 ~ 16		
Steering angle	degree (left + right)	35 + 35			30 + 30		
Gear shift position		F-N-R*6					
Gear ratio		14:24 (1.714)	12:28 (2.333)		13:26 (2.000)		
Gear type		Spiral bevel gear					
Clutch type		Dog clutch					
Propeller direction		Clockwise					
Propeller drive system		Spline					
Propeller series mark		K					
Battery capacity	Ah (kC)	70 (252)					
Cold cranking	Amps	380					

*1: For C60ER, C60TR, C75TR
*2: For C60ER/60FED, C60TR/60FET, C75TR, 90AEHD, 90AED, C90TR/90AET
*3: Pump Octane Number; (Research octane + Motor octane)/2
*4: YAMALUBE two-cycle outboard motor oil is recommended in USA
YAMALUBE 1 is recommended in Canada
*5: GEAR CASE LUBE is recommended in USA
*6: Forward-Neutral-Reverse

Item	Unit	Model
		50 hp
Propeller		G type (aluminum)
No. of blades × diameter × pitch	in	3 × 11-3/8 × 12 3 × 11-1/8 × 13

Item	Unit	Model	
		60, 70 hp	
Propeller		K type (aluminum)	K type (stainless)
No. of blades × diameter × pitch	in	3 × 13-1/4 × 17	3 × 13 × 17
		3 × 13 × 23	3 × 13 × 19
		3 × 12-5/8 × 21	3 × 13 × 21
		3 × 13 × 19	3 × 13 × 23
		3 × 13-1/2 × 15	3 × 13 × 25
		3 × 13-5/8 × 13	3 × 13-1/2 × 14
			3 × 13-1/2 × 16
P: High performance propeller		P type (stainless)	
	in	3 × 14 × 20	
		3 × 14 × 24	
		3 × 14 × 28	

Item	Unit	Model	
		75, 80, 90 hp	
Propeller		K type (aluminum)	K type (stainless)
No. of blades × diameter × pitch	in	3 × 12-5/8 × 21	3 × 13 × 17
		3 × 13 × 19	3 × 13 × 19
		3 × 13 × 23	3 × 13 × 21
		3 × 13-1/4 × 17	3 × 13 × 23
		3 × 13-1/2 × 15	3 × 13 × 25
		3 × 13-1/2 × 17	3 × 13-1/2 × 14
		3 × 13-5/8 × 13	3 × 13-1/2 × 16
		3 × 14 × 11	
P: High performance propeller		P type (stainless)	
	in	3 × 14 × 20	
		3 × 14 × 22	
		3 × 14 × 24	
		3 × 14 × 26	
		3 × 14 × 28	

C31000-0*

MAINTENANCE SPECIFICATIONS

ENGINE

Item	Unit	Model					
		50 hp	60 hp	70 hp	75 hp	80 hp	90 hp
Cylinder head:							
Warpage limit	mm (in)	0.1 (0.004)					
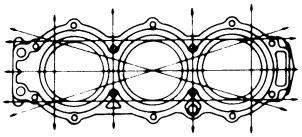							
(Lines indicate straight measurement)							
Cylinder:							
Bore size	mm (in)	72.00 ~ 72.02 (2.834 ~ 2.835)			82.00 ~ 82.02 (3.228 ~ 3.229)		
Taper limit	mm (in)	0.08 (0.003)					
Out of round limit	mm (in)	0.05 (0.002)					
Piston:							
Piston to cylinder clearance	mm (in)	0.050 ~ 0.055 (0.0020 ~ 0.0022)			0.060 ~ 0.065 (0.0024 ~ 0.0026)		
<Limit>	mm (in)	0.105 (0.0041)			0.115 (0.0045)		
Piston size "D"	mm (in)	71.945 ~ 71.970 (2.8325 ~ 2.8335)			81.935 ~ 81.960 (3.2258 ~ 3.2268)		
Measuring point "H"	mm (in)	10 (0.4)					
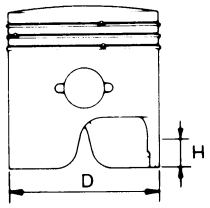							
Oversize 1st	mm (in)	72.25 (2.844)*			82.25 (3.238)*		
2nd	mm (in)	72.50 (2.854)			82.50 (3.248)		
Offset	mm (in)	0.5 (0.0197)			1.0 (0.039)		
[direction]		[Exhaust side]			[Exhaust side]		
Piston ring:							
Sectional sketch							
Top ring & 2nd ring Type		Keystone					
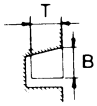 B	mm (in)	2.0 (0.08)					
T	mm (in)	3.0 (0.12)			3.2 (0.13)		
End gap [installed]							
Top ring & 2nd ring	mm (in)	0.3 ~ 0.5 (0.012 ~ 0.020)			0.4 ~ 0.6 (0.016 ~ 0.024)		
Side clearance							
Top ring & 2nd ring	mm (in)	0.03 ~ 0.07 (0.0012 ~ 0.0028)			0.03 ~ 0.06 (0.0012 ~ 0.0024)		

*: Except for USA

Item	Unit	Model					
		50 hp	60 hp	70 hp	75 hp	80 hp	90 hp
Crankshaft:							
Crank width "A"	mm (in)	57.90 ~ 57.95 (2.280 ~ 2.281)			—		
Crank width "B"	mm (in)	151.7 ~ 152.0 (5.972 ~ 5.984)			—		
Crank width "C"	mm (in)	245.5 ~ 246.1 (9.67 ~ 9.69)			284.2 ~ 284.8 (11.19 ~ 11.21)		
Maximum deflection "D"	mm (in)	0.03 (0.0012)			0.05 (0.0020)		
Connecting rod side clearance "E"	mm (in)	0.20 ~ 0.70 (0.008 ~ 0.028)			0.12 ~ 0.26 (0.005 ~ 0.010)		
Connecting rod maximum axial play "F"	mm (in)	2.0 (0.08)					
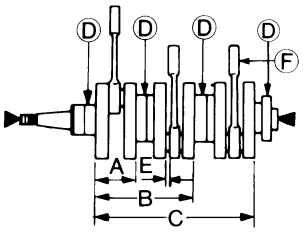							
Carburetor:							
Stamp mark		62F00	6H20A, 6H210*1	6H30A	6H007, 6H015*2	6H007	6H107
Main jet (M.J.)	#	125	140, 145 (L)*3	150	160		
Main air jet (M.A.J.)	#	170	175, 180*1	160	180		175
Pilot jet (P.J.)	#	65	65, 70*1	75	78, 80*2	78	78
Pilot air jet (P.A.J.)	#	70	75, 80*1	70	80, 75*2	80	70
Pilot screw (P.S.)	Turns out	1-3/8 ± 1/4	1-1/2 ± 1/4, 1-3/8 ± 1/4*1	1-1/4 ± 1/4	1-3/8 ± 1/4		1-1/4 ± 1/4
Float height (F.H.)	mm (in)	15.0 ± 1.0 (0.59 ± 0.04)	14.0 ± 1.0 (0.55 ± 0.04) 14.0 ± 2.0 (0.55 ± 0.08)*1 19.5 ± 3.0 (0.77 ± 0.12)*2				
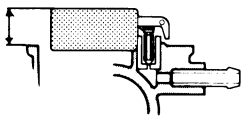							
Valve seat size	ø	1.2 (0.047)	1.6 (0.063), 1.4 (0.055)*1	1.4 (0.055)	1.6 (0.063)		
Idling speed	r/min	800 ± 50					
Oil injection pump:							
Stamped mark		62F00	6H302		6H102		
Discharge	cm^3 (US oz, Imp oz)	1.90 ± 0.50 (0.064 ± 0.017, 0.067 ± 0.018)	2.20 ± 0.50 (0.074 ± 0.017, 0.077 ± 0.018)		3.10 ± 0.70 (0.105 ± 0.024, 0.109 ± 0.025)		
Reed valve:							
Stopper height	mm (in)	3.0 ± 0.2 (0.12 ± 0.01)		9.9 ± 0.2 (0.39 ± 0.01)			
Warpage limit	mm (in)	0.2 (0.01)					

*1: For C60ER, C60TR
*2: For C75TR
*3: Lower cylinder

Item	Unit	Model					
		50 hp	60 hp	70 hp	75 hp	80 hp	90 hp
Thermostat:							
Valve opening temperature	°C (°F)	48 ~ 52 (118 ~ 126)					
Full-opening temperature	°C (°F)	60 (140)					
Valve lift	mm (in)	3 (0.12)					

C32000-0*

ELECTRICAL

Item	Unit	Model					
		50hp	60hp	70hp	75hp	80hp	90hp
Ignition system:							
Ignition timing							
at full reversed	ATDC degree	7 ± 1			8 ± 1		
at full advanced	BTDC degree	22 ± 1		20 ± 1			22 ± 1
cam roller pick-up	ATDC degree	7 ± 1			8 ± 1		
Piston position							
at full advanced	BTDC mm (in)	3.23 ± 0.28 (0.127 ± 0.11)		2.68 ± 0.26 (0.106 ± 0.010)	2.83 ± 0.27 (0.111 ± 0.011)		3.41 ± 0.29 (0.134 ± 0.011)
Charging coil resistance [20°C (68°F)]	Ω	136 ~ 204 (Brown – Blue)			64 ~ 96 (Br – R) 191 ~ 288 (B – R)		
Charge coil output peak voltage (minimum)							
color		Br – L			R – Br		R – L
@ cranking (open)	V	120			55		90
@ cranking (connect)	V	150			60		100
@ 1,500 r/min	V	160			170		135
@ 3,500 r/min	V	120			150		135
Pulser coil resistance [20°C (68°F)]	Ω	240 ~ 360 (W/R – W/B)			241 ~ 362 (W/R – W/B)		
Pulser coil output peak voltage (minimum)							
color		W/R – W/B			W/R – W/B		
@ cranking (open)	V	4.5			7.0		
@ cranking (connect)	V	2.5			5.0		
@ 1,500 r/min	V	6.5			14		
@ 3,500 r/min	V	10			20		

Item	Unit	Model					
		50hp	60hp	70hp	75hp	80hp	90hp
Ignition coil:							
Primary coil resistance [20°C (68°F)]	Ω	0.18 ~ 0.24 (Black/White – Black)					
Secondary coil resistance [20°C (68°F)]	kΩ	3.26 ~ 4.88 (Black/White – High tension cord)					
Crank position sensor resistance [20°C (68°F)]	Ω	158 ~ 236 (Blue/White – Blue/Red)					
Crank position sensor peak voltage: (minimum)							
color		L/R – L/W			L/R – L/W		
@ cranking (open)	V	5.0			5.5		
@ cranking (connect)	V	5.0			5.5		
@ 1,500 r/min	V	20			25		
@ 3,500 r/min	V	16			20		
Spark plug:							
Spark plug gap	mm (in)	0.9 ~ 1.0 (0.035 ~ 0.039)					
CDI unit output peak voltage: (minimum)							
color		B/W – B			B/W – B		
@ cranking (open)	V	—			—		
@ cranking (connect)	V	#1, 3: 105 #2: —			#1,3: 130 #2: —		
@ 1,500 r/min	V	145			155		
@ 3,500 r/min	V	105			130		
Lighting system:							
Lighting coil resistance STD (12V 80W) [20°C (68°F)]	Ω	0.57 ~ 0.85 (G/W – G)			0.4 ~ 0.6 (G/W – G)		
Lighting coil output peak voltage (minimum)							
color		G – G/W			G – G/W		
@ cranking (open)	V	8.5			10		
@ cranking (connect)	V	8.0			11		
@ 1,500 r/min	V	25			25		
@ 3,500 r/min	V	25			25		
Starter motor:							
Rating	Sec	30					
Output	kW	0.6			1.0		
Clutch type		Overrunning					
Brush length	mm (in)	12.5 (0.49)			16.0 (0.63)		
<Wear limit>	mm (in)	9.0 (0.35)			12.0 (0.47)		
Commutator undercut	mm (in)	0.8 (0.03)					
<Repair limit>	mm (in)	0.2 (0.01)					

Item	Unit	Model					
		50hp	60hp	70hp	75hp	80hp	90hp
Commutator outside diameter	mm (in)	30 (1.18)			33 (1.30)		
<Repair limit>	mm (in)	29 (1.14)			31 (1.22)		
Pinion/ring gear gap	mm (in)	3.0 ~ 5.0 (0.12 ~ 0.20)					
Others:							
Electrothermal valve resistance [20°C (68°F)]	Ω	2.3 ~ 3.5 (L – B)					
Fuel enrichment valve resistance [20°C (68°F)]	Ω	3.4 ~ 4.0 (L – B)					
Trim sensor resistance	Ω	360 ~ 540 (P – B) 800 ~ 1,200 (B – O)					
Fuse	A	20					

DIMENSION

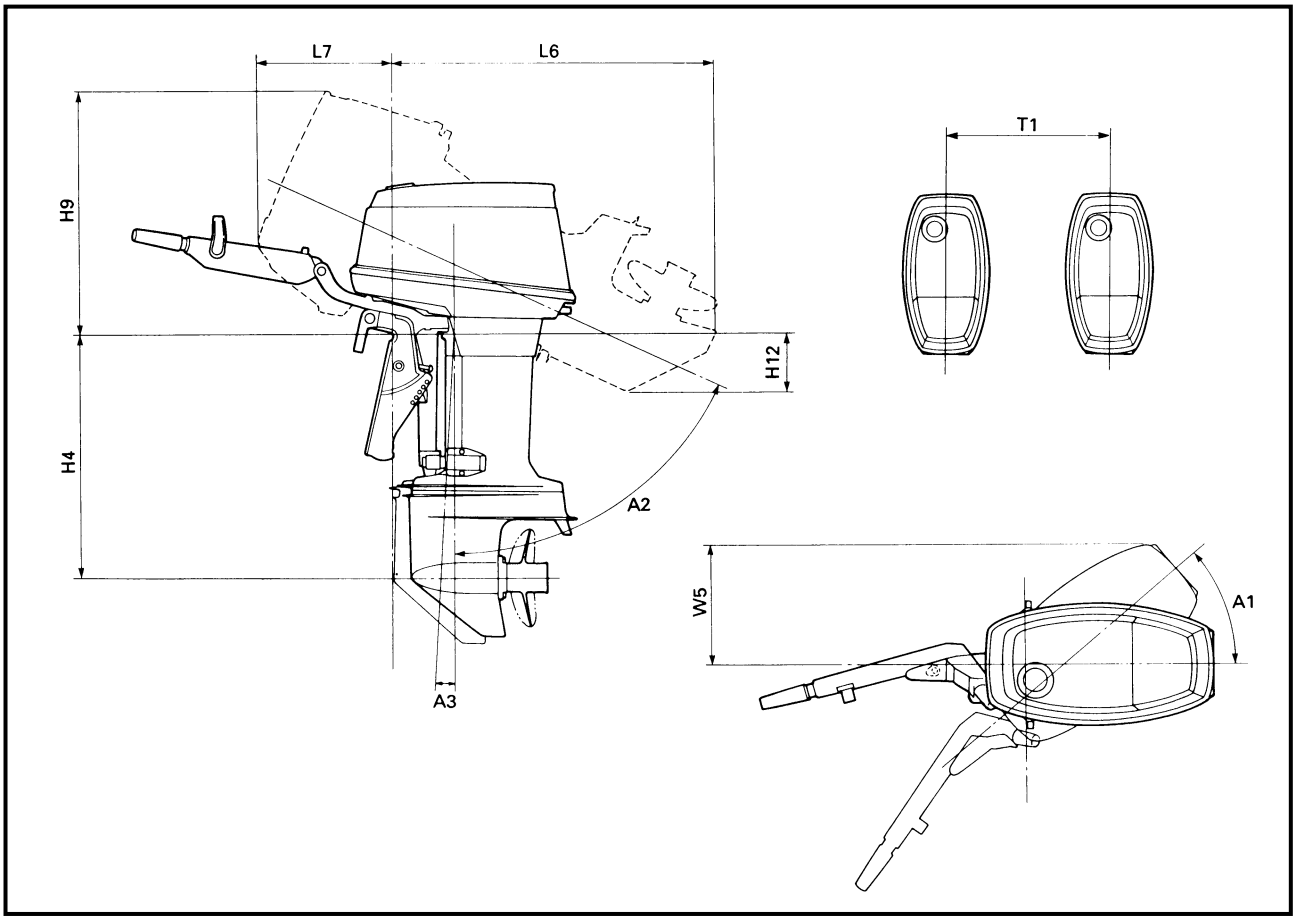

Item		Unit	Model		
			50 hp	60, 70 hp	75, 80, 90 hp
L6	S	mm (in)	—	868 (34.2)	—
	L		918 (36.1)	968 (38.1)	
	X		—	1,081 (42.6)	
L7	S	mm (in)	—	403 (15.9)	—
	L, X		411 (16.2)		457 (18.0)
H4	S	mm (in)	—	400 (15.7)	—
	L		520 (20.5)		
	X		—	648 (25.5)	647 (25.5)
H9	S	mm (in)	—	719 (28.3)	—
	L, X		706 (27.8)		730 (28.7)
H12	S	mm (in)	—	135 (5.3)	—
	L		204 (8.0)	205 (8.1)	203 (8.0)
	X		—	264 (10.4)	
W5		mm (in)	321 (12.6)		331 (13.0)
A1		degree	35		30
A2	S	degree	—	63	—
	L, X		67, 62*1		
A3	S	degree	—	0	—
	L, X		4		
T1		mm (in)	—		600 (23.6)*2

*1: For P60TH/60FEHTO, P75TH/75CEHTO
*2: Except for P75TH/75CEHTO, 90AEHD

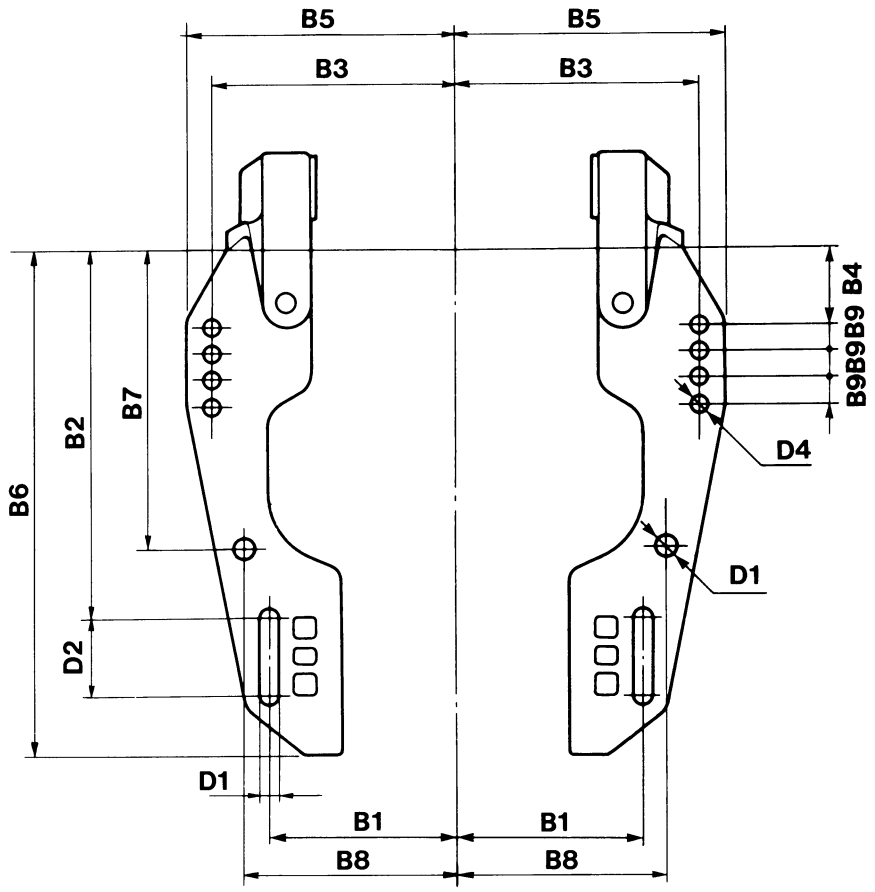

	Unit	Model			
		50 hp	60 hp	70 hp	75, 80, 90 hp
B1	mm (in)	125.4 (4.9)			
B2	mm (in)	254 (10.0)			
B3	mm (in)	163.5 (6.4)			
B4	mm (in)	50.8 (2.0)			
B5	mm (in)	180 (7.1)			
B6 S	mm (in)	—	329 (13.0)	—	
L, X		351 (13.8)			
B7	mm (in)	138.1 (5.4)			
B8	mm (in)	203.2 (8.0)			
B9	mm (in)	18.5 (0.7)			
D1	mm (in)	13 (0.5)			
D2	mm (in)	55.5 (2.2)			
D4	mm (in)	12 (0.5)			

C33000-0

TIGHTENING TORQUE

Parts to be tightened		Part name	Thread size	Q'ty 50, 60, 70 hp	Q'ty 75, 80, 90 hp	Tightening torque Nm	Tightening torque m • kg	Tightening torque ft • lb	Remarks
ENGINE:									
Crank case	1st	Bolt	M6	—	12	4	0.4	2.9	E
	2nd					12	1.2	8.7	
	1st	Bolt	M8	6	—	10	1.0	7.2	
	2nd					20	2.0	14	
	1st	Bolt	M10	8	8	20	2.0	14	
	2nd					40	4.0	29	
Connecting rod	1st	Bolt	M8	—	6	12	1.2	8.7	E
	2nd					35	3.5	25	
Cylinder head	1st	Bolt	M8	14	14	15	1.5	11	E
	2nd				—	32	3.2	23	
					14	30	3.0	22	
Exhaust cover	1st	Bolt	M6	16	—	3	0.3	2.2	E
	2nd					8	0.8	5.8	
	1st	Bolt	M8	—	18	9	0.9	6.5	
	2nd					18	1.8	13	
Intake manifold	1st	Bolt	M6	8	12	4	0.4	2.9	
	2nd				—	8	0.8	5.8	
					12	12	1.2	8.7	
Spark plug		Bolt	M14	3	3	25	2.5	18	
Flywheel		Nut	M20	1	1	160	16.0	115	E
Power unit mounting		Bolt	M8	8	11	21	2.1	15	
Starter motor mounting		Bolt	M8	2	2	20	2.0	14	LT 242
Straight screw plug		Screw	M12	1	1	23	2.3	1.7	
UPPER CASE AND GEAR CASE:									
Upper mount rubber		Nut	M10	2	2	24	2.4	17	LT 271
Bracket bolt		Nut	M22	1	1	15	1.5	11	
Upper case mounting		Bolt	M8	11	11	21	2.1	15	
Exhaust guide		Bolt	M8	4	4	21	2.1	15	
Exhaust manifold		Bolt	M8	4	4	21	2.1	15	LT 572
Muffler		Bolt	M8	4	4	21	2.1	15	LT 572
Ring nut		Nut	—	1	—	130	13	94	50 hp
				1	1	145	14.5	105	
Pinion nut		Nut	M12	1	—	75	7.5	54	E 50 hp
		Nut	M16	1	1	95	9.5	69	E
Lower case mounting		Bolt	M10	5	5	40	4.0	29	
Propeller		Nut	M16	1	1	35	3.5	25	
Tiller handle mounting		Nut	M10	1	1	38	3.8	27	
Handle bracket mounting		Nut	M10	2	2	38	3.8	27	

TIGHTENING TORQUE/ GENERAL TORQUE SPECIFICATIONS

Parts to be tightened	Part name	Thread size	Q'ty		Tightening torque			Remarks
			50, 60, 70 hp	75, 80, 90 hp	Nm	m • kg	ft • lb	
POWER TRIM AND TILT:								
Tilt cylinder end screw	Screw	—	1	—	80	8.0	58	6H308
				1	90	9.0	65	6H1-15, 62F-02
Trim cylinder end screw	Screw	—	2	—	70	7.0	50	6H308
				2	160	16.0	115	6H1-15, 62F-02
Fluid-level plug	Bolt	—	1	—	3	0.3	2.2	6H308
				1	7	0.7	5.1	6H1-15, 62F-02
Lock nut	Nut	—	6	—	10	1.0	7.2	6H308
				6	15	1.5	11	6H1-15, 62F-02
Valve spring mounting	Screw	—	2	2	4	0.4	2.9	6H1-15, 62F-02
Valve lock screw	Screw	—	1	—	13	1.3	9.4	6H308
				1	4	0.4	2.9	6H1-15, 62F-02
Gear pump mounting	Bolt	M6	3	—	5	0.5	3.6	6H308
				3	4	0.4	2.9	6H1-15, 62F-02
Manual valve	Screw	—	1	1	3	0.3	2.2	
Main valve	Screw	—	2	—	10	1.0	7.2	6H308
				2	11	1.1	8.0	6H1-15, 62F-02

Nut (A)	Bolt (B)	General torque specifications		
		Nm	m•kg	ft•lb
8 mm	M5	5.0	0.5	3.6
10 mm	M6	8.0	0.8	5.8
12 mm	M8	18	1.8	13
14 mm	M10	36	3.6	25
17 mm	M12	43	4.3	31

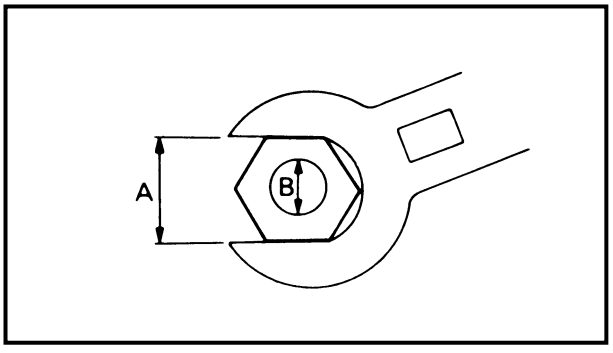

GENERAL TORQUE SPECIFICATIONS

This chart specifies the torque for tightening standard fastners with standard fastners with standard clean dry ISO threads at room temperature. Torque specifications for special components or assemblies are given in applicable sections of this manual. To avoid causing warpage, tighten multifastener assemblies in crisscross fashion and in progressive stages a until the specified torque is reached.

CHAPTER 3
PERIODIC INSPECTION AND ADJUSTMENT

PERIODIC SERVICE 3-1
MAINTENANCE SCHEDULE 3-1
ANODE 3-1
BATTERY 3-2
CARBURETOR 3-3
CARBURETOR LINK ADJUSTMENT 3-3
CYLINDER HEAD BOLTS, ENGINE MOUNTING BOLTS, AND FLYWHEEL NUT 3-4
FUEL FILTER 3-4
FUEL TANK AND FUEL LINE 3-4
GEAR OIL 3-5
IDLE-SPEED 3-5
IGNITION TIMING ADJUSTMENT 3-6
TIMING PLATE POSITION ADJUSTMENT 3-6
THROTTLE SENSOR CONTROL LINK ADJUSTMENT 3-7
IGNITION TIMING ADJUSTMENT 3-8
PICK-UP TIMING ADJUSTMENT 3-9
OIL INJECTION PUMP 3-10
OPERATIONAL TEST 3-10
CHECKING THE OIL LEVEL WARNING SYSTEM 3-11
OIL PUMP LINK ADJUSTMENT 3-12
POWER TRIM AND TILT FLUID (PTT model) 3-12
PROPELLER 3-13
SPARK PLUG 3-13
GREASING POINTS 3-14

D30000-1*

PERIODIC SERVICE

MAINTENANCE SCHEDULE

The following chart may be taken as a helpful guide to the intervals between maintenance procedures.

Item \ Intervals	Initial		Every		Refer page
	10 hours (Break-in)	50 hours (3 months)	100 hours (6 months)	200 hours (1 year)	
Anode		○	○		3-1
Battery	○ (every month)	○	○		3-2
Carburetor	○	○	○		3-3
Carburetor link	○			○	
Cylinder head bolts, engine mounting bolts, and flywheel nut	○		○		3-4
Fuel filter	○	○	○		3-4
Fuel tank and fuel line	○		○	○	
Gear oil	○		○		3-5
Idle-speed	○		○		
Ignition timing	○		○		3-6
Oil injection pump	○				3-10
Oil level warning system	○		○		3-11
Oil pump link	○				3-12
Power trim and tilt system	○	○	○	○	
Propeller	○	○	○		3-13
Spark plug	○	○	○		

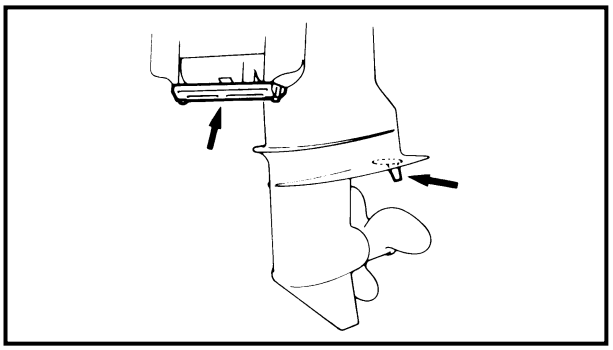

D31000-0

ANODE

Inspect the anode. If it is worn out, replace it with a new one. If scaling of the surface is evident, remove the anode, clean it with a wire brush and remove all trace of oil or grease. After cleaning, polish the contact surfaces of the anode mount and re-install.

CAUTION:

Never paint the anode. To ensure good electrical contact, keep the anode contact surface clean of oil or grease.

D31305-0*

BATTERY

⚠ WARNING

Battery electrolyte is dangerous; it contains sulfuric acid which is poisonous and highly caustic.

Always follow these preventive measures:

- **Avoid bodily contact with electrolyte as it can cause severe burns or permanent eye injury.**
- **Wear protective eye gear when handling or working near batteries.**

Antidote (EXTERNAL):

- **SKIN - Wash with water.**
- **EYES - Flush with water for 15 minutes and get immediate medical attention.**

Antidote (INTERNAL):

- **Drink large quantities of water or milk followed with milk of magnesia, beaten egg or vegetable oil. Get immediate medical attention.**

Batteries generate explosive, hydrogen gas. Always follow these preventive measures:

- **Charge batteries in a well-ventilated area.**
- **Keep batteries away from fire, sparks or open flames (e.g., welding equipment, lighted cigarettes).**
- **DO NOT SMOKE when charging or handling batteries.**

KEEP BATTERIES AND ELECTROLYTE OUT OF REACH OF CHILDREN.

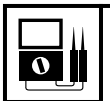

Recommended battery capacity:
Rating.....12V 70AH (252 kC)
Minimum cold crank performance ..... 380 Amps at –17.8˚C (0˚F)
Minimum reserve capacity ..... 124 minutes at 26.7˚C (80˚F)

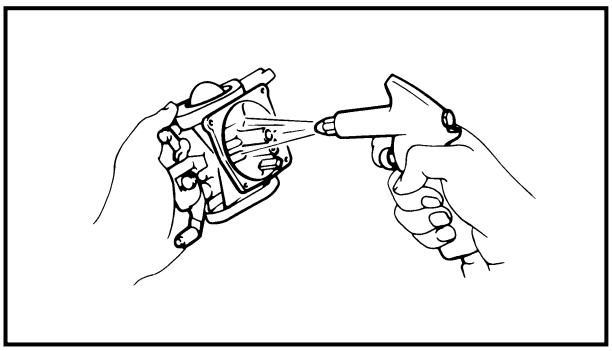

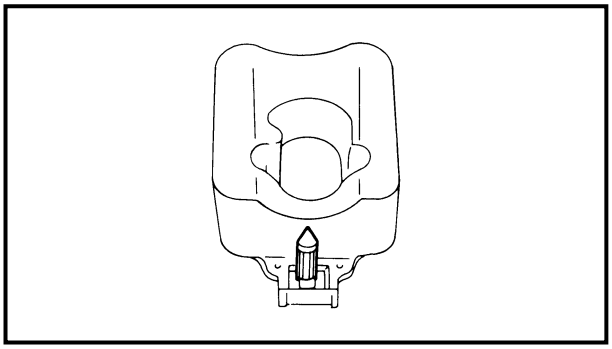

D31600-1

CARBURETOR

1. Check the fuel passages and air passages for fouling or clogging. Clean fouled parts with suitable cleaning solvent and blow out clogged passages with compressed air.

⚠ WARNING

Protect your eyes with suitable safety glasses or safety goggles when using compressed air.

2. Check the needle-valve for wear and replace it if worn.

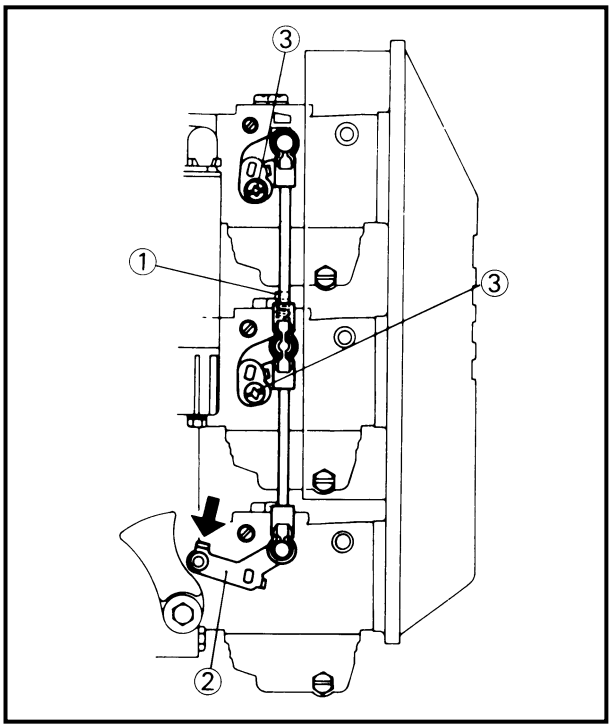

D31902-1*

CARBURETOR LINK ADJUSTMENT

(50, 60, 70 hp)

1. Loosen the idle adjust screw and fully close the throttle valve.
2. Loosen the throttle lever securing screws of upper and middle carburetors by turning clockwise.
3. While lightly pushing the throttle lever of the lower carburetor in the direction of the arrow (full-closed), tighten the throttle lever securing screw of the upper middle carburetors by turning counterclockwise.

① Idle adjust screw
② Throttle lever
③ Throttle lever securing screw

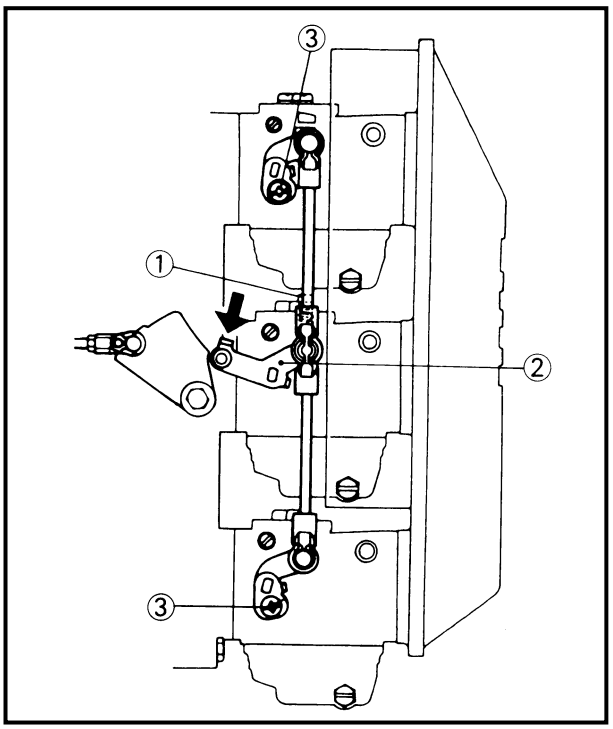

(75, 80, 90 hp)

1. Loosen the idle adjust screw and fully close the throttle valve.
2. Loosen the throttle lever securing screws of upper and lower carburetors by turning clockwise.
3. While lightly pushing the throttle lever of the middle carburetor in the direction of the arrow (full-closed), tighten the throttle lever securing screw of the upper and lower carburetors by turning counterclockwise.

① Idle adjust screw
② Throttle lever
③ Throttle lever securing screw

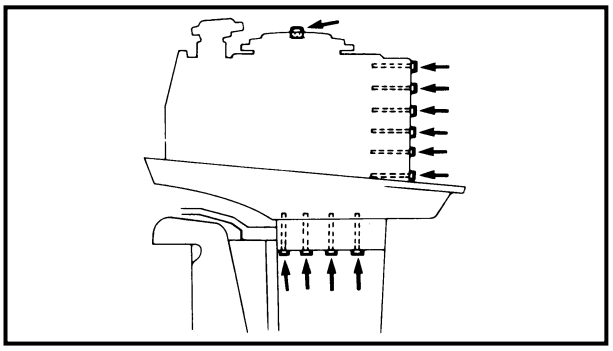

D32000-0

CYLINDER HEAD BOLTS, ENGINE MOUNTING BOLTS, AND FLYWHEEL NUT

1. Retighten to specifications.
2. Check other fixings and tighten if necessary.

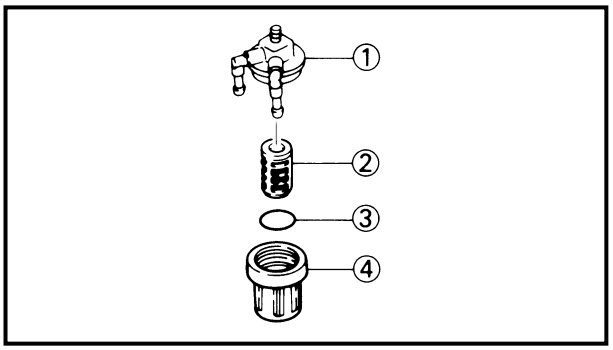

D32300-0

FUEL FILTER

Clean the strainer of dust and impurities.

① Strainer body
② Strainer
③ O-ring
④ Strainer cup

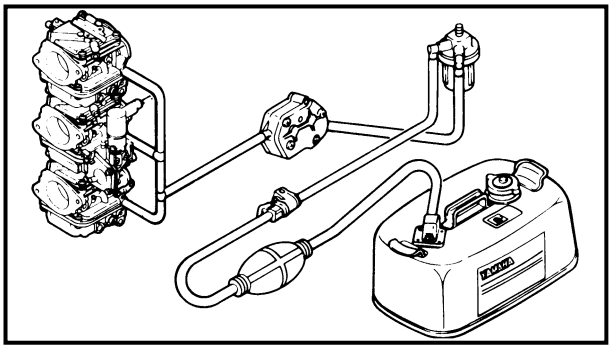

D32600-0

FUEL TANK AND FUEL LINE

1. Check the fuel tank and fuel line for leaks.
2. Clean the fuel tank thoroughly.

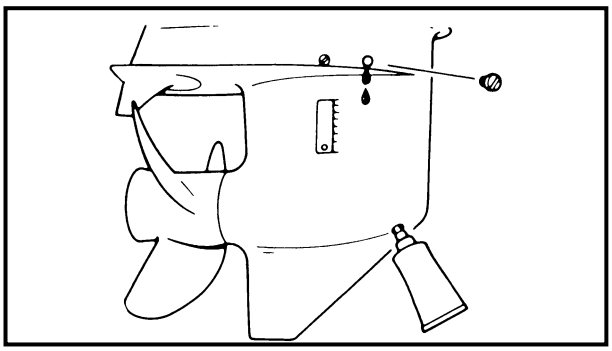

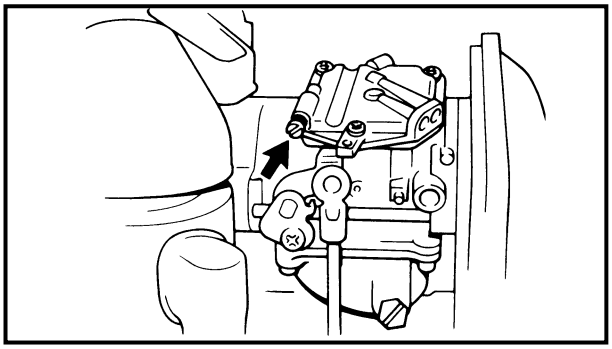

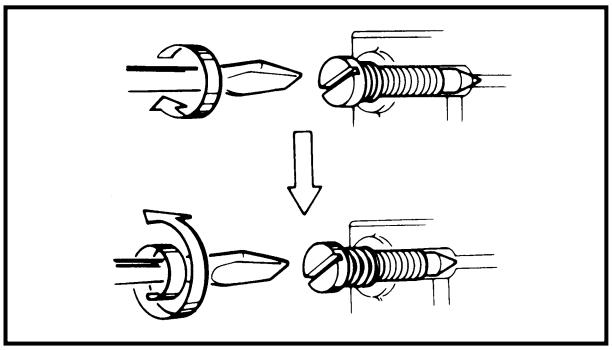

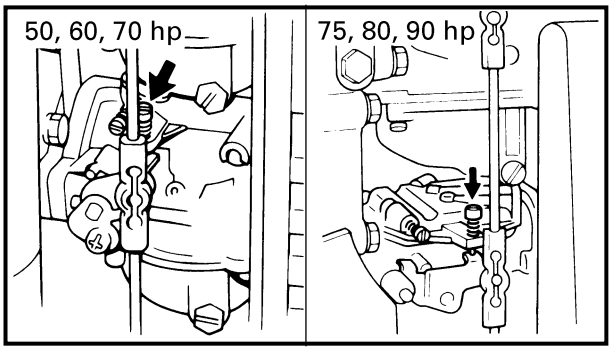

D32900-0

GEAR OIL

1. Drain the gear oil thoroughly and pour in new oil.
2. Check for water or metallic sediment in the drained oil.

NOTE:

If the gear oil becomes "milky", check the gear case oil seals and shift boot for water entry.

D33000-0*

IDLE-SPEED

1. Turn the pilot screw until it is lightly seated.
2. Turn the pilot screw outward to the specified setting.

Pilot screw [stamped mark]:
62F00, 6H210, 6H007, 6H015:
1-3/8 ± 1/4 turns out
6H20A: 1-1/2 ± 1/4 turns out
6H30A, 6H107:
1-1/4 ± 1/4 turns out

3. Start the motor and allow it to warm up for a few minutes.
4. Set the idle-speed to the specified level by setting the throttle stop-screw. Use a tachometer for checking the speed when adjusting the motor speed.

NOTE:

Turning the throttle stop-screw clockwise increases the motor speed; turning it counterclockwise decreases the motor speed.

Tachometer:
YU-8036-A/90890-06760

Idle speed:
800 ± 50 rpm

D33304-0*

IGNITION TIMING ADJUSTMENT

TIMING PLATE POSITION ADJUSTMENT

If the timing plate is moved even a little during inspection or repair operation, it should be set in the following way:
This adjustment must be made before adjusting the ignition timing.

1. Remove the spark plugs from the cylinders.

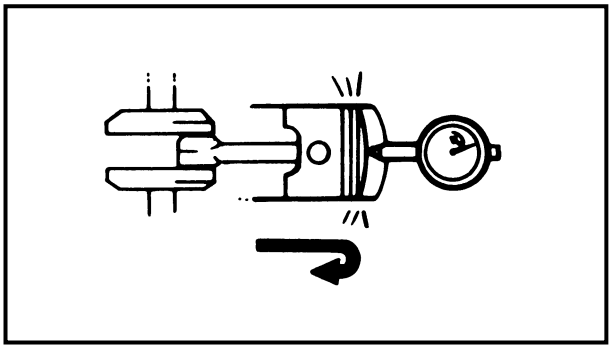

2. Install a dial-gauge in the spark-plug hole of No. 1 cylinder.

NOTE:
For easy timing-plate adjustment, it is advisable to remove the spark plugs from all the cylinders.

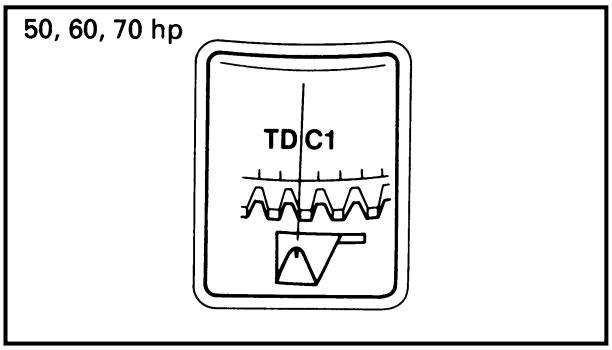

3. Slowly turn the flywheel CLOCKWISE, and stop it when the piston is at TDC.

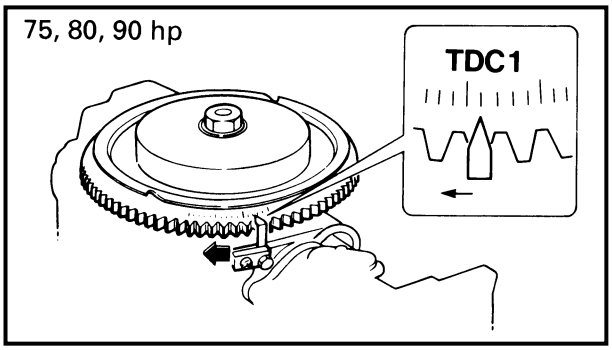

4. If the end of the timing plate is not aligned with the TDC mark on the CDI magneto rotor, loosen the timing plate set screw, align the timing plate end with the TDC mark, then tighten the screw.

5. Remove the dial gauge from the No. 1 cylinder and install the spark plugs for each cylinder.

NOTE:
After tightening the screw, paint over the screw-head to discourage tampering with the adjustment.

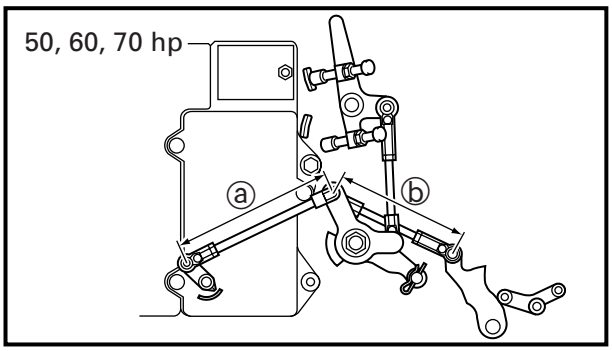

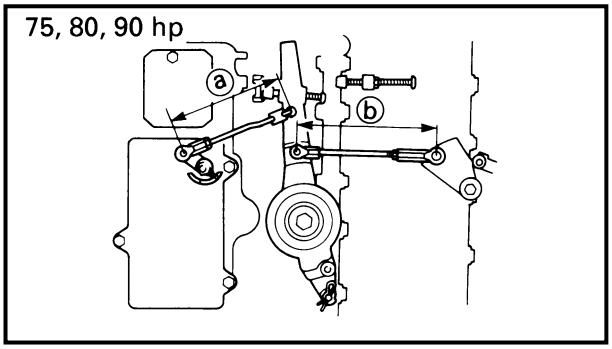

THROTTLE SENSOR CONTROL LINK ADJUSTMENT

1. Adjust the lengths of the throttle sensor control link and throttle cam control link to specifications.

Throttle sensor control link length ⓐ:
50, 60, 70 hp: 120 ± 0.5 mm (4.72 ± 0.02 in)
75, 80, 90 hp: 93.5 ± 0.5 mm (3.68 ± 0.02 in)
Throttle cam link length ⓑ:
50, 60, 70 hp: 95 mm (3.74 in)
75, 80, 90 hp: 120.5 mm (4.74 in)

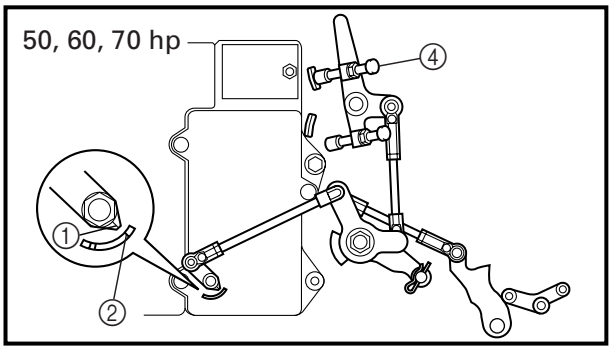

2. Adjust the length of the full-retard adjusting screw so that when the full-retard adjusting screw contacts the stopper, the full-retard indication on the CDI unit aligns with the timing indicator.

① Timing indicator
② Full-retard indication (50, 60, 70 hp)
③ Full-retard indication (75, 80, 90 hp)
④ Full-retard adjusting screw

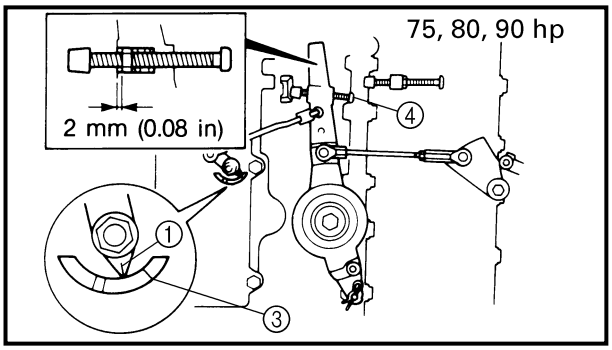

NOTE:
The nut in the magneto control lever should be 2 mm (0.08 in) off from the end of the magneto control lever.

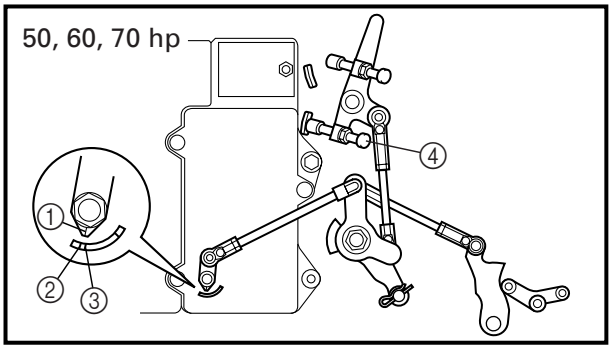

3. Adjust the length of the full-advance adjusting screw so that when the full-advance adjusting screw contacts the stopper, the full-advance indication on the CDI unit aligns with the timing indicator.

① Timing indicator
② Full-advance indication (50, 60 hp)
③ Full-advance indication (70 hp)
④ Full-advance adjusting screw

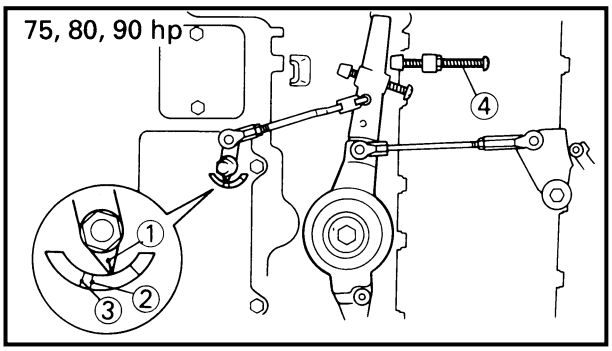

① Timing indicator
② Full-advance indication (75, 80 hp)
③ Full-advance indication (90 hp)
④ Full-advance adjusting screw

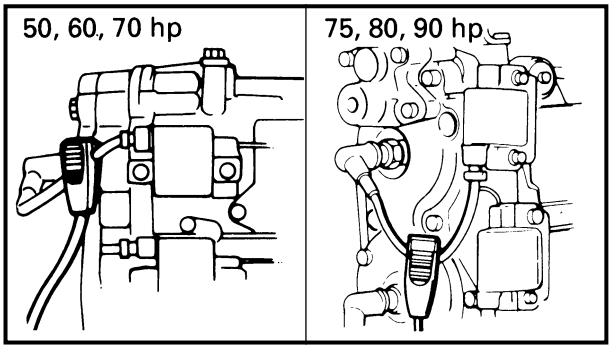

IGNITION TIMING ADJUSTMENT

CAUTION:

When checking ignition timing using a timing light, be sure to replace the propeller with the specified test propeller, and make tests with the machine placed in a test tank.

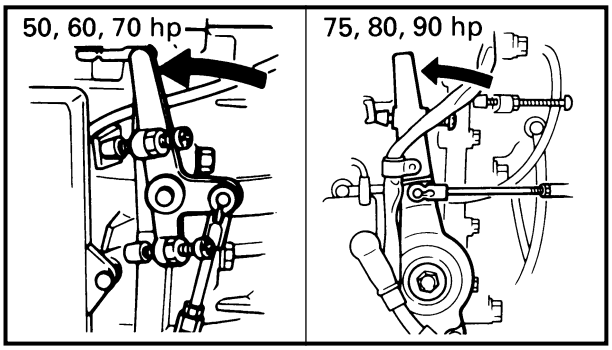

NOTE:

Before adjusting, be sure to warm up the engine.

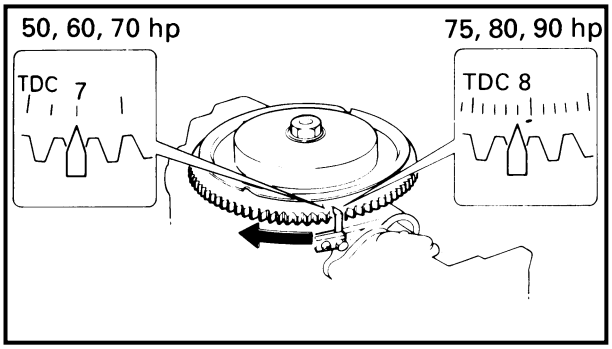

1. Attach the timing light and tachometer to the No. 1 cylinder high tension code.
2. While keeping the stopper in contact with the full-retard adjusting screw, measure the full-retard ignition timing with the timing light.
   If the timing is out of specification, adjust it by turning the full-retard adjusting screw.

NOTE:

When measuring the full-retard ignition timing, keep the specified engine speed.

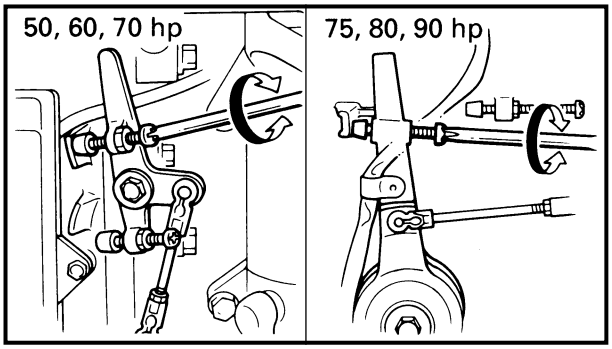

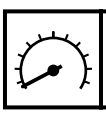

Full-retard side engine speed:
800 ± 50 rpm



Full-retard side ignition timing:
50, 60, 70 hp: 7 ± 1° ATDC
75, 80, 90 hp: 8 ± 1° ATDC

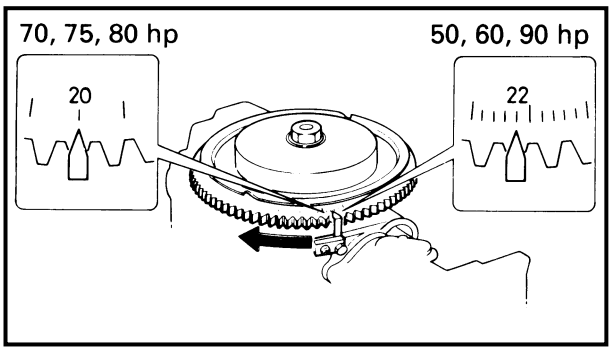

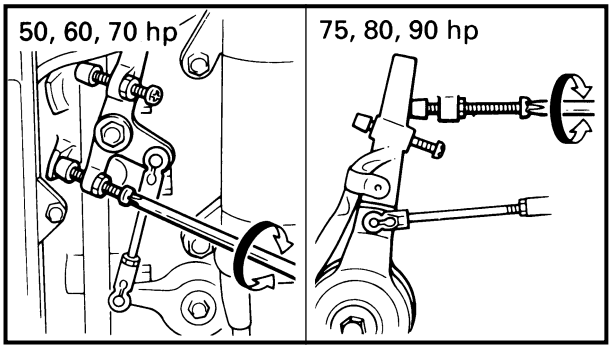

3. While keeping the stopper in contact with the full-advance adjusting screw, measure the full-retard ignition timing with the timing light.
   If the timing is out of specification, adjust it by turning the full-advance adjusting screw.

NOTE:
When measuring the full-advance ignition timing, keep the specified engine speed.

Full-advance side engine speed:
50, 60, 75, 80, 90 ph:
5,000 ± 500 rpm
70 hp:
5,500 ± 500 rpm

Full-advance side ignition timing:
50, 60, 90 hp: 22 ± 1° BTDC
70, 75, 80 hp: 20 ± 1° BTDC

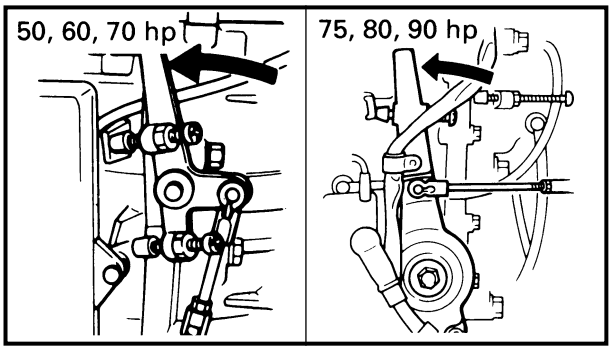

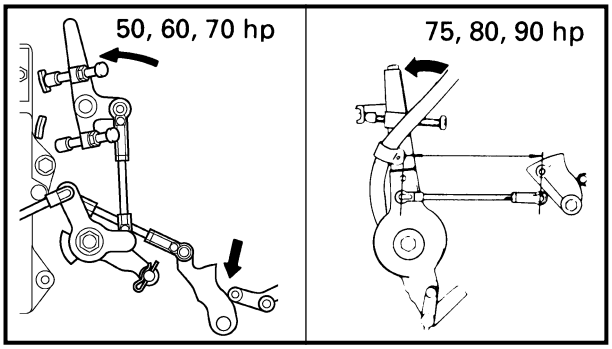

PICK-UP TIMING ADJUSTMENT

NOTE:
Engine idle speed should be adjusted properly before adjusting the pick-up timing.

1. Turn the magneto control lever to the full-retard position.
2. Bring the throttle cam to lightly contact the throttle lever roller. (The throttle valve should not open.)
   Adjust the accelerator link length and connect magneto control lever to the accelerator cam.

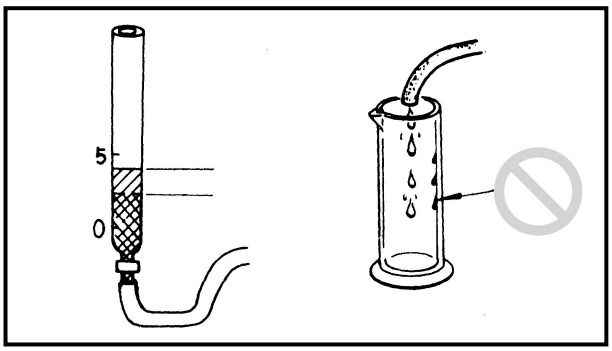

D34000-0*

OIL INJECTION PUMP

OPERATIONAL TEST

1. Start the engine and set the idling speed at 1,500 rpm by adjusting the throttle-stop lever.

CAUTION:

Use only oil-mixed fuel (50:1) as malfunction or engine seizure may otherwise result.

2. Remove the oil-pump link-rod and fix the oil-pump lever in the full-throttle position.

3. Measure the oil discharge from each port for three minutes using a measuring cylinder graduated in steps of at least 0.1 cc to confirm that the specified amount is discharged.

Specified discharge:
(3 min/1 cylinder)
50 hp:
1.90 ± 0.50 cm³ (0.064 ± 0.017 US oz, 0.067 ± 0.018 Imp oz)
60, 70 hp:
2.20 ± 0.50 cm³ (0.074 ± 0.017 US oz, 0.077 ± 0.018 Imp oz)
75, 80, 90 hp:
3.10 ± 0.70 cm³ (0.105 ± 0.024 US oz, 0.0109 ± 0.025 Imp oz)

NOTE:

Oil temperature: 10 ~ 30°C (50 ~ 86°F)

1. Before measuring, bleed the pump completely and ensure no air-bubbles are present in the oil flowing out of the oil feed pipe.
2. When measuring with the measuring cylinder, ensure that no oil clings to the cylinder wall, otherwise the measurement will be inaccurate.
3. Use only genuine Yamaha oil. If the viscosity is too high or too low, the measurement of the discharge will be inaccurate.
4. The longer the time over which measurement is made, the more accurate will be the measurement. Calculate the rate of discharge per minute.

D33900-0*

CHECKING THE OIL LEVEL WARNING SYSTEM

1. Fill the oil-tank with oil.
2. Start the engine.
3. By letting the oil little by little out of the drain-hose, check that the oil-level warning system operates correctly.

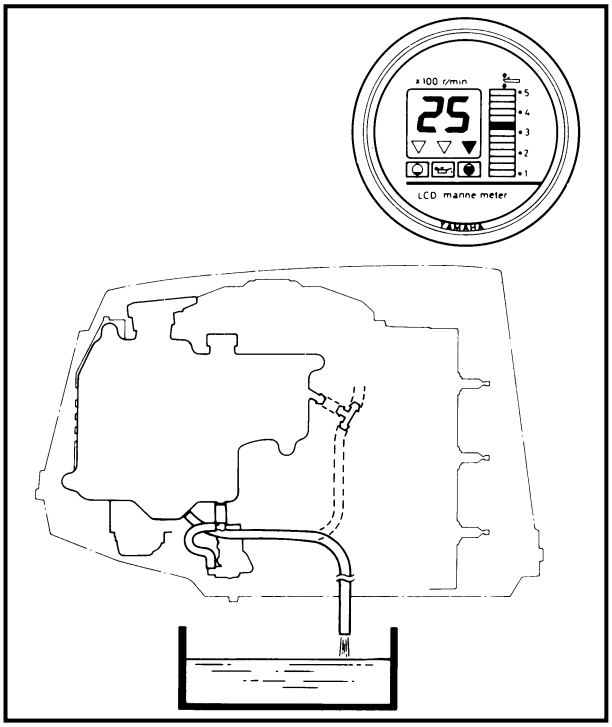

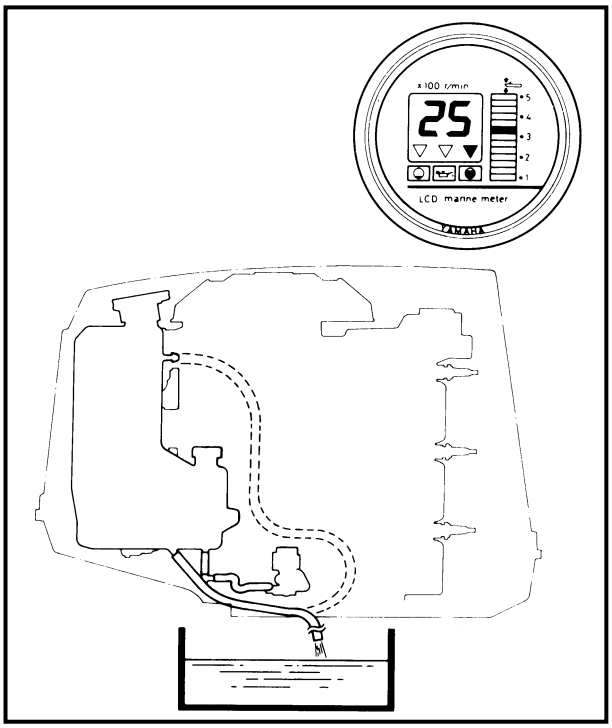

CAUTION:

Do not allow the engine to operate without oil even briefly for this will cause malfunction or engine seizure.

50, 60, 70 hp

Case	Oil level	Oil level warning lamp	Warning buzzer	Speed drop function
1	More than 770 cm^3 (0.81 US qt)	GREEN	OFF	OFF
2	770 cm^3 (0.31 Us qt) ~ 280 cm^3 (0.3 US qt)	YELLOW	OFF	OFF
3	280 cm^3 or less (0.3 US qt)	RED	ON	ON

75, 80, 90 hp

Case	Oil level	Oil level warning lamp	Warning buzzer	Speed drop function
1	More than 1,130 cm^3 (1.19 US qt)	GREEN	OFF	OFF
2	1,130 cm^3 (1.19 Us qt) ~ 310 cm^3 (0.33 US qt)	YELLOW	OFF	OFF
3	310 cm^3 or less (0.33 US qt)	RED	ON	ON

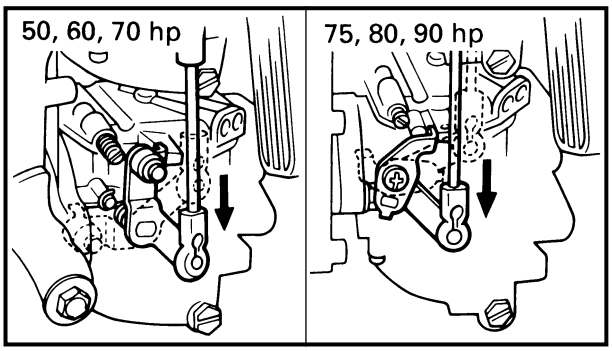

D34300-1

OIL PUMP LINK ADJUSTMENT

1. Fully-open the carburetor throttle valve.

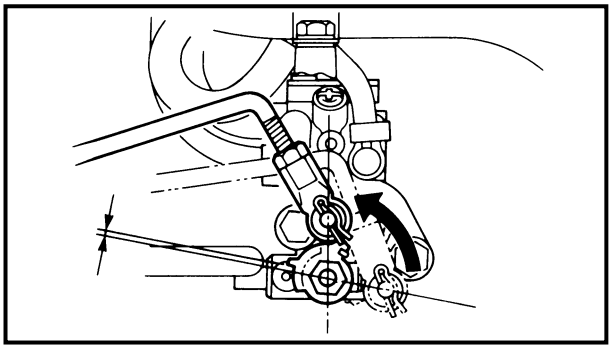

2. Set the oil-pump lever 1 mm off full-open side stopper. With the lever in this position, adjust the length of the rod connecting the oil-pump to the carburetor and tighten the locknut.
3. Install the connecting-rod.
4. By operating the carburetor, check that the throttle-valve opens fully.

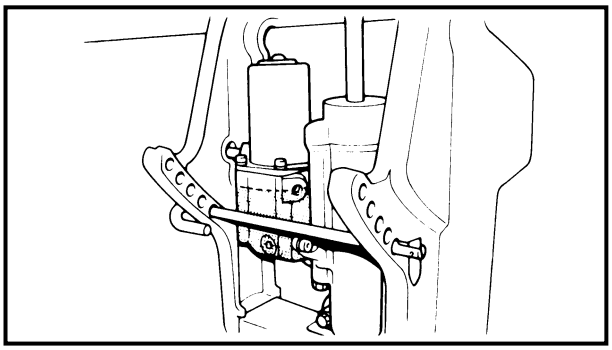

D34600-0

POWER TRIM AND TILT FLUID (PTT model)

1. Tilt-up the motor and lock it with the tilt-lock lever.
2. Remove the fluid-level plug to check the fluid level. With the motor tilted-up, the fluid level should be immediately below the fluid-hole. If the fluid level is low, top up with the recommended fluid.

ATF
(automatic transmission fluid)

CAUTION:

When checking the fluid level (with the unit removed from the engine), hold the unit in the vertical position and set the tilt-rod in the tilt-up position.

3. Re-fit the fluid-level plug and tighten it.

Fluid-level plug:
Short transom [6H308]:
3 Nm (0.3 m • kg, 2.2 ft • lb)
Long transom [6H1-15, 62F-02]:
7 Nm (0.7 m • kg, 5.1 ft • lb)

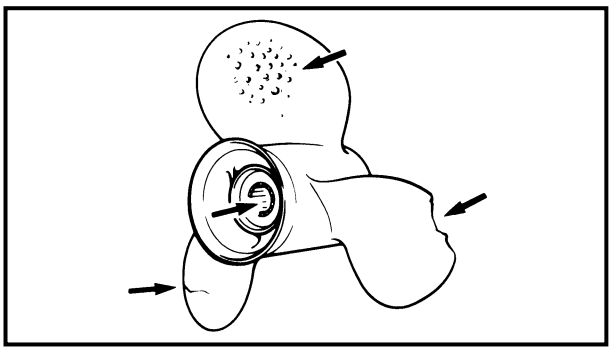

D34900-0

PROPELLER

1. Check the blades for wear, damage or cavitation erosion.
2. Check the spline for wear and damage.

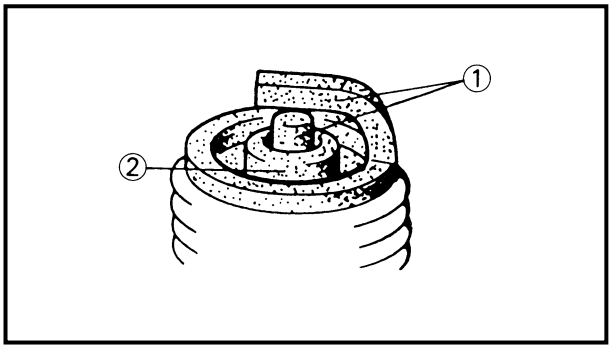

D35000-0*

SPARK PLUG

1. Check the electrode ① condition and state of wear, note the insulator ② color and the electrode gap.
   Normal condition is a medium to light tan color.
   Distinctly different color → Check the engine condition.
   - White color : Lean fuel mixture
     - Plugged filter, jet
     - Air leak
     - Wrong settings
   - Blackish color : Electrical malfunction
     - Defective spark plug

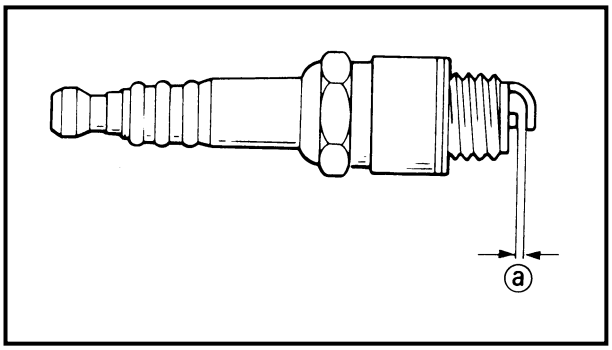

2. Clean the spark plug with spark-plug cleaner or wire brush. Use a wire gauge to adjust the plug gap ⓐ to specification.

Spark plug gap:
0.9 ~ 1.0 mm (0.035 ~ 0.039 in)

3. If the electrode becomes too worn, replace the spark plug.

Standard spark plugs:

	Except for Canada, Europe, China and South Africa	For Canada, Europe, China and South Africa
50 hp	BR8HS-10	BR8HS-10
60, 70, 75, 80, 90 hp	B8HS-10	BR8HS-10

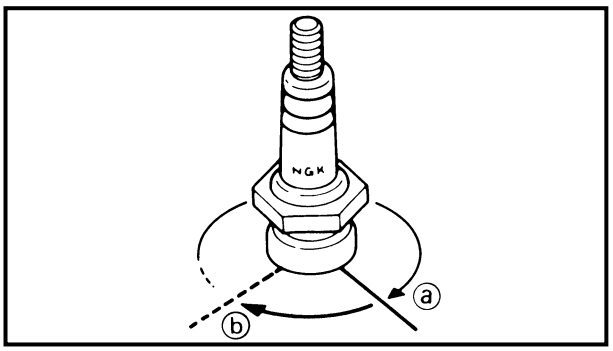

4. When installing the spark plug, clean the gasket surface, wipe off any grime that may be on the surface of the plug and screw in the spark plug to the correct torque.

	Tightening torque: **25 Nm (2.5 m • kg, 18 ft • lb)**

NOTE:

If a torque wrench is not available, a good estimate of the correct torque is a further 1/4 to 1/2 turns ⓑ on finger-tightened ⓐ spark plug.

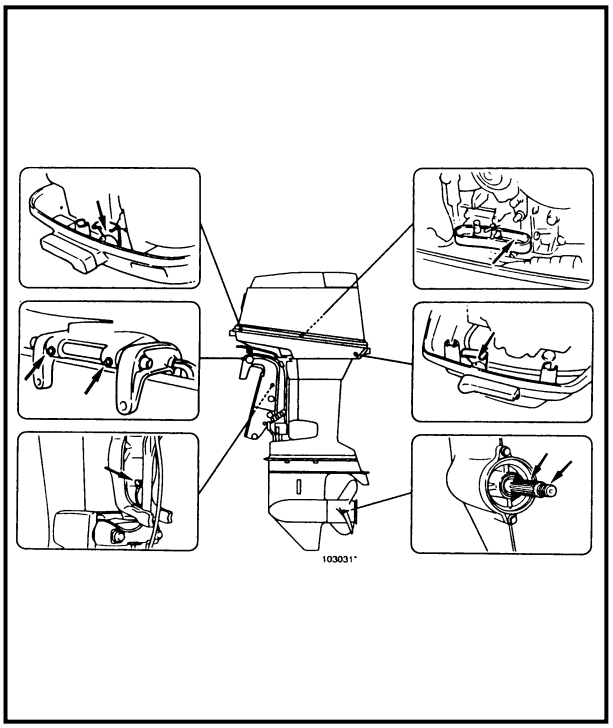

GREASING POINTS

1. Apply:
   - Water resistant grease

CHAPTER 4
FUEL SYSTEM

FUEL SYSTEM 4-1
EXPLODED DIAGRAM 4-1
FUEL LINE 4-2
REMOVAL 4-3
CLEANING AND INSPECTION 4-3
FUEL TANK 4-3
FUEL METER COMPLETE 4-4
PRIMING PUMP 4-4
FUEL FILTER 4-4
FUEL JOINTS 4-5
FUEL PUMP 4-5
INSTALLATION 4-5

CARBURETOR 4-6
EXPLODED DIAGRAM (Except for C60ER, C60TR, C75TR) 4-6
EXPLODED DIAGRAM (For C60ER, C60TR, C75TR) 4-7
REMOVAL AND DISASSEMBLY 4-8
INSPECTION 4-9
CARBURETOR BODY 4-9
NEEDLE VALVE 4-9
PILOT SCREW 4-9
COLLAR 4-9
FLOAT 4-9
ENRICHING FUEL PUMP 4-10
ELECTROTHERMAL VALVE 4-10
ASSEMBLY 4-11
INSTALLATION 4-13

OIL-INJECTION SYSTEM (Oil injection model) 4-14
EXPLODED DIAGRAM 4-14
REMOVAL 4-16
CLEANING AND INSPECTION 4-16
OIL-TANK 4-16
OIL-LEVER SENSOR 4-16
OIL-HOSES 4-16
INSTALLATION 4-16

E20000-1

FUEL SYSTEM
EXPLODED DIAGRAM

① Carburetor
② Electrothermal valve*
③ Fuel pump assembly
④ Fuel filter assembly
⑤ Fuel joint
⑥ Priming pump
⑦ Fuel meter assembly
⑧ Fuel tank cap
⑨ Fuel tank

* Except for C60ER, C60TR, C75TR

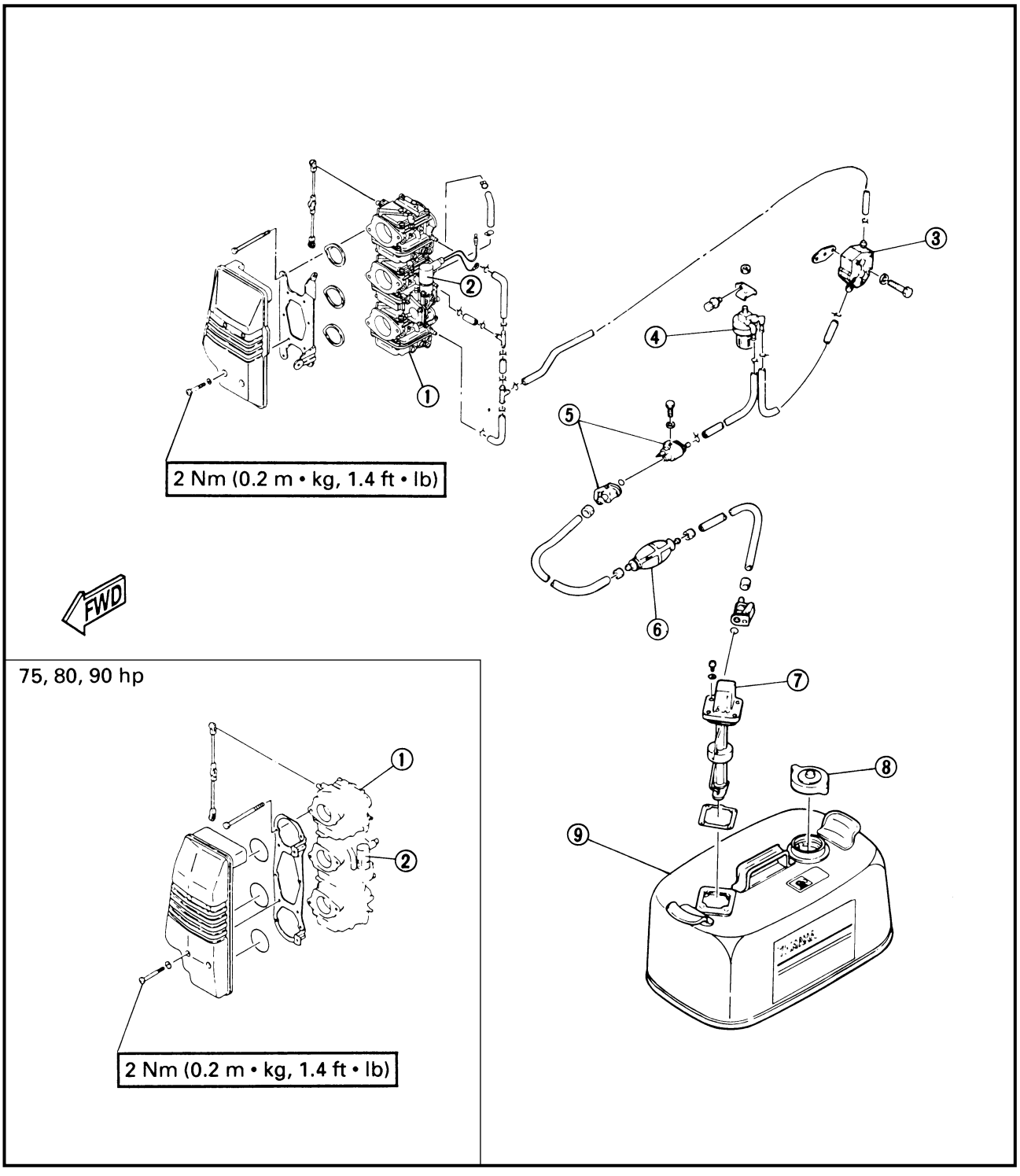

D22500-0

FUEL LINE

Check that the fuel line is correctly installed.

50, 60, 70 hp

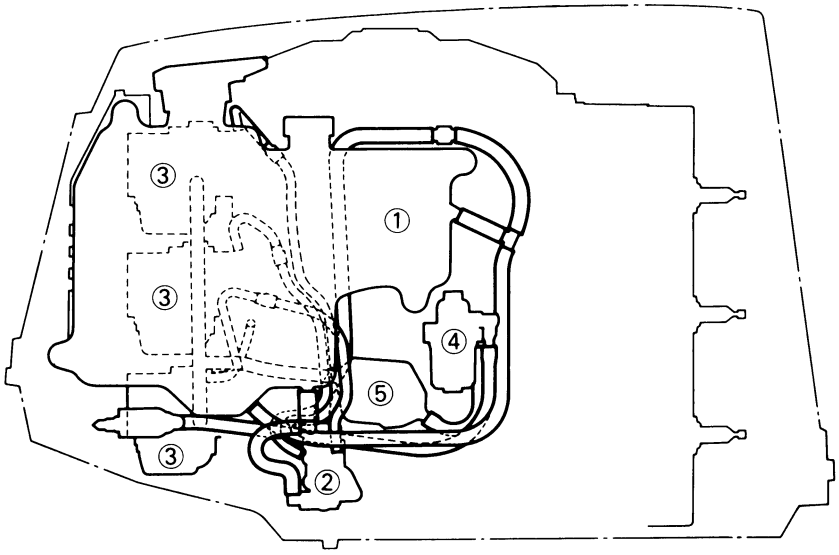

① Oil tank*
② Oil injection pump*
③ Carburetor
④ Fuel filter
⑤ Fuel pump

75, 80, 90 hp

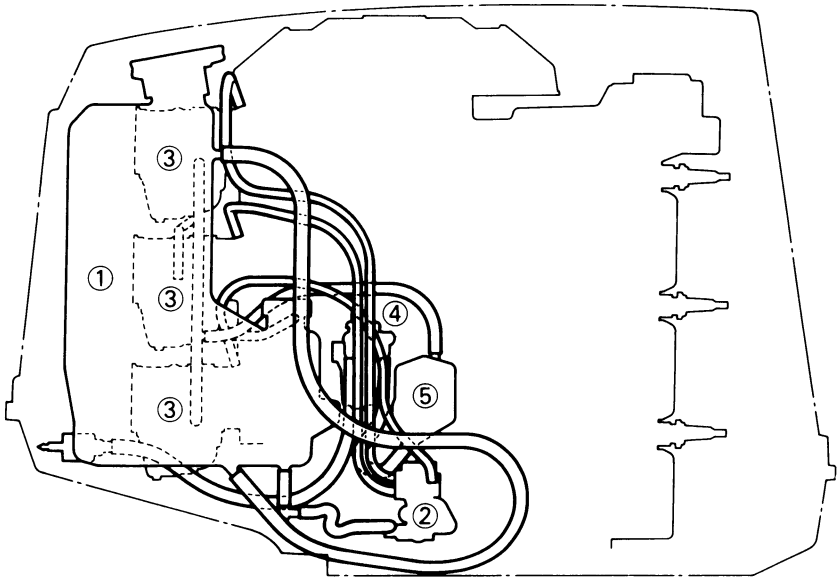

① Oil tank*
② Oil injection pump*
③ Carburetor
④ Fuel filter
⑤ Fuel pump

* Oil injection model

REMOVAL

⚠ WARNING

1. Fire prevention
Gasoline (petrol) is highly flammable. Petroleum vapour is explosive if ignited. Do not smoke while handling and keep it away from heat, sparks and open flames.
2. Ventilation
Petroleum vapour is heavier than air and if inhaled in large quantities will not support life. Engine exhaust gases are harmful to breathe. When test-running an engine indoors, maintain good ventilation.
3. Spillage
Remember that fuel remains in the fuel hose between the fuel joint and the carburetor. Drain all remaining fuel out into a container, or soak it up with a cloth so that the fuel does not spill onto the bottom cowling.
4. Leaks
Failure to check for and correct fuel leaks may result in fire or explosion.

1. Referring to the exploded diagram, remove the fuel line.

E21010-0

CLEANING AND INSPECTION

FUEL TANK

1. Add a small quantity of a suitable cleaning solvent into the fuel tank and thoroughly clean the tank interior by shaking the tank.
2. Drain off the cleaning solvent completely.

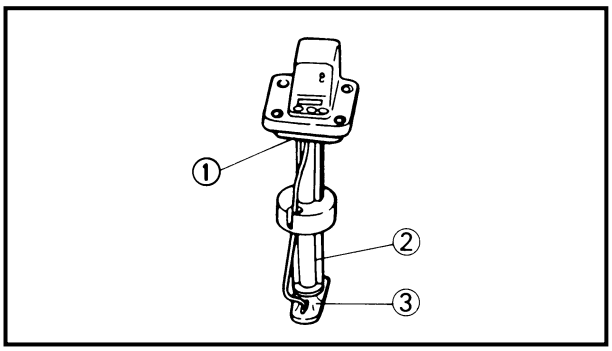

E21020-0

FUEL METER COMPLETE

1. Using a soft brush and solvent, clean the strainer on the end of the suction pipe and blow-dry it with compressed air.
2. Visually inspect the strainer for damage and replace the fuel meter complete if required.
3. Inspect the fuel meter components for cracks and replace the fuel meter complete if required.
4. Re-install the fuel meter complete with the rubber gasket to the fuel tank, ensuring that there are no leaks between the fuel meter and the fuel tank.

① Fuel meter assembly
② Suction pipe
③ Fuel strainer

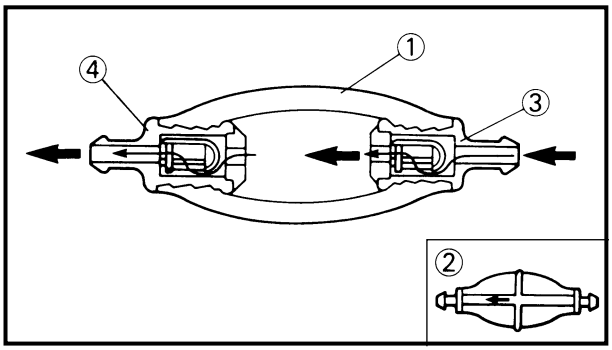

E21030-0

PRIMING PUMP

1. Visually inspect for cracks or breaks in the priming-pump and fuel-hoses and replace them if required.
2. Check the operation of the check-valve by blowing into the pump.

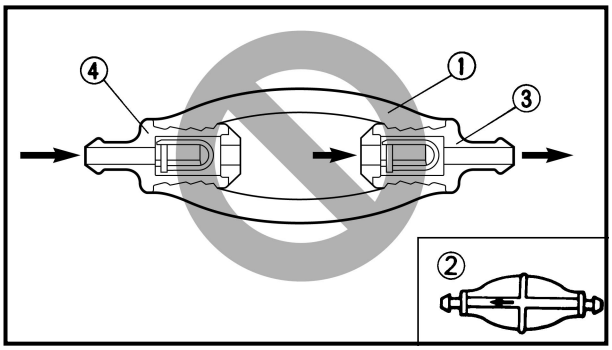

① Priming valve
② Arrow mark
③ Check valve (inlet)
④ Check valve (outlet)

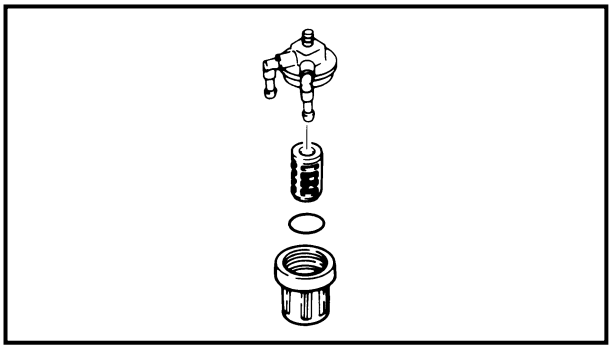

E21040-0

FUEL FILTER

1. After removing the nut and filter-cap, disassemble the fuel filter.
2. Visually inspect the filter body for cracks or damage to the thread and replace if required.

3. Using a soft brush and solvent, clean the filter element thoroughly. Inspect the filter element for breakage or distortion and replace if required.
4. Using a soft brush and solvent, clean the filter-cup thoroughly. Inspect the filter-cup for cracks or thread damage and replace if required.
5. Place the O-ring on the filter body, install the element and screw in the filter cup.

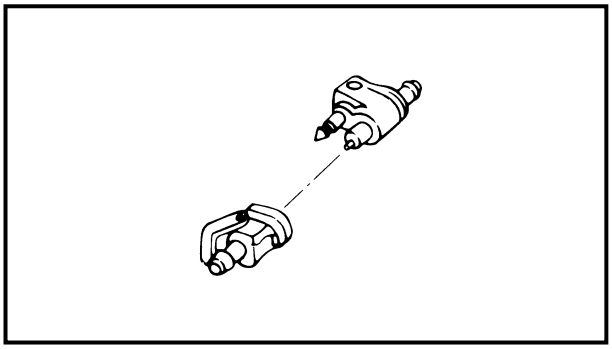

E21050-0

FUEL JOINTS

1. Inspect the fuel joints for leaks and cracks and replace as required.

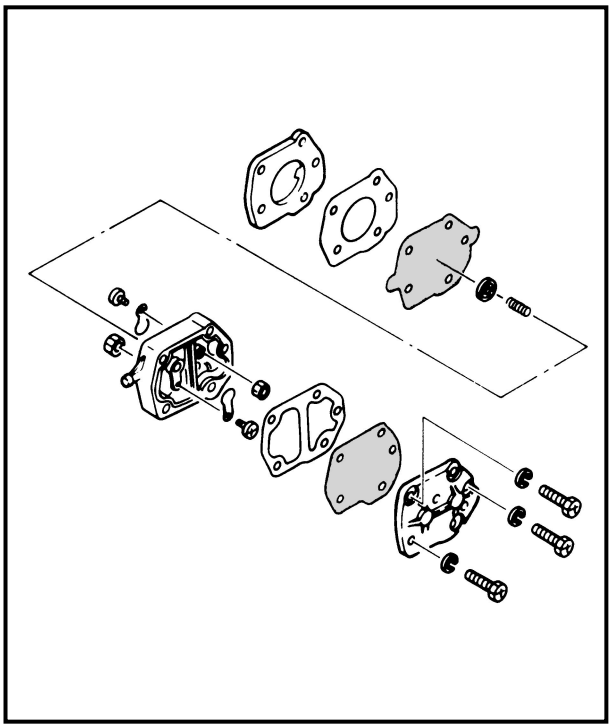

E21060-0

FUEL PUMP

1. Using a screwdriver, disassemble the fuel pump.
2. Visually inspect the pump body for cracks and replace if required.
3. Inspect the valves for cracks or distortion and replace if required.
4. Inspect the diaphragm for sign of damage, perforation or stretching and replace if required.
5. Assemble the fuel pump with new gaskets.

E22000-0

INSTALLATION

Referring to the diagram, install the fuel system.
Note the following points:
When connecting the fuel hoses to the fuel pump and fuel filter, follow the direction of flow indicated by the embossed arrows.
Place the clips in position, connect the hoses, and tighten the clips. Check for leaks.

E31001-1

CARBURETOR

EXPLODED DIAGRAM (Except for C60ER, C60TR, C75TR)

① Pilot screw
② Needle valve
③ Pilot jet
④ Main nozzle
⑤ Main jet
⑥ Float
⑦ Drain screw
⑧ Float chamber
⑨ Throttle stop screw
⑩ Collar
⑪ Electrothermal valve
⑫ Valve
⑬ Diaphragm

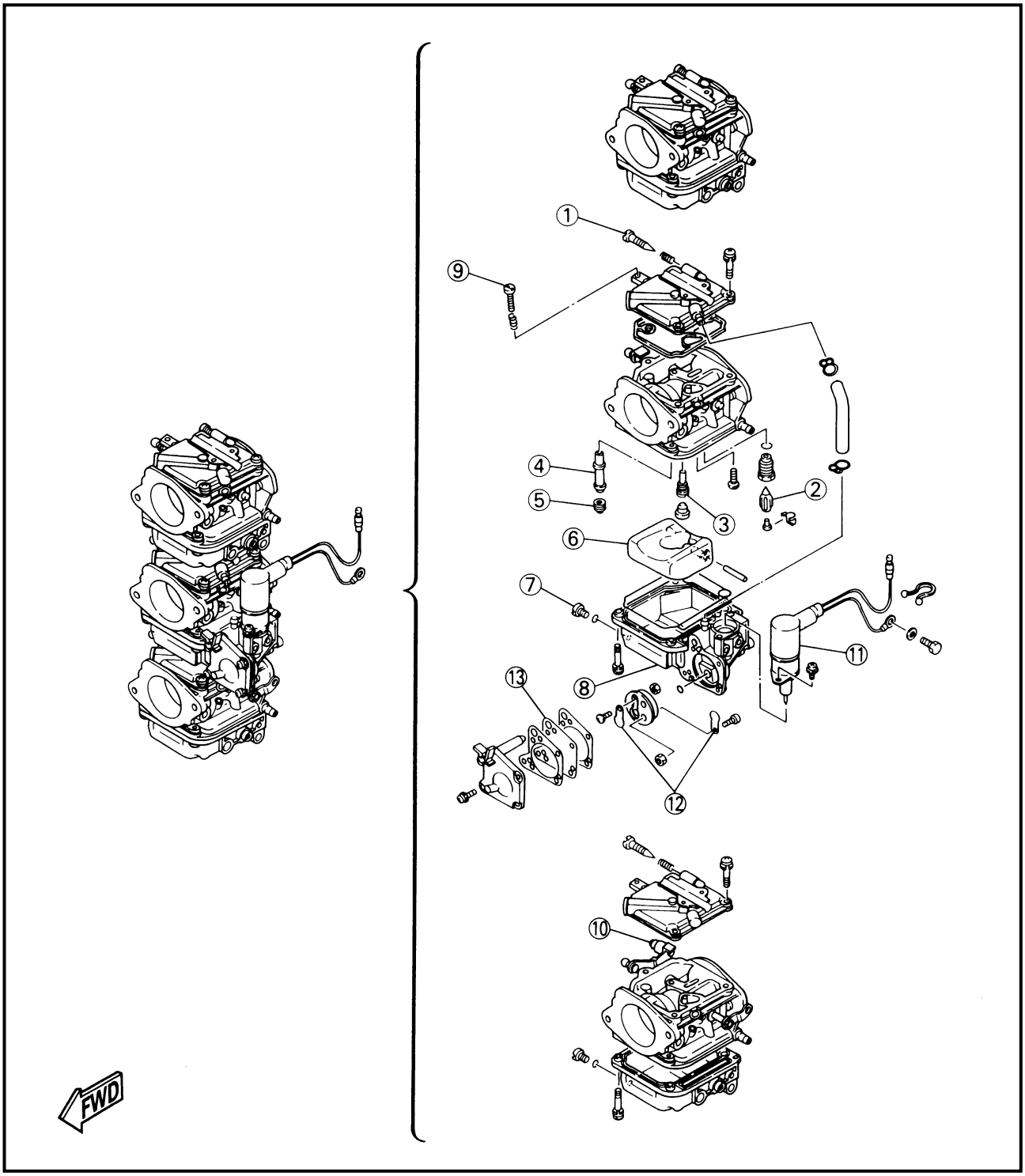

EXPLODED DIAGRAM (For C60ER, C60TR, C75TR)

① Pilot screw
② Needle valve
③ Pilot jet
④ Main nozzle
⑤ Main jet
⑥ Float
⑦ Drain screw
⑧ Float chamber
⑨ Throttle stop screw
⑩ Collar

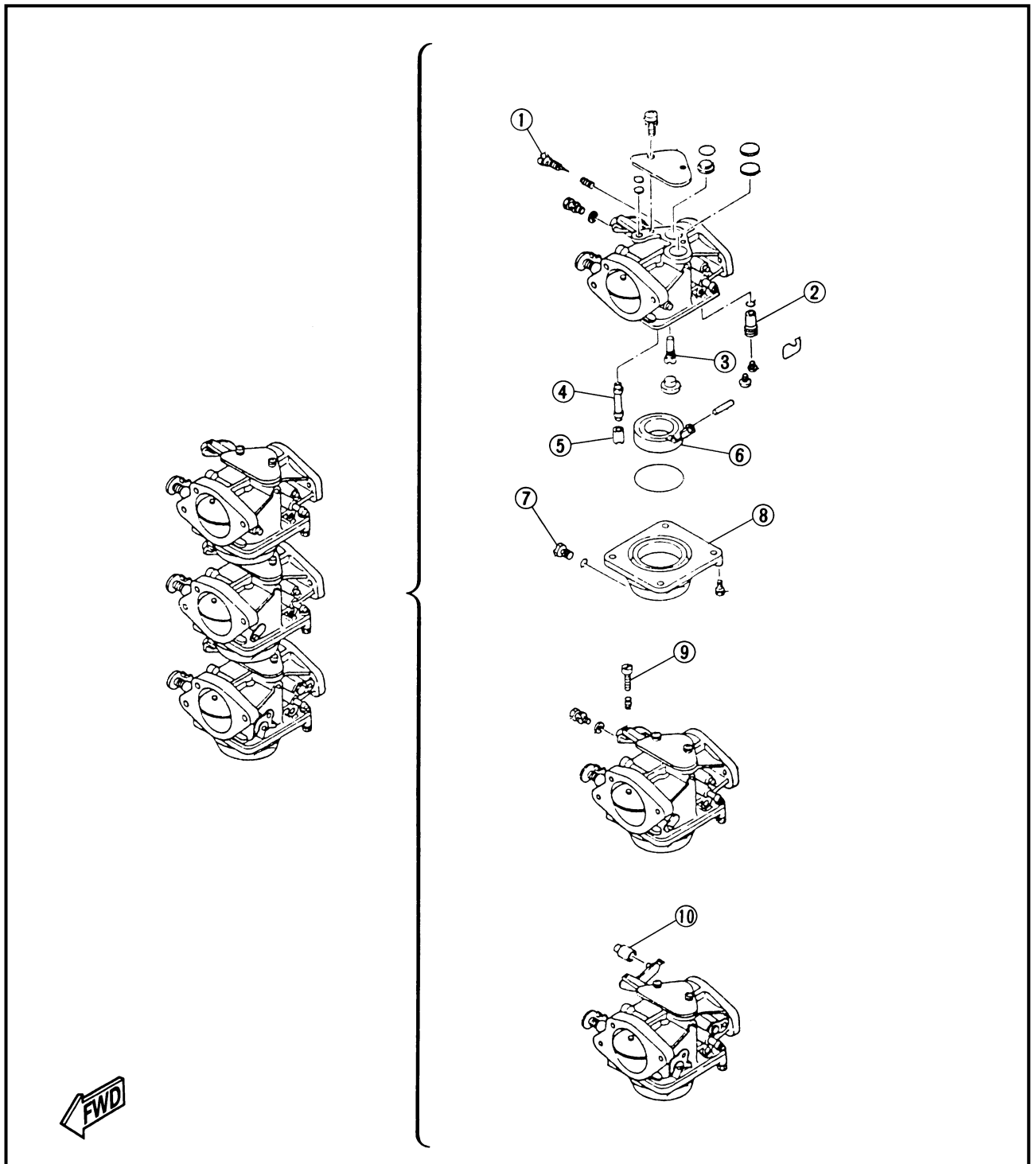

50, 60, 70 hp

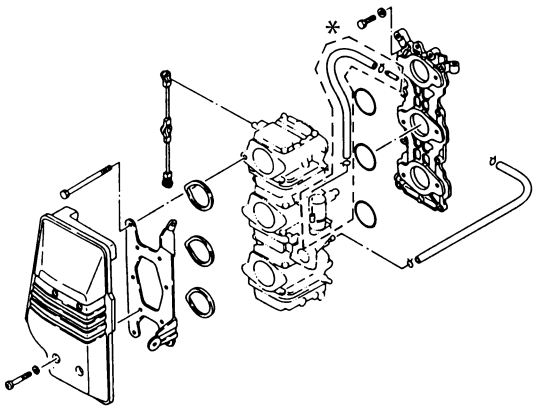

75, 80, 90 hp

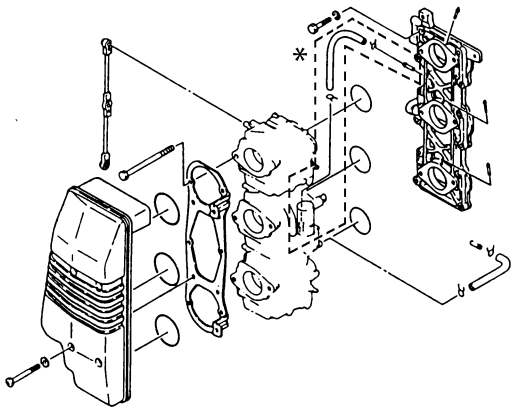

REMOVAL AND DISASSEMBLY

⚠ WARNING

At this step, ensure there is no spillage of gasoline on removing the connections.

1. Remove the silencer cover, disconnect the fuel hose, then remove the carburetor.

* Except for C60ER, C60TR, C75TR

2. Referring to the diagram, use a screwdriver to disassemble the carburetor.

3. Using solvent, clean the components thoroughly and blow-dry them with compressed air.

⚠ WARNING

Protect your eyes with suitable safety glasses or safety goggles when using compressed air. Protect your eyes and the eyes of others by directing the flow of compressed-air downward, noting that solvent and small parts may be blown off.

CAUTION:

Do not use steel wire for cleaning the jets as this may enlarge the jet diameters and seriously affect performance.

E32000-1*

INSPECTION

CARBURETOR BODY

1. Inspect the carburetor body for cracks or clogging of the passages.

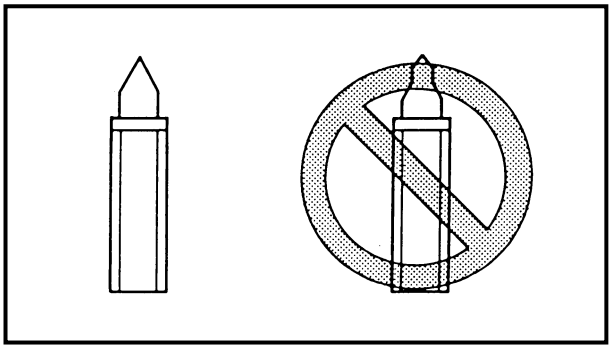

NEEDLE VALVE

1. Inspect the needle valve for free movement and wear and replace if required.

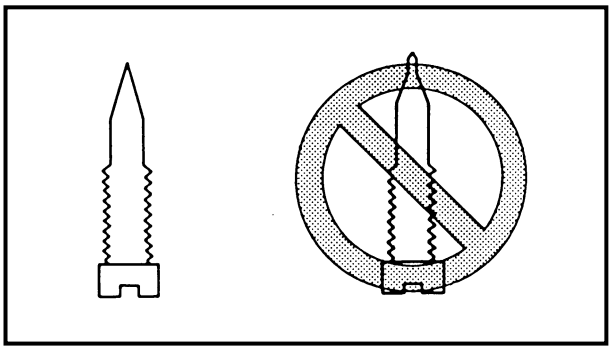

PILOT SCREW

1. Inspect the pilot screw for wear and replace if required.

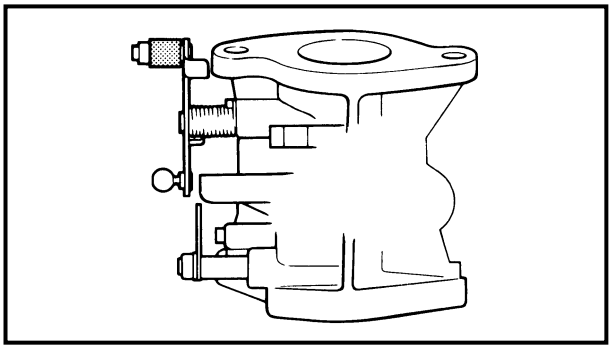

COLLAR

1. Inspect the collar at the end of the accelerator-arm for wear and replace if required.

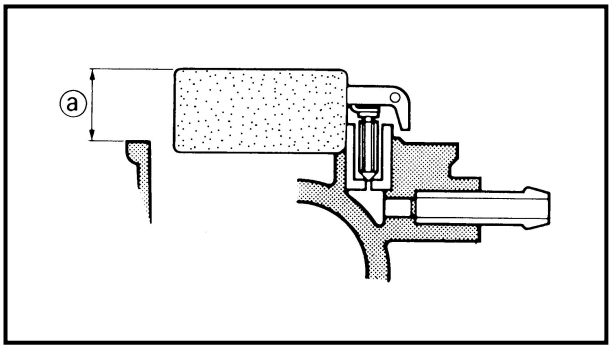

FLOAT

1. Visually inspect the float for damage or cracks and replace if required.
2. Measure the float height ⓐ. If it is more than 2 mm (0.08 in) greater or less than the specified float height, recheck the valve seat and needle-valve.

Float height ⓐ [Stamped mark]:
62F00:
15.0 ± 1.0 mm (0.59 ± 0.04 in)
6H20A, 6H30A, 6H007, 6H107:
14.0 ± 1.0 mm (0.55 ± 0.04 in)
6H210:
14.0 ± 2.0 mm (0.55 ± 0.08 in)
6H015:
19.5 ± 3.0 mm (0.77 ± 0.12 in)

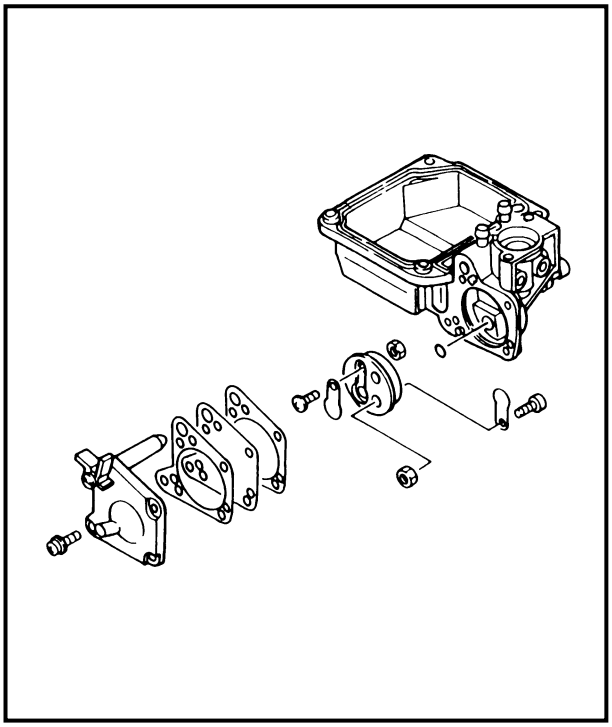

E21060-0

ENRICHING FUEL PUMP

1. Using a screwdriver, disassemble the fuel pump.
2. Visually inspect the pump body for cracks and replace if required.
3. Inspect the valves for cracks or distortion and replace if required.
4. Inspect the diaphragm for any sign of damage, perforation or stretching and replace if required.

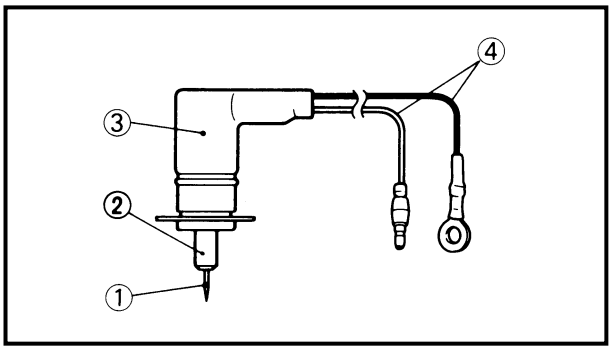

ELECTROTHERMAL VALVE

1. Inspect the needle valve for any bending and wear, and the piston valve for flow.
   Inspect the body for cracks and the wire lead for defects.

① Needle valve
② Piston valve
③ Body
④ Wire lead

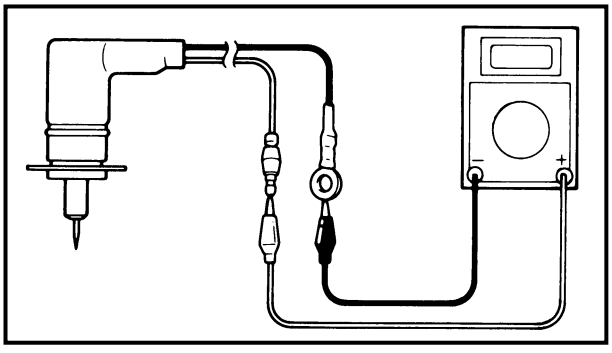

2. Measure the resistance of the electrothermal valve.

Electrothermal valve resistance:
Blue – Black
2.3 ~ 3.5 Ω at 20˚C (68˚F)

NOTE:
When measuring the resistance of 10 Ω or less using the digital tester, the correct measurement cannot be obtained. Refer to "Lower resistance measurement" (page 8-15).

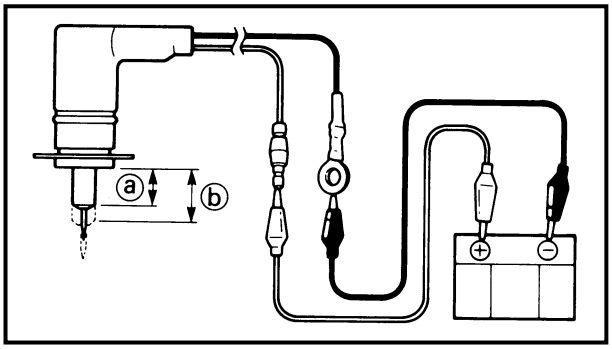

3. Check the piston valve height.
   If the piston valve height is not different from ⓐ to ⓑ, replace the electrothermal valve.
   a) Measure the piston valve height ⓐ.
   b) Connect the wire leads to a 12V battery.
   c) Measure the piston valve height ⓑ after several minutes.
   d) Compare the valve height ⓐ with ⓑ.

ASSEMBLY

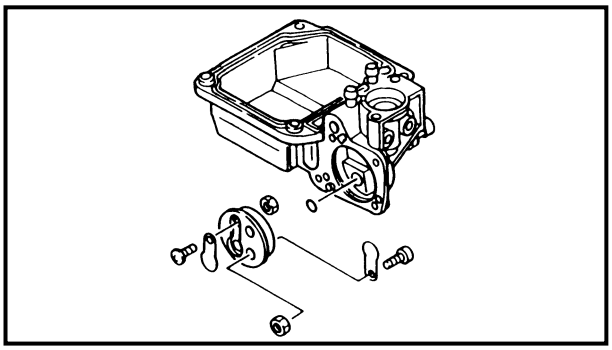

1. Install a new O-ring, the valves on the body and secure with the screws.

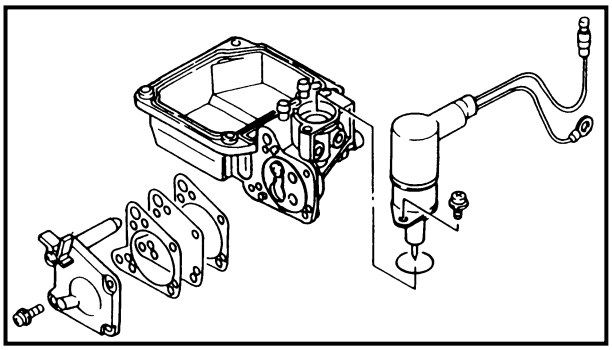

2. Install the diaphragm on the carburetor with new gaskets, install the pump cover on the carburetor and secure with the screws.
3. Install a new O-ring to the electrothermal valve, install it to the carburetor with the plate and secure with the screws.

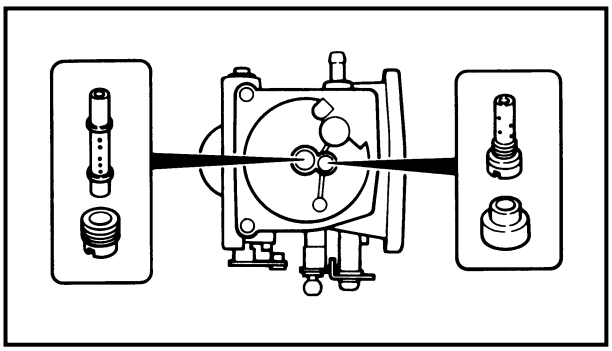

4. Insert the main nozzle fully and screw in the main jet until tight.
5. Screw in the pilot jet fully and install the cap.

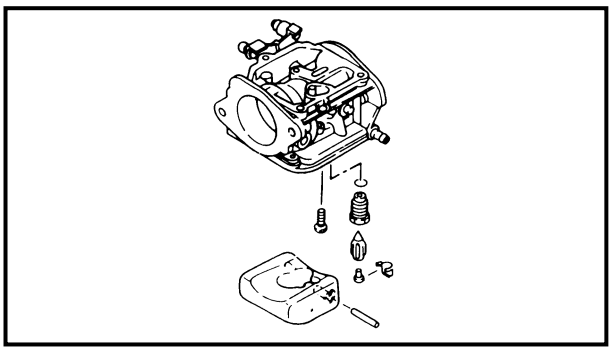

6. Install the needle-valve on the float, attach the float to the carburetor body with the float-pin and tighten the screw.

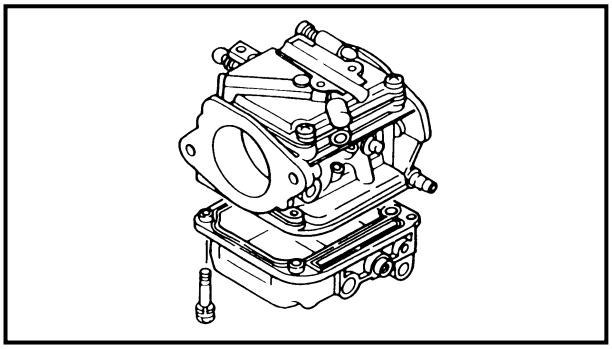

7. Install a new O-ring to the float-chamber, install it to the carburetor body and secure with the screws.

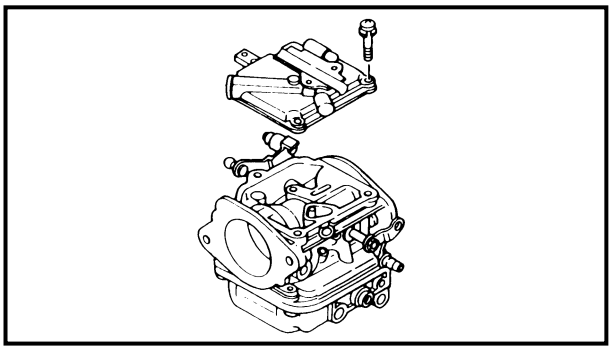

8. Install the plate with new packing and secure with the screws.

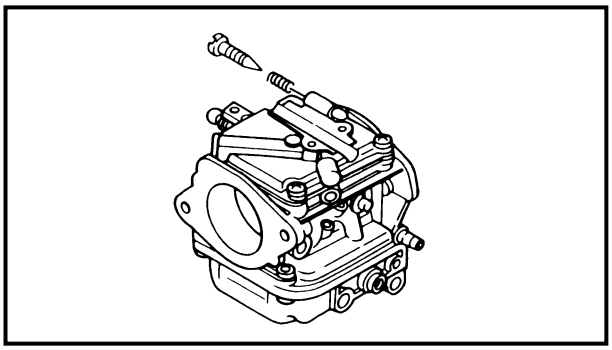

9. Install the pilot-screw with its spring, screw it in until seated then screw it out the specified number of turns.

CAUTION:

Do not cause damage to the tip of the pilot screw by over-tightening it.

Pilot screw [stamped mark]:
62F00, 6H210, 6H007, 6H015:
1-3/8 ± 1/4 turns out
6H20A: 1-1/2 ± 1/4 turns out
6H30A, 6H107:
1-1/4 ± 1/4 turns out

50, 60, 70 hp

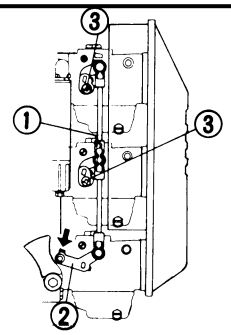

75, 80, 90 hp

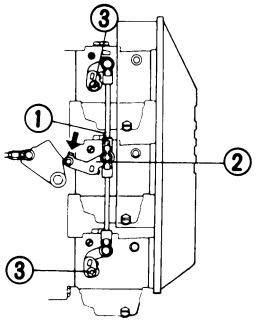

E34004-1

INSTALLATION

1. Install the carburetors and plate with new gaskets.

① Idle adjust screw
② Throttle lever
③ Throttle lever securing screw

2. Connect the fuel hoses to the carburetors and fit the hose-clips over the recesses to ensure leak-proof connections.
3. Connect the electrothermal valve leads.
4. Connect the oil-pump link-rod to the carburetor and oil-injection pump.
5. Install the silencer cover and tighten the bolt to the specified torque.

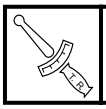	**Bolt (silencer cover):** **2 Nm (0.2 m • kg, 1.4 ft • lb)**

OIL-INJECTION SYSTEM (Oil injection model)

EXPLODED DIAGRAM

① Oil level sensor
② Oil strainer
③ Strainer cover gasket
④ Oil injection pump assembly
⑤ Check valve
⑥ Oil tank
⑦ Special washer
⑧ Oil tank cap assembly
⑨ Hook
⑩ Filler tube

50, 60, 70 hp

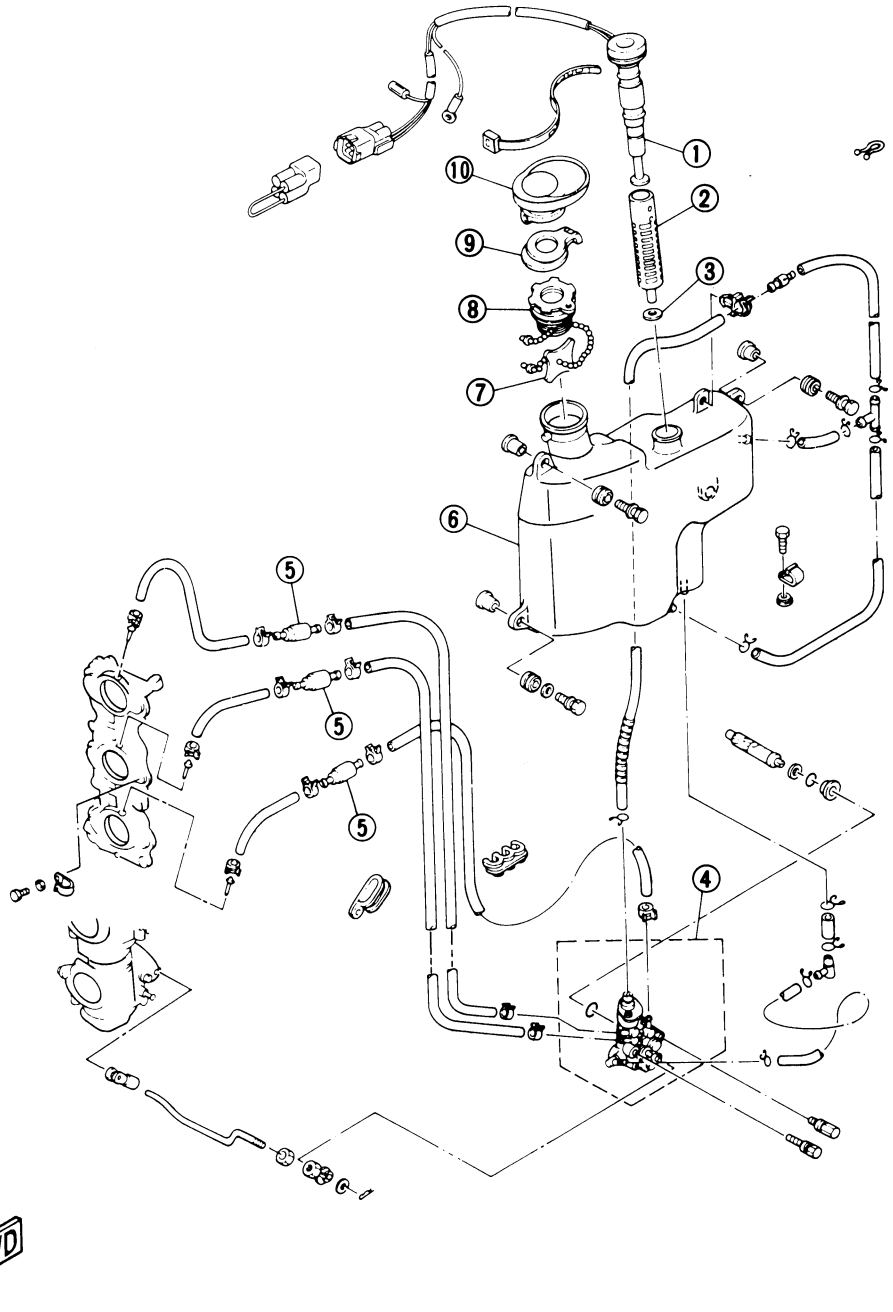

① Check valve
② Oil injection pump assembly
③ Drain screw
④ Oil tank
⑤ Strainer cover gasket
⑥ Oil strainer
⑦ Oil lever sensor
⑧ Special washer
⑨ Oil tank cap assembly
⑩ Hook
⑪ Filler tube

75, 80, 90 hp

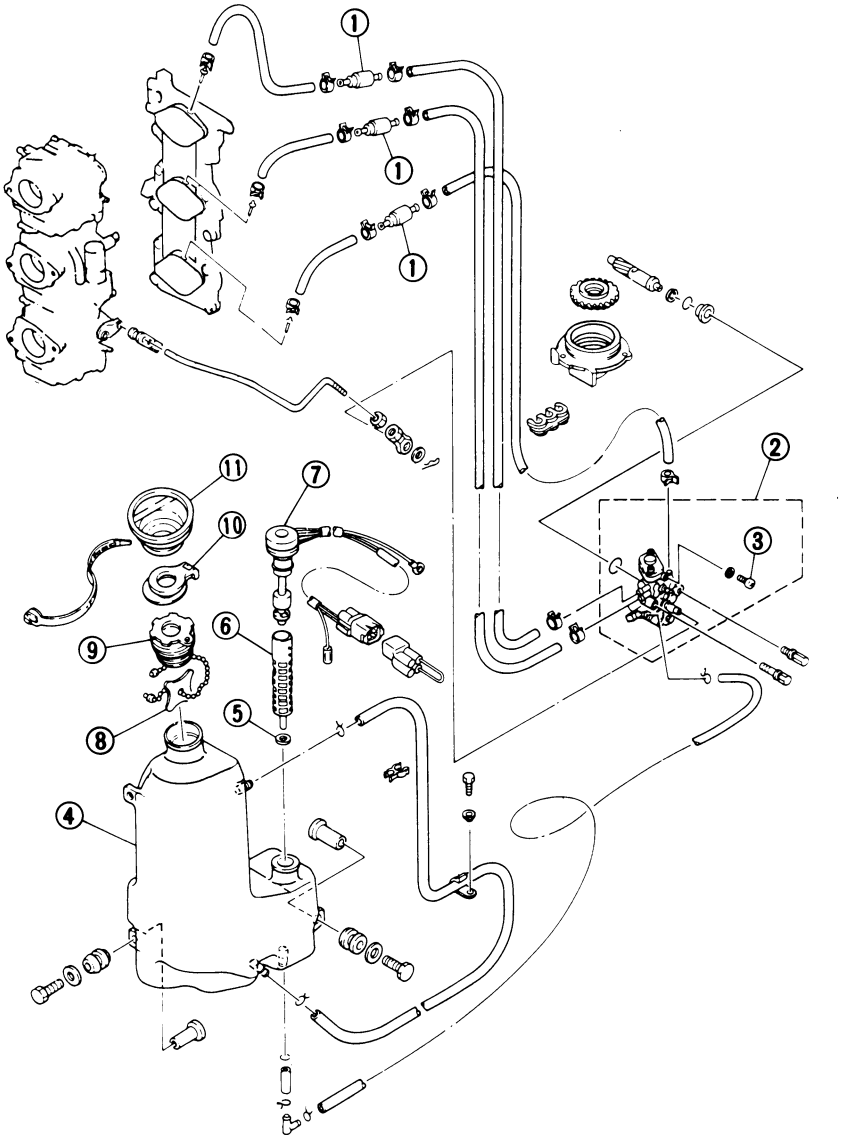

REMOVAL

1. Drain the oil from the oil-tank and remove the carburetor.
2. Disconnect the hoses and remove the oil-injection system.

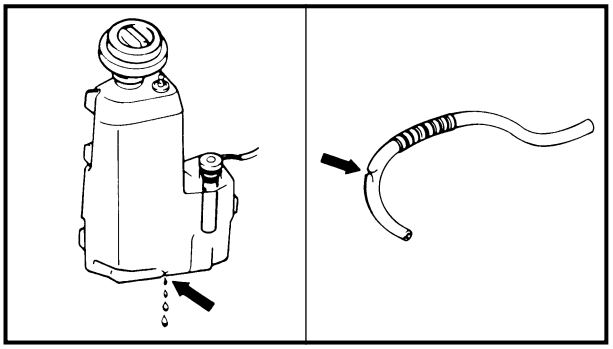

E42001-0*

CLEANING AND INSPECTION

OIL-TANK

1. Using solvent, clean the oil-tank.
2. Drain the solvent and dry the tank.
3. Inspect the oil-tank for cracks and replace it if required.

OIL-LEVER SENSOR

Refer to "OIL-LEVEL SENSOR" section in chapter 8.

OIL-HOSES

1. Inspect the oil-hoses for damage or cracks and replace them if required.

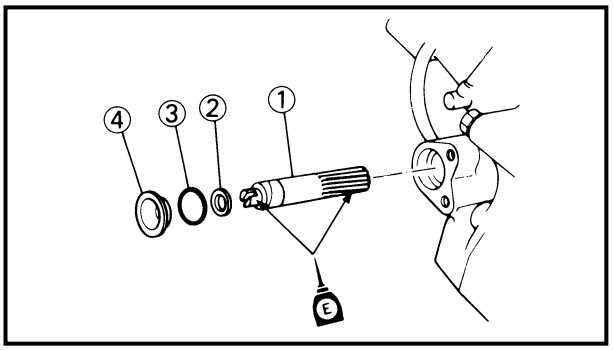

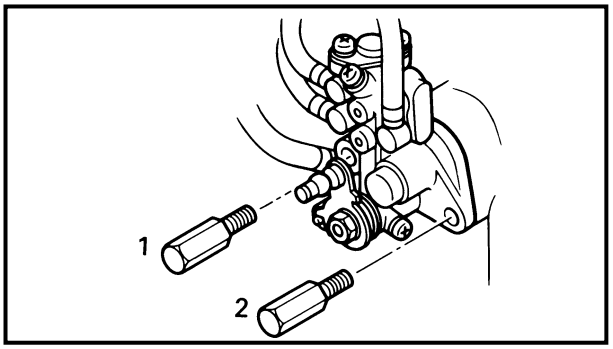

E43001-0*

INSTALLATION

1. Connect the oil-hoses to the oil-pump and tighten the clips on the hoses.
2. Install the driven gear.

① Driven gear
② Washer
③ O-ring
④ Distance collar

3. Install the oil-pump to the power-head.

NOTE:

Tighten the bolts to the specified torque in sequence.

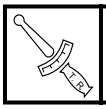	**Oil injection pump mounting bolt: 7 Nm (0.7 m • kg, 5.1 ft • lb)**

4. Assemble the oil-tank and install it.
5. Connect the oil delivery-hoses to the intake manifolds and tighten the clips on the hoses.
6. Lead the wire of the oil-level sensor to the port side of the engine and connect the cores.
7. Bleed the air from the lines.

CAUTION:

After reinstalling the oil injection pump, be sure to bleed the pump.

CHAPTER 5
POWER UNIT

EXPLODED DIAGRAM 5-1

PREPARATION FOR OVERHAUL 5-3

REMOVAL 5-3

DISASSEMBLY 5-5

INSPECTION 5-6
- CYLINDER HEAD 5-6
  - CLEANING 5-6
  - INSPECTION 5-6
- CYLINDER BLOCK 5-7
  - CLEANING 5-7
  - INSPECTION 5-7
- PISTON 5-8
  - CLEANING 5-8
  - INSPECTION 5-8
- PISTON RING 5-9
  - INSPECTION 5-9
- PISTON PIN AND SMALL END BEARING 5-10
  - CLEANING 5-10
  - INSPECTION 5-10
- CRANKSHAFT 5-10
  - INSPECTION 5-10
- REED VALVE 5-11
  - INSPECTION 5-11
- THERMOSTAT 5-12
  - CLEANING 5-12
  - INSPECTION 5-12
- CRANK MAIN BEARING 5-12
  - CLEANING 5-12
  - INSPECTION 5-12
- DRIVE GEAR (OIL INJECTION PUMP DRIVE) 5-13
  - INSPECTION 5-13
- DRIVEN GEAR (OIL INJECTION PUMP DRIVE) 5-13
  - INSPECTION 5-13

ASSEMBLY AND ADJUSTMENT 5-14
BEARING, OIL SEAL AND O-RING 5-14
PISTON AND PISTON RING 5-14
SMALL END BEARINGS AND PISTON ASSEMBLY 5-15
CONNECTING ROD BIG END BEARING ASSEMBLY (75, 80, 90 hp) 5-16
OIL SEAL HOUSING 5-17
CRANK CYLINDER ASSEMBLY (50, 60, 70 hp) 5-17
CRANK CYLINDER ASSEMBLY (75, 80, 90 hp) 5-18
CYLINDER HEAD AND EXHAUST COVER 5-19
DRAINAGE HOSE 5-20
INTAKE MANIFOLD 5-20
FUEL SYSTEM AND ELECTRICAL SYSTEM 5-20

INSTALLATION 5-21

G20000-0

EXPLODED DIAGRAM

① Cylinder head cover
② Head cover gasket
③ Cylinder head
④ Cylinder head gasket
⑤ Thermostat
⑥ Thermostat cover
⑦ Exhaust cover gasket
⑧ Exhaust inner cover
⑨ Exhaust outer cover
⑩ Piston pin clip
⑪ Piston pin
⑫ Drive gear
⑬ Bearing
⑭ Oil seal
⑮ O-ring
⑯ Oil seal housing
⑰ Intake manifold
⑱ Valve seat packing
⑲ Reed valve plate
⑳ Reed valve assembly

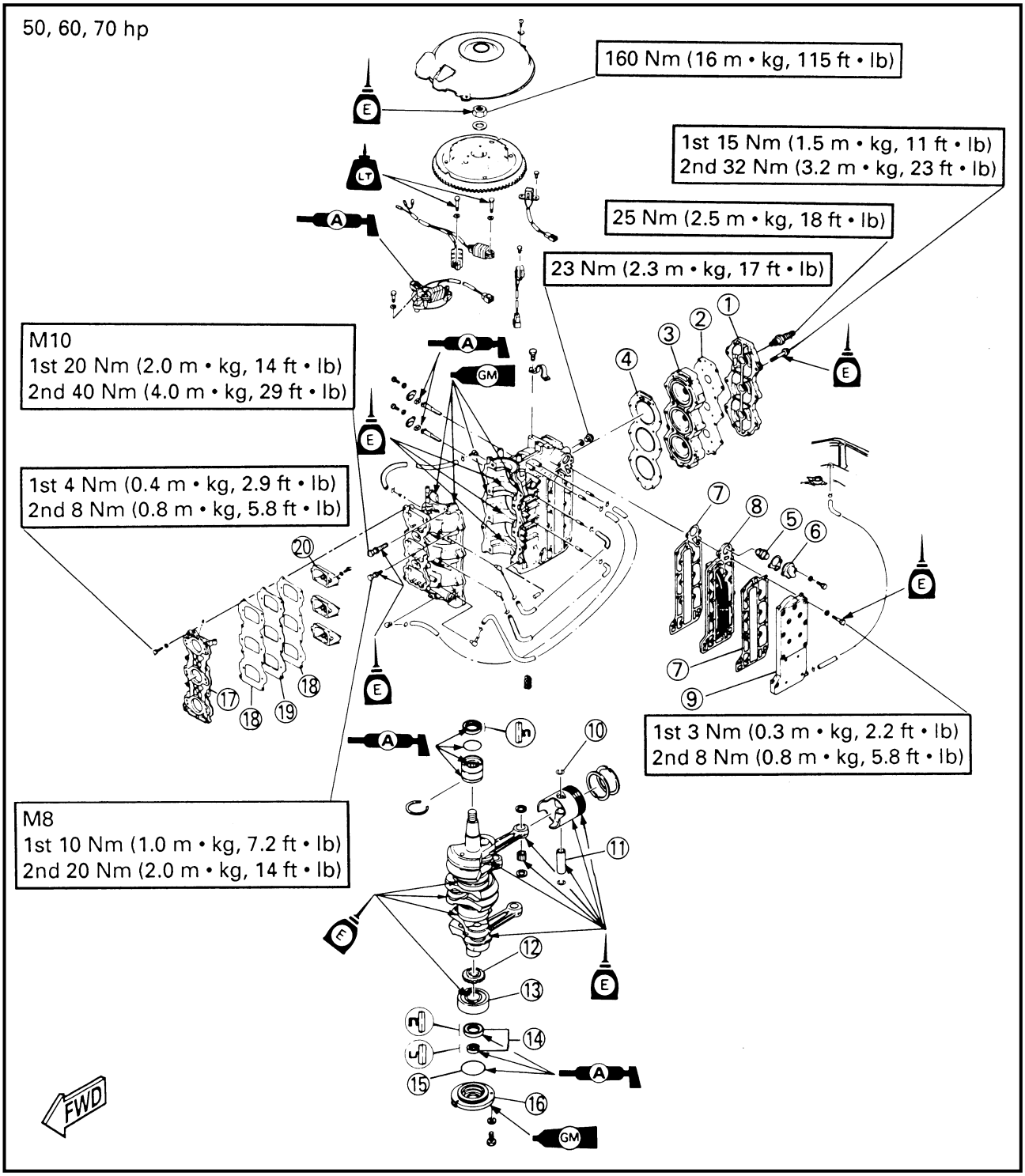

EXPLODED DIAGRAM

① Thermostat cover
② Thermostat
③ Thermo sensor
④ Cylinder head cover
⑤ Head cover gasket
⑥ Cylinder head
⑦ Cylinder head gasket
⑧ Exhaust cover gasket
⑨ Exhaust inner cover
⑩ Exhaust outer cover
⑪ Piston pin clip
⑫ Piston pin
⑬ Bearing
⑭ Drive gear
⑮ Circlip
⑯ Oil seal
⑰ O-ring
⑱ Oil seal housing
⑲ Intake manifold
⑳ Valve seat packing
㉑ Reed valve plate
㉒ Reed valve assembly

*B90TR/90AETO

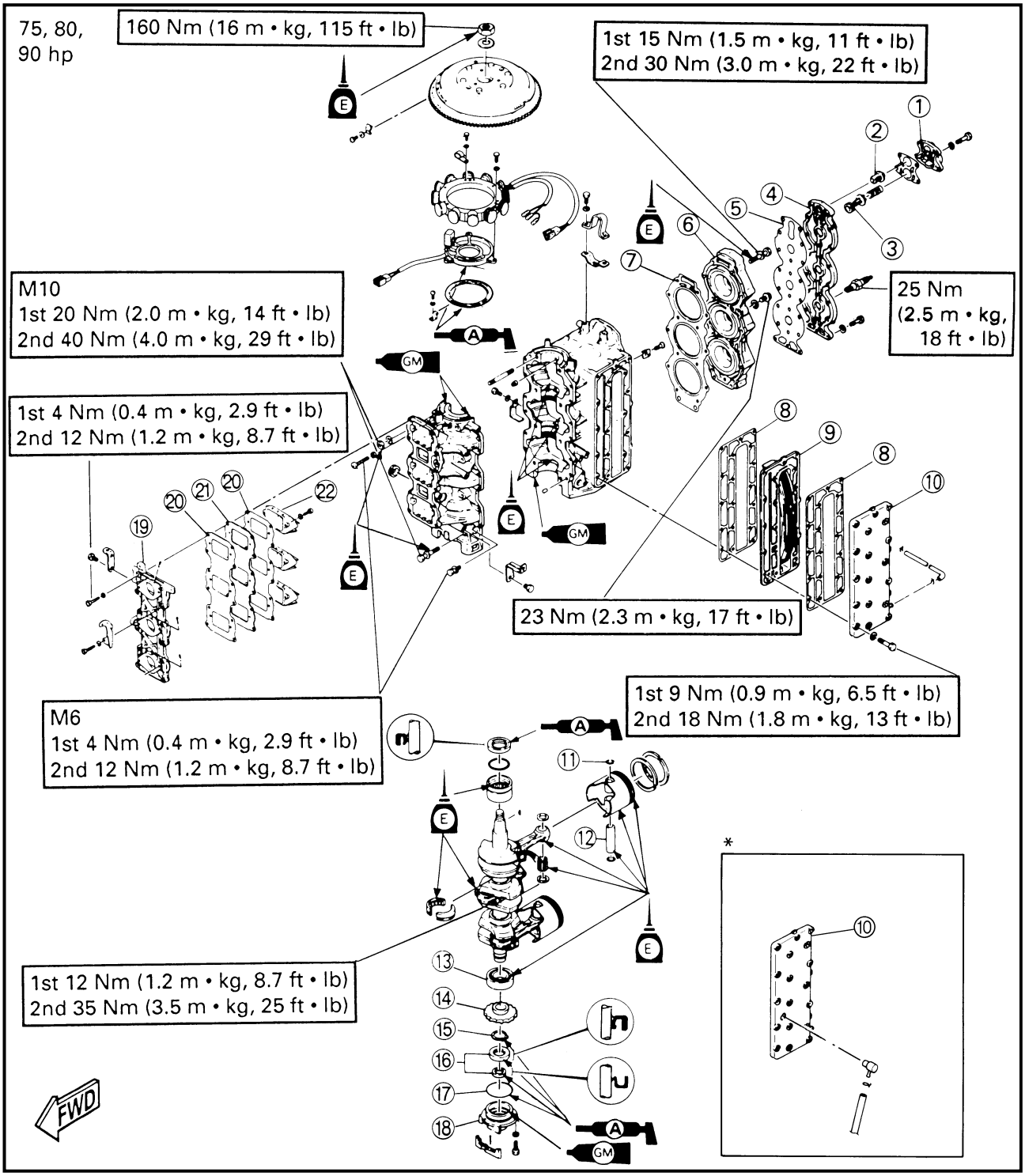

G30000-0

PREPARATION FOR OVERHAUL

1. Clean all dirt, mud, dust and foreign material from the engine before the engine is removed and disassembled.
2. To ensure that you can perform the work cleanly and efficiently, check that you have the proper tools and cleaning equipment before commencing engine removal and disassembly.
3. During engine disassembly, as parts are disassembled, clean them and place them in trays in their order of disassembly. This will speed up assembly and help ensure that all parts are correctly reinstalled.

NOTE:

When disassembling the engine, keep mated parts together, e.g., cylinder and piston and other parts that have been 'mated' through normal wear. Mated sets should be re-used on reassembly or replaced completely.

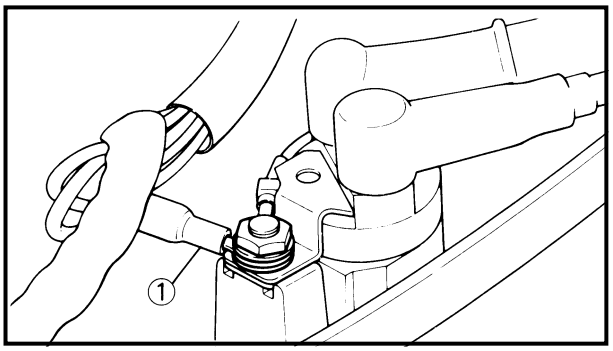

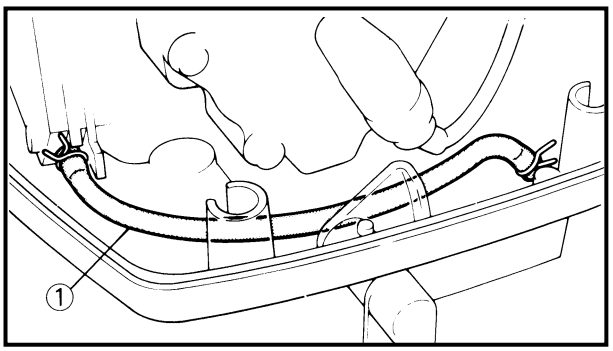

G40003-0*

REMOVAL

1. Remove the electrical system parts.
   Refer to "ELECTRICAL COMPONENTS" section in chapter 8.

① Ground lead from the cylinder head cover
Battery cable
Power trim and tilt motor leads
(PTT model)
Power trim and tilt relay (PTT model)
Oil level sensor lead (oil injection model)

2. Remove the fuel system parts and hose.
   Refer to "FUEL SYSTEM" section in chapter 4.

① Cooling water pilot hose
Fuel hose on the strainer

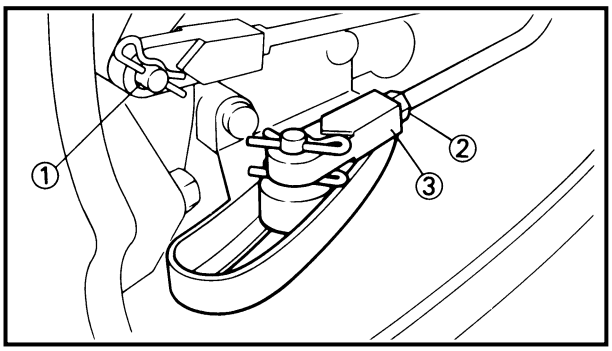

3. Remove the throttle cable and the shift mechanism.

① Throttle cable joint by removing the hair pin
② Shift rod bracket bolt
③ Shift cable joint and bushing by removing the hair pin

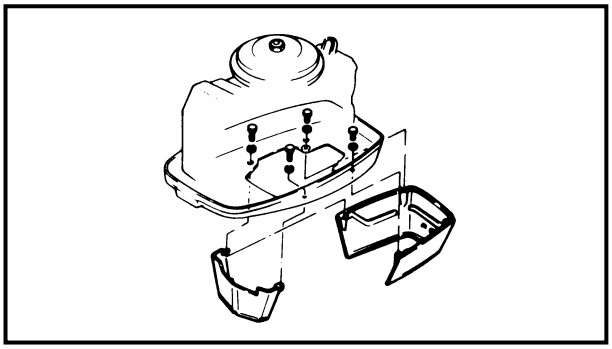

4. Remove the front and rear aprons.

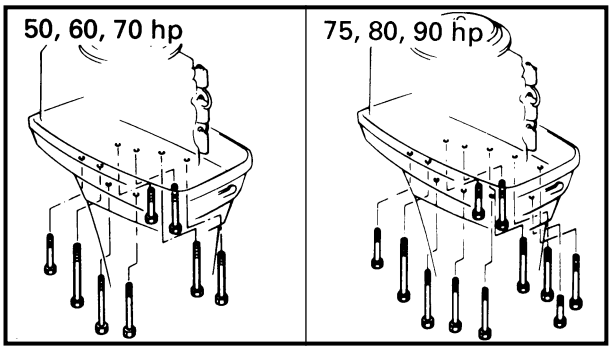

5. Remove the power head installation bolts, and then remove the power head from the upper casing.
   50, 60, 70 hp ..... 8 bolts
   75, 80, 90 hp ..... 11 bolts

NOTE:
The power head may be difficult to separate from the bottom cowling because of a stuck gasket holding them together. If this is the case, lever it off the bottom cowling with a piece of wood. Use care not to damage the bottom cowling or power head with the wood.

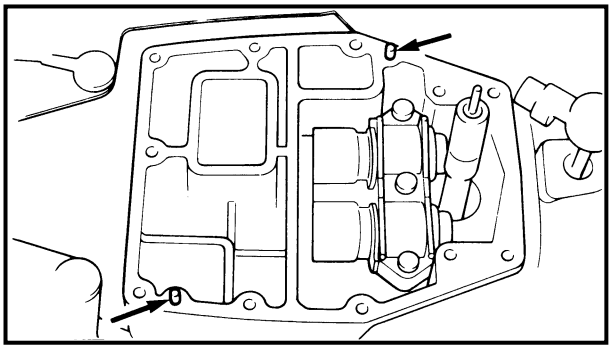

6. Remove the dowel pins from the bottom cowling or power head. To protect the dowel pins against damage, cover them with rags.

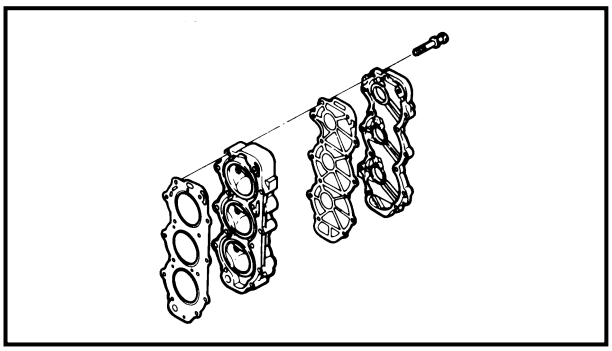

G50003-0

DISASSEMBLY

Referring to the exploded diagram, remove the following parts.

1. Cylinder head

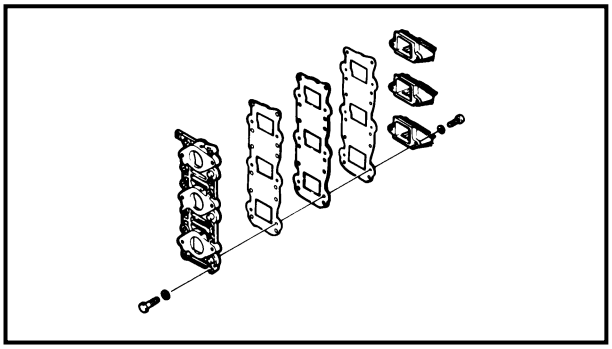

2. Intake manifold

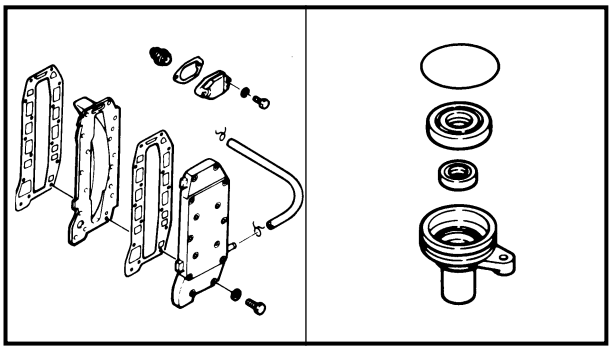

3. Exhaust cover and thermostat cover.
4. Oil seal housing
   Using the oil seal remover, remove the oil seal one by one from the housing.

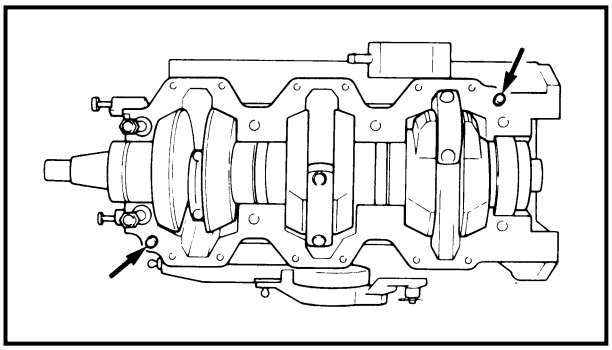

5. Crankcase
   Remove the two dowel pins.
6. Crankshaft and connecting rod. (50, 60, 70 hp)
7. Connecting rod caps, needle bearings and crankshaft. (75, 80, 90 hp)

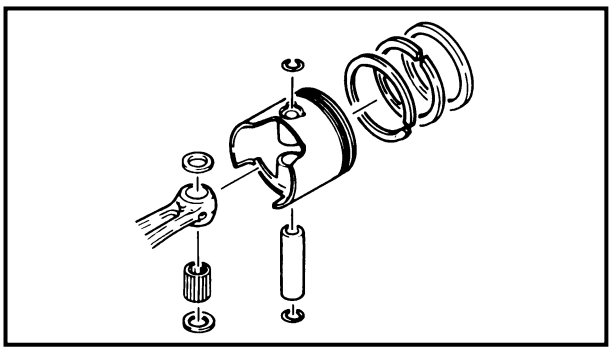

8. Piston and piston pin
9. Piston rings

Note the following points:

1. When disassembling the piston and piston pin, place a tray under the connecting rod to catch the needle bearings.
2. Only carry out exchange of the crankshaft bearing if the bearing is malfunctioning.

G61000-0*

INSPECTION

CYLINDER HEAD

CLEANING

1. Using a gasket scraper, remove all traces of gasket material from the cylinder head.

2. Using a round scraper, remove carbon deposits from the combustion chamber.

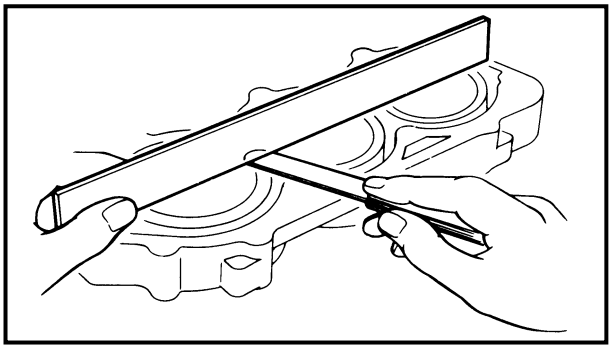

CAUTION:

Do not scratch the surfaces of the cylinder and combustion chamber.

3. Using a soft brush, clean the water jacket.

INSPECTION

1. Using a precision straight-edge and thickness gauge, measure the surface contacting the cylinder block for warping.

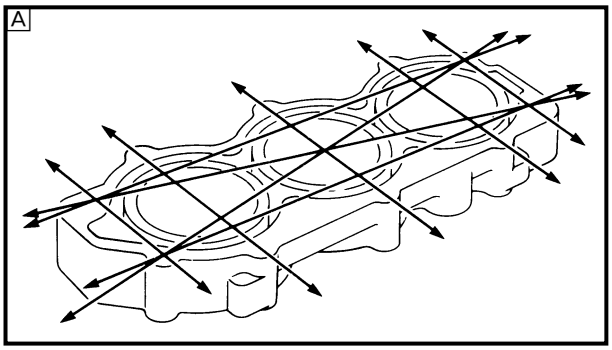

Warpage limit:
0.1 mm (0.004 in)

A Lines indicate straight-line measurement

If the degree of warping exceeds this specification, re-surface the cylinder-head as follows:
Place 400-600 grit wet-or-dry paper on the surface-plate, and resurface the cylinder-head using a figure-eight sanding pattern.

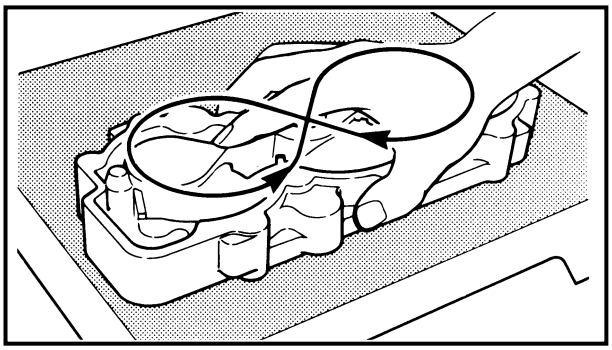

G61501-0*

CYLINDER BLOCK

CLEANING

1. Using a gasket-scraper, remove all traces of gasket material from the cylinder-block surface.
2. Using a soft brush and solvent, clean the cylinder-block.

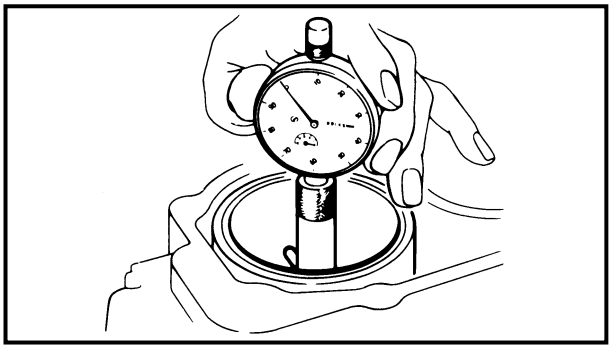

INSPECTION

1. Visually inspect the cylinder sleeves for cracks and scratches.
   If cracks are found, replace the cylinder block.
   If scratches are found, check the degree of out-of-round, and then hone the cylinder or re-bore it if necessary.

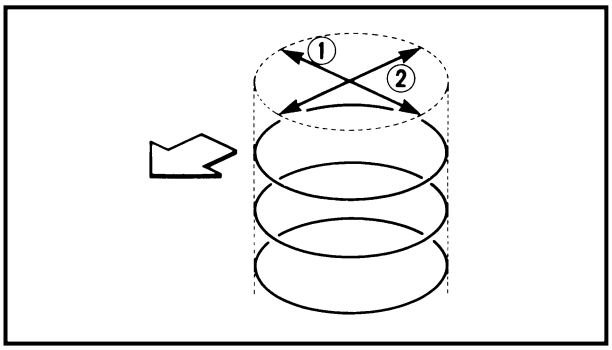

2. Using a cylinder-gauge, measure the cylinder bore at three positions in the thrust and axial directions.

① Axial direction
② Thrust direction

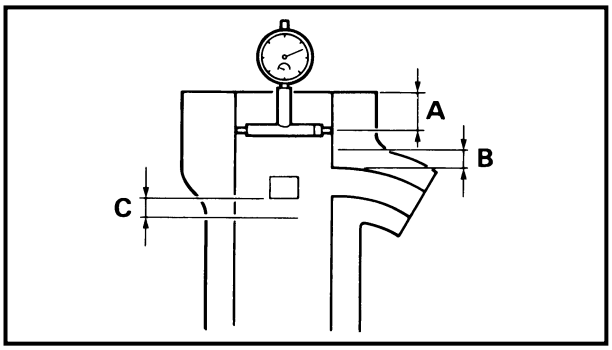

A: 10 mm (0.4 in) below the cylinder top
B: 5 mm (0.2 in) above the exhaust port
C: 5 mm (0.2 in) below the scavenging port

NOTE:

Do not place the cylinder-gauge on the port hole.

Cylinder bore size;
50, 60, 70 hp: 72.00 ~ 72.02 mm (2.834 ~ 2.835 in)
75, 80, 90 hp: 82.00 ~ 82.02 mm (3.228 ~ 3.229 in)
Taper limit:
0.08 mm (0.003 in)
Out of round limit:
0.05 mm (0.002 in)

If diameter is greater than the limit, hone or rebore the cylinder or, if necessary, replace the cylinder-block.

G62001-0*

PISTON

CLEANING

1. Using a gasket-scraper, remove the carbon from the piston top.
2. Using a broken ring, clean the ring grooves.
3. Using a soft brush and solvent, thoroughly clean the piston. If necessary, use 600 ~ 800 grit wet-or-dry sandpaper to remove score marks or varnish.

INSPECTION

1. Using a micrometer, measure the piston diameter at right angles to the piston-pin center line, 10 mm (0.4 in) above the bottom edge.

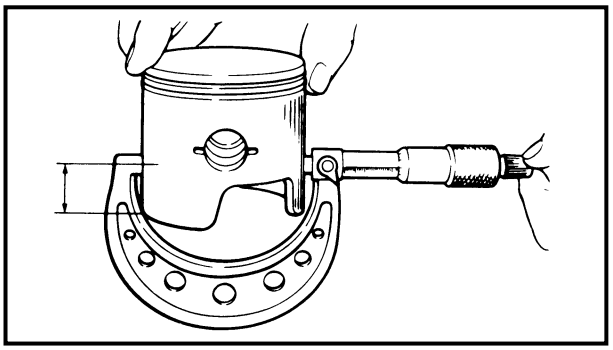

Piston diameter:
Standard:
50, 60, 70 hp: 71.945 ~ 71.970 mm (2.8325 ~ 2.8335 in)
75, 80, 90 hp: 81.935 ~ 81.960 mm (3.2258 ~ 3.2268 in)

2. Using the measured cylinder bore diameter in thrust directions, subtract the piston diameter measurement from the cylinder bore diameter measurement.

Piston clearance:
50, 60, 70 hp: 0.050 ~ 0.055 mm (0.0020 ~ 0.0022 in)
75, 80, 90 hp: 0.060 ~ 0.065 mm (0.0024 ~ 0.0026 in)

If this clearance is not within the specifications, replace the piston with standard or oversize and/or rebore the cylinder.

Oversize piston:
50, 60, 70 hp:
***1st 72.25 mm (2.844 in)**
2nd 72.50 mm (2.854 in)
75, 80, 90 hp:
***1st 82.25 mm (3.238 in)**
2nd 82.50 mm (3.248 in)

* Except for USA

G62501-0*

PISTON RING

INSPECTION

1. Using a thickness gauge, measure the clearance between the piston ring and the groove land.

Side clearance:
50, 60, 70 hp:
Top/2nd ring:
0.03 ~ 0.07 mm
(0.0012 ~ 0.0028 in)
75, 80, 90 hp:
Top/2nd ring:
0.03 ~ 0.06 mm
(0.0012 ~ 0.0024 in)

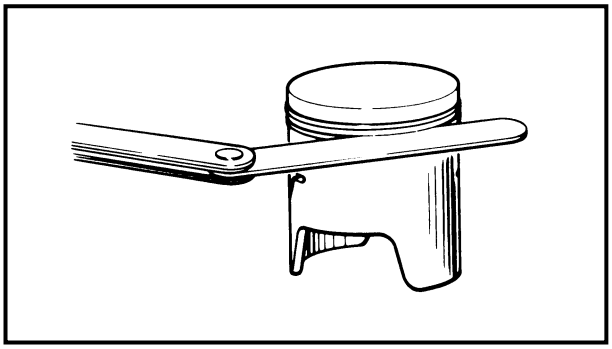

If the clearance is not within the specifications, replace the piston.

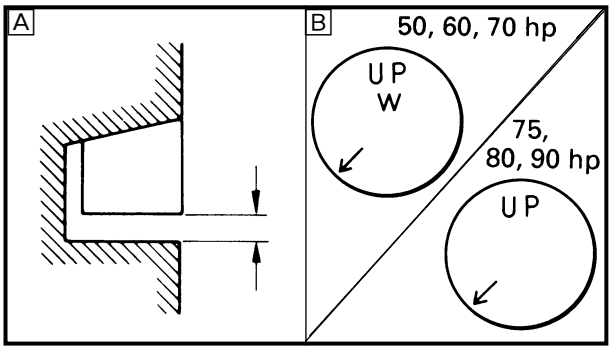

A Top/2nd: Keystone type
B Piston marked with "W" (50, 60, 70 hp)

2. Insert the piston ring into the cylinder. Using a piston, push the piston ring a little beyond the bottom of the ring travel to a depth of 20 mm (0.8 in) from the top of the cylinder block.

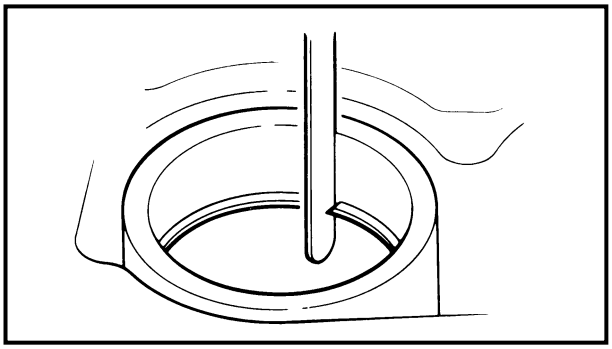

CAUTION:

Take care not to scratch the piston. Using a thickness gauge, measure the end-gap.

Ring end gap (installed):
50, 60, 70 hp:
0.3 ~ 0.5 mm (0.012 ~ 0.020 in)
75, 80, 90 hp:
0.4 ~ 0.6 mm (0.016 ~ 0.024 in)

If the clearance is not within the specifications, replace the piston-ring.

NOTE:

If the clearance is greater than maximum, even with a new piston ring, rebore the cylinder and use an over-size piston and piston-ring.

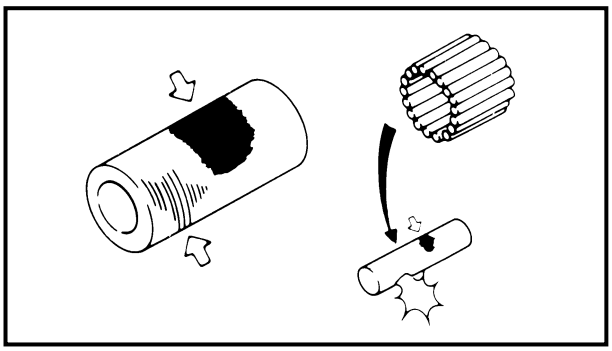

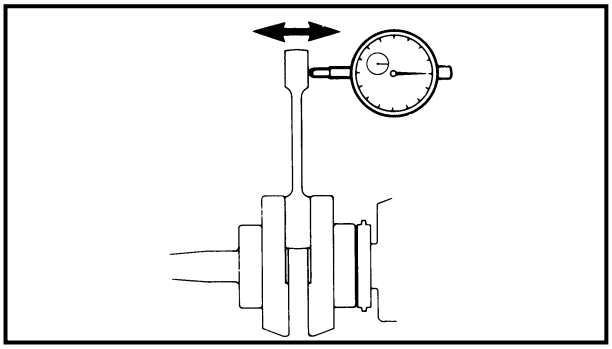

G63000-0

PISTON PIN AND SMALL END BEARING

CLEANING

1. Use a soft brush and solvent to clean the parts.

INSPECTION

1. Visually inspect for surface defects, breakage, scratches and pitting. If it is decided to replace the small end bearings, replace them all.

G63500-0*

CRANKSHAFT

INSPECTION

1. Place the crankshaft on a crankshaft-aligner or on V-blocks.
2. Using a dial gauge, measure the connecting-rod axial play.

Maximum axial play:
2.0 mm (0.08 in)

If this axial play is greater than the maximum axial play, replace the crankshaft assembly.

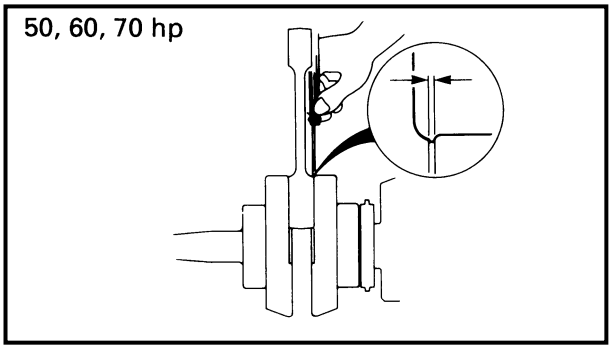

3. Using feeler gauges, measure the connecting-rod side clearance.
(50, 60, 70 hp)

Connecting-rod side clearance:
50, 60, 70 hp:
0.2 ~ 0.7 mm (0.008 ~ 0.028 in)
75, 80, 90 hp:
0.12 ~ 0.26 mm (0.005 ~ 0.010 in)

If this side clearance exceeds the specification, replace the crankshaft assembly.

50, 60, 70 hp

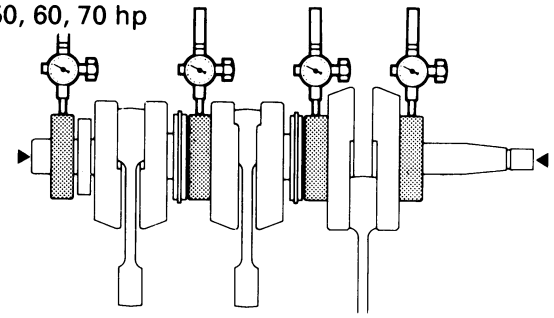

75, 80, 90 hp

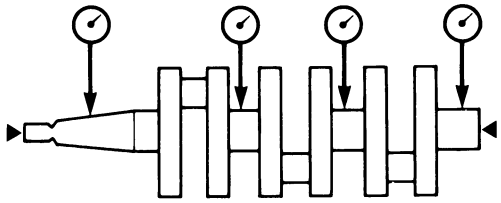

50, 60 hp

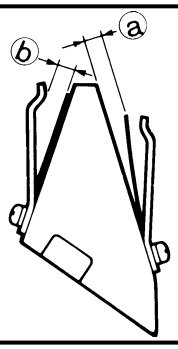

70, 75, 80, 90 hp

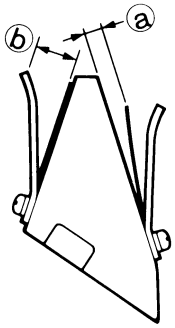

4. Using dial gauges, measure the deflection.

Maximum deflection:
50, 60, 70 hp:
0.03 mm (0.0012 in)
75, 80, 90 hp:
0.05 mm (0.0020 in)

If the deflection is greater than the specified maximum, correct the alignment by use of a copper hammer and a wedge.

If the deflection is greater than the specified maximum, replace the crankshaft assembly.

G64000-0*

REED VALVE

INSPECTION

1. Visually inspect for warping of the reed valve. If warped, measure the distortion with feeler gauges.

Warpage limit ⓐ:
0.2 mm (0.01 in)

If the amount of warping is greater than the specification, replace the reed valve.

2. Using a vernier caliper, measure the valve stopper height.

Valve stopper height ⓑ:
50, 60 hp:
3.0 ± 0.2 mm (0.12 ± 0.01 in)
70, 75, 80, 90 hp:
9.9 ± 0.2 mm (0.39 ± 0.01 in)

If the valve stopper height is outside the specification, adjust it by bending it.

3. Visually inspect for cracks on the reed valve. If cracks are found, replace the reed valve.

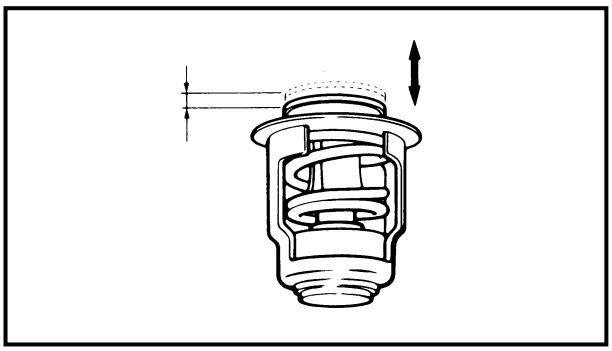

G64500-0*

THERMOSTAT

CLEANING

1. Using a soft brush and water, remove all traces of salt, dirt or corrosion.

INSPECTION

1. Visually inspect the thermostat for damage. If the thermostat is damaged or if it opens when cold, replace it.

2. Immerse the thermostat in water and heat the water gradually. Check the valve opening temperature and the valve lift.

	Water temperature	Valve lift
	Below 48 ~ 52˚C (118 ~ 126˚F)	0 mm
	Above 60˚C (140˚F)	Minimum 3 mm (0.12 in)

If the valve opening and/or temperature and valve-lift are not within the specifications, replace the thermostat.

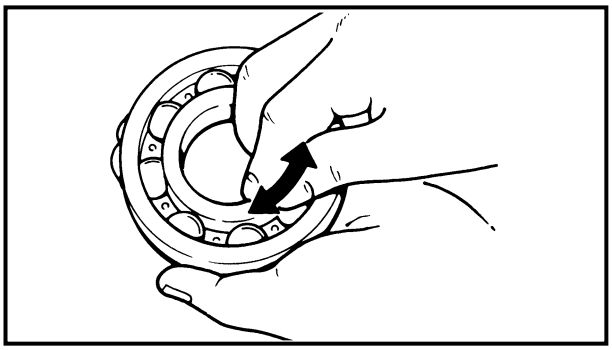

G65000-0*

CRANK MAIN BEARING

CLEANING

1. Using a soft brush and solvent, thoroughly clean the bearing. Dry it with air, and sparingly lubricate it with 2-stroke outboard motor oil.

NOTE:

Do not spin bearing with air blower. This can damage the bearing. Also, take care not to scratch the bearing balls when cleaning.

INSPECTION

1. Hold the bearing inner race and slowly turn the bearing outer race with your fingers. If any rough spots are felt, replace the bearing.

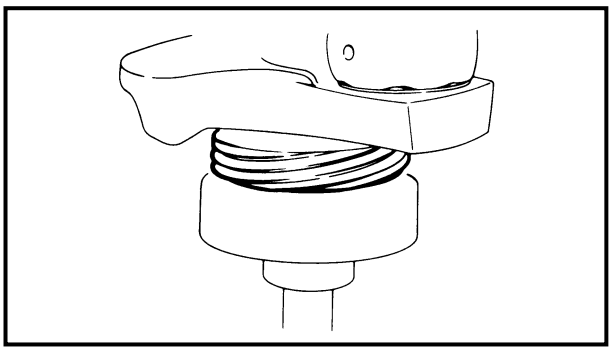

G65500-0

DRIVE GEAR (OIL INJECTION PUMP DRIVE)

INSPECTION

1. Visually inspect drive gear teeth for cracks, pitting or wear and replace the gear if any are found.

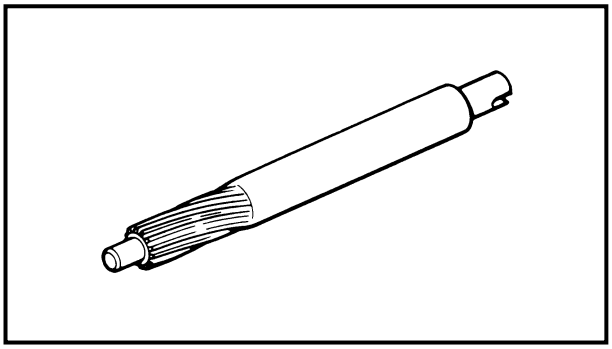

DRIVEN GEAR (OIL INJECTION PUMP DRIVE)

INSPECTION

1. Visually inspect driven gear teeth for cracks, pitting or wear and replace the gear if any are found.

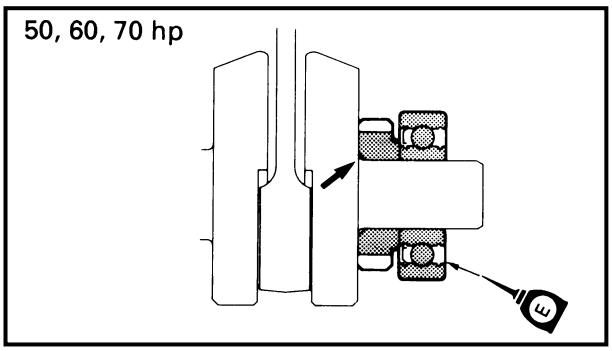

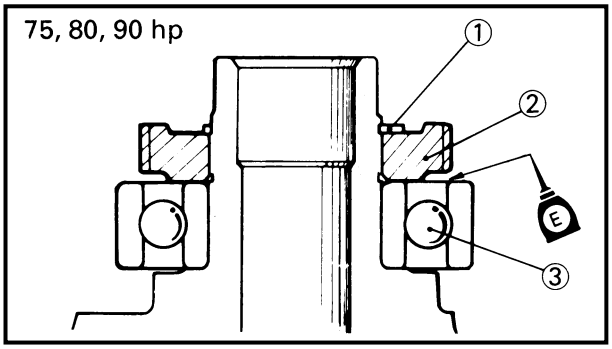

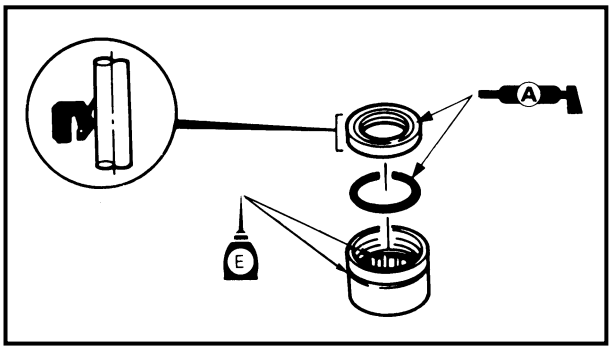

G71000-1

ASSEMBLY AND ADJUSTMENT

BEARING, OIL SEAL AND O-RING

1. Press in the new bearing.

CAUTION:

When reassembling the lower crank bearing and/or the oil-pump drive gear, the tapered side of the drive gear and the seal-cap side of the bearing should be installed towards the crank side as shown in the illustration.

75, 80, 90 hp:
Install the circlip

① Circlip
② Oil injection pump drive gear
③ Crank lower bearing

2. Install the new oil seal in the needle bearing.

CAUTION:

The direction of the oil seal must be as shown in the illustration, otherwise damage will be caused.

3. Install the new O-ring.

4. Lubricate the bearing with 2-stroke outboard motor oil. Apply water resistant grease or equivalent to the inside lip of the oil seal and to the O-ring.

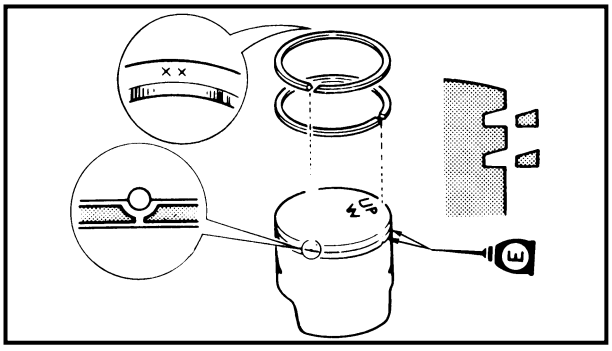

G72001-0

PISTON AND PISTON RING

1. Install the top and 2nd piston rings into their respective ring grooves with the markings facing upward.

2. Align each ring end-gap with their location pins.

G73000-0*

SMALL END BEARINGS AND PISTON ASSEMBLY

1. Count the small-end bearing needles.

Number of needles per small end: 28-pcs.

CAUTION:

Do not use a mixture of new and used bearing needles in the same small end.

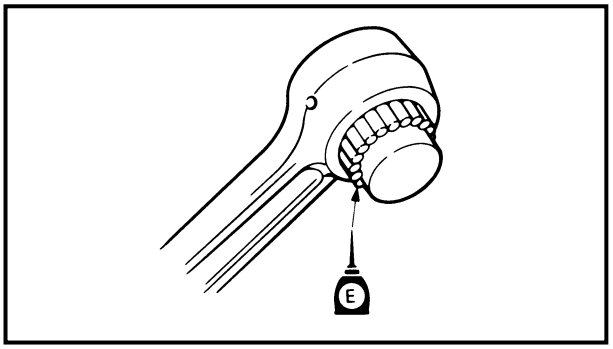

2. Using the special service tool, install the bearings in the connecting-rod small end and place washers on both sides.



Small end bearing installer:
50, 60, 70 hp:
YB-6287/90890-06527
75, 80, 90 hp:
YB-6107/90890-06527

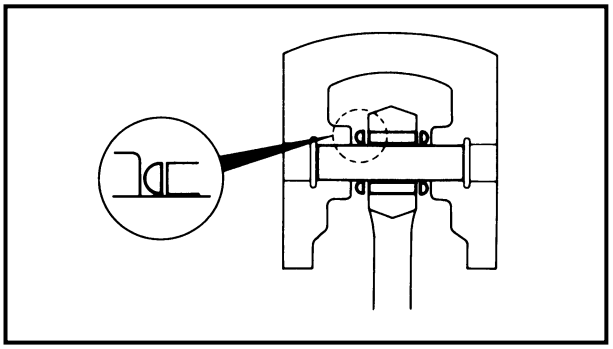

CAUTION:

The washer should be placed with their convex sides facing the piston.

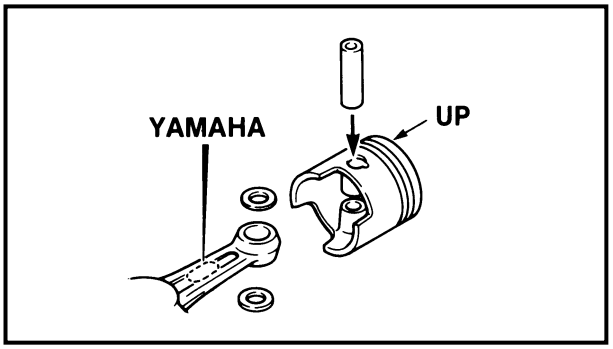

3. Insert the piston-pin into the piston.
4. Align the "UP" mark on the piston crown towards the crankshaft's tapered end. Install the piston in the connecting-rod small end, insert the piston-pin, then install new piston-pin clips.
5. Lubricate each bearing with 2-stroke outboard-motor oil.

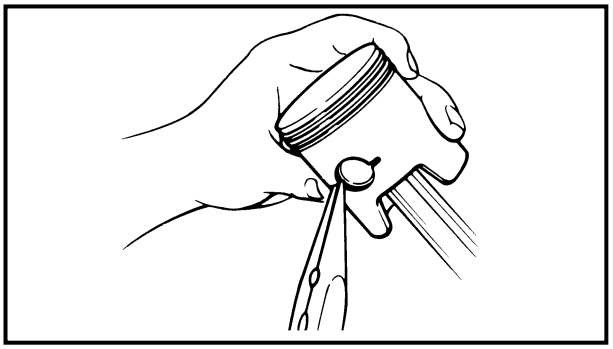

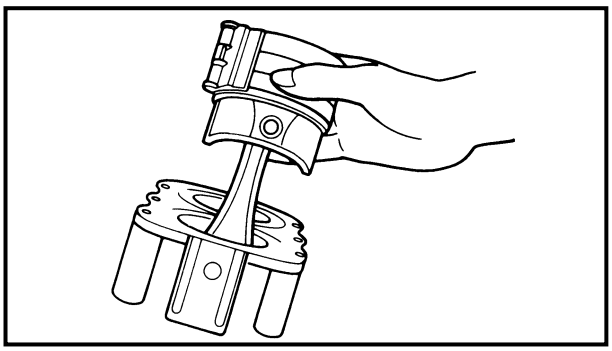

G78000-0*

CONNECTING ROD BIG END BEARING ASSEMBLY (75, 80, 90 hp)

1. Install the piston.
   Align the ring ends with locating pins in the grooves and using the piston slider, push the piston into the cylinder.

	**Piston slider:** **YU-33294/90890-06530**

NOTE:

The "UP" mark on the piston crown should be on the flywheel side. Be sure to apply oil to the piston and cylinder wall.

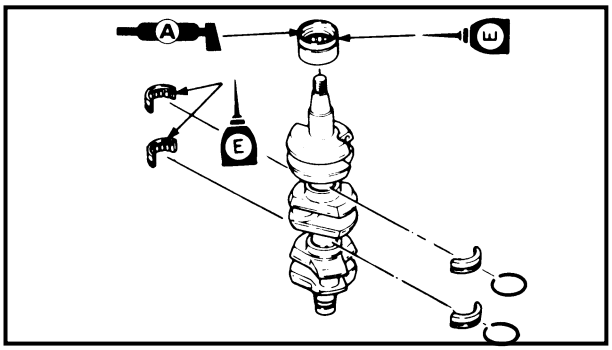

2. Place the crankshaft on the cylinder, and align the upper, upper middle and lower middle bearing pin holes with the pins on the cylinder, and fit the crankshaft correctly to the cylinder.

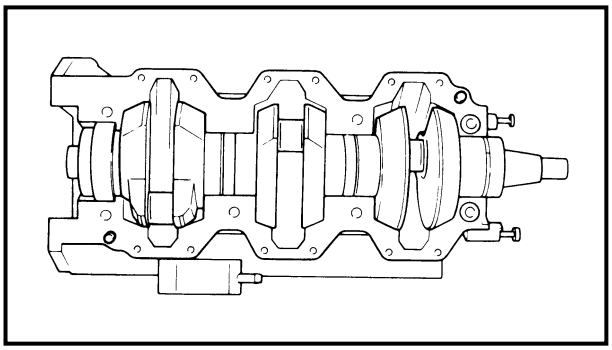

3. Install the bearing in the big end and install the cap.
   The cap bolts should be tightened in the following manner.
   a. Lightly screw in the bolts by hand while making sure the cap and rod ends are aligned completely. Then, tighten the bolts to the 1st specified torque.
      Next, tighten to the 2nd specified torque. Check to see that the cap and rod ends are aligned. If not aligned, do the above procedure all over again.
   b. Loosen the bolts 1/2 turn and tighten them to the 1st specified torque. Then, tighten to the 2nd specified torque.

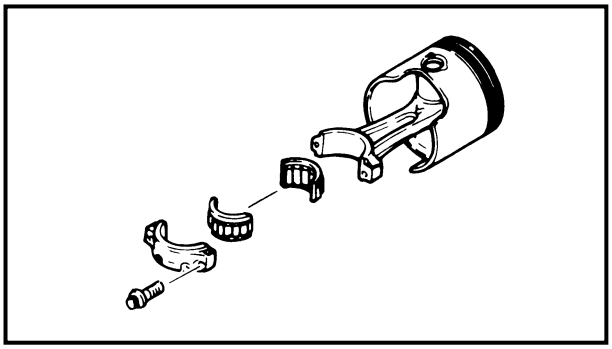

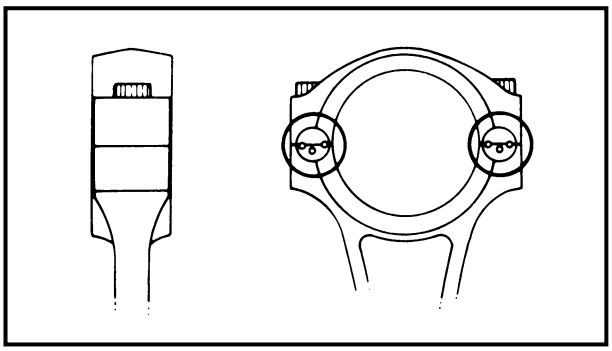

NOTE:

Replace the cap bolts each time the connecting rod is disassembled.

Connecting rod big end:
(75, 80, 90 hp)
1st step:
12 Nm (1.2 m • kg, 8.7 ft • lb)
2nd step:
35 Nm (3.5 m • kg, 25 ft • lb)

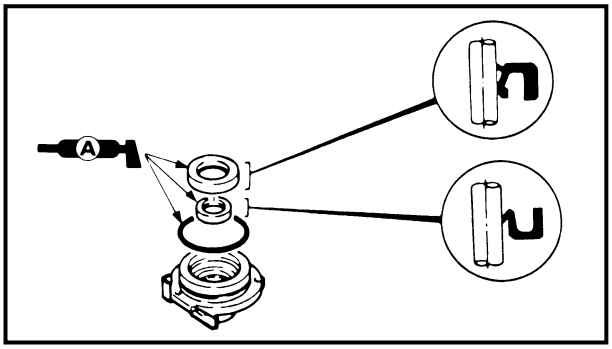

G79000-1*

OIL SEAL HOUSING

1. Press-fit the oil seals one by one.

CAUTION:

When press-fitting the oil seal, be sure that if faces in the correct direction.

2. Fit the new O-ring in the grooves in the oil seal housing outer surfaces.
3. After installing the oil seal and O-ring, pack the oil seal lip and outer surface of the O-ring with water resistant grease.

NOTE:

Avoid cutting or stretching the oil seal housing O-ring.

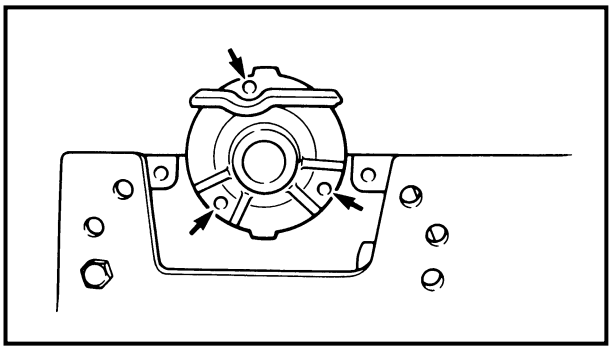

4. Install the oil seal housing onto the cylinder and align the bolt holes.

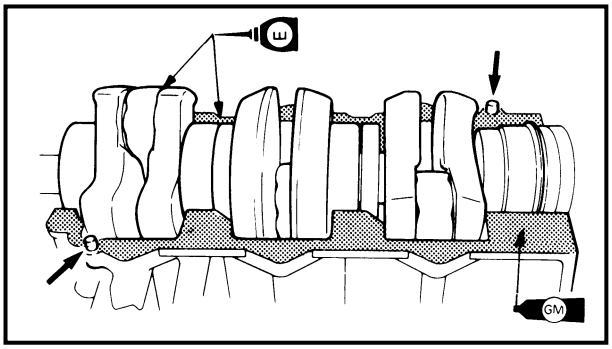

G74000-0*

CRANK CYLINDER ASSEMBLY (50, 60, 70 hp)

1. Lubricate the piston-rings and pistons with 2-stroke outboard-motor oil and install the crank assembly into the cylinder block.

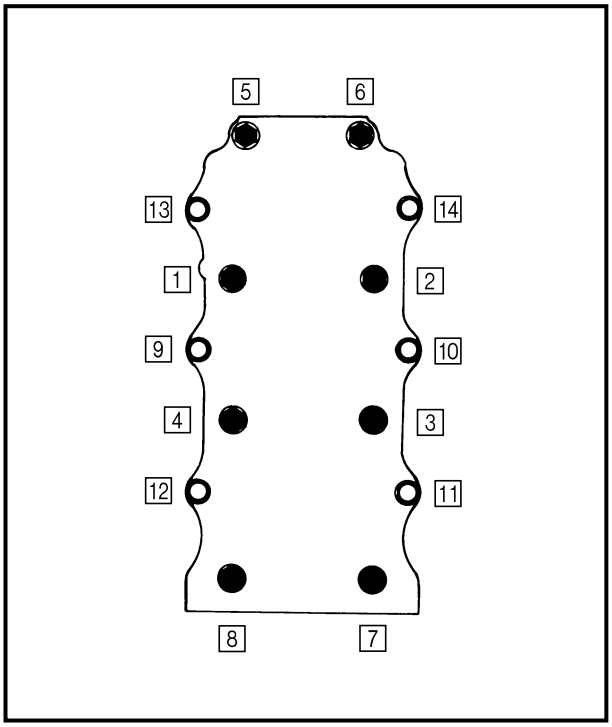

2. Lift the crank assembly a little in order to install a washer on the lower crankcase and align each location-pin of the bearings and labyrinth-seals with each cut on the cylinder-block. Then, fit the crank assembly in place.

3. Film-coat the cylinder-block mating surface with Gasket Maker or equivalent.

4. Install the dowel-pins.

5. Match the cylinder-block and tighten the bolts to the specified torque in sequence and in two steps.

Crankcase bolt (50, 60, 70 hp)
1st step:
M8: 10 Nm (1.0 m • kg, 7.2 ft • lb)
M10: 20 Nm (2.0 m • kg, 14 ft • lb)
2nd step:
M8: 20 Nm (2.0 m • kg, 14 ft • lb)
M10: 40 Nm (4.0 m • kg, 29 ft • lb)

6. Check that the crankshaft turns smoothly.

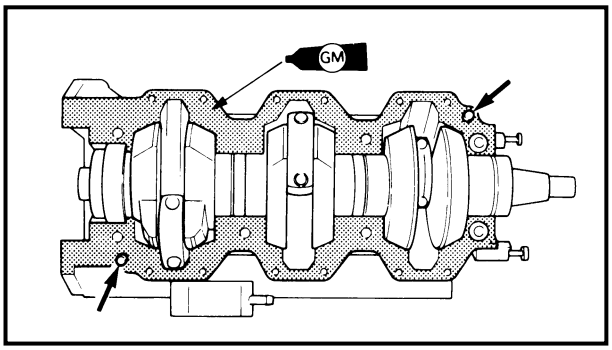

G74002-0*

CRANK CYLINDER ASSEMBLY (75, 80, 90 hp)

1. Align each locating-pin of the bearings and labyrinth-seals with each cut on the cylinder-block. Then, fit the crank assembly in place.

2. Film-coat the cylinder-block mating surface with Gasket Maker or equivalent.

3. Install the dowel-pins.

4. Match the cylinder-block and tighten the bolts to the specified torque in sequence and in two steps.

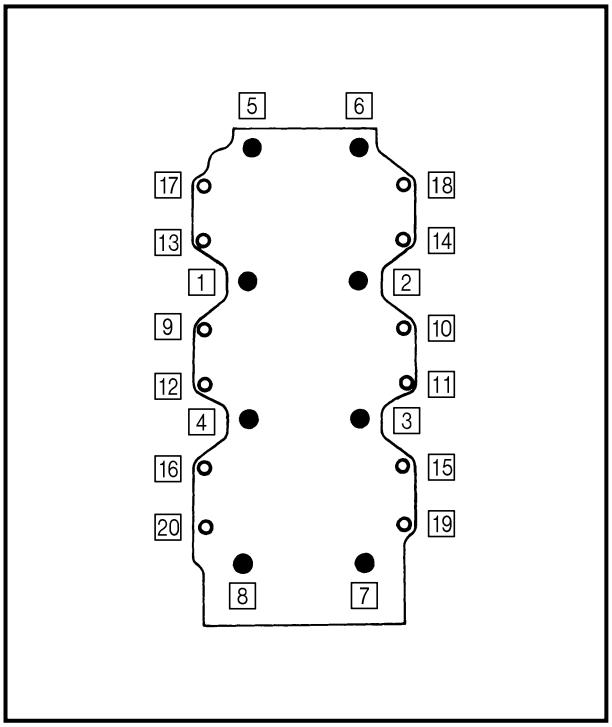

Crankcase bolt (75, 80, 90 hp)
1st step:
M6: 4 Nm (0.4 m • kg, 2.9 ft • lb)
M10: 20 Nm (2.0 m • kg, 14 ft • lb)
2nd step:
M6: 12 Nm (1.2 m • kg, 8.7 ft • lb)
M10: 40 Nm (4.0 m • kg, 29 ft • lb)

5. Check that the crankshaft turns smoothly.

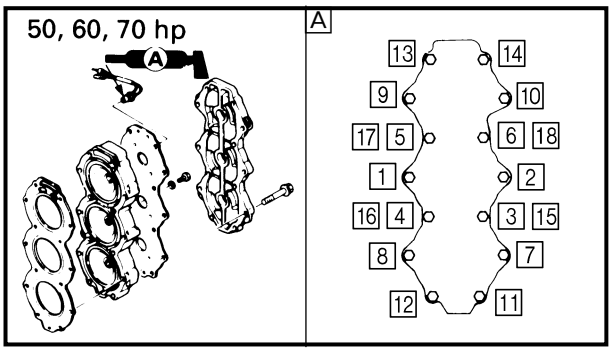

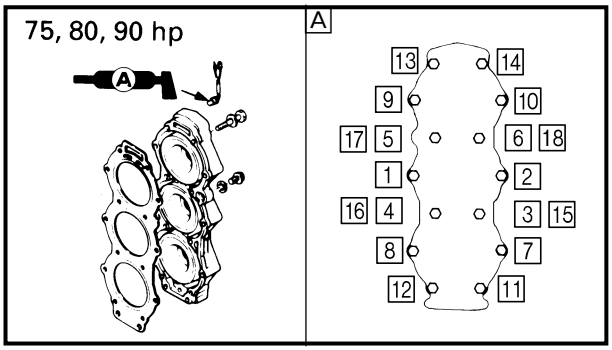

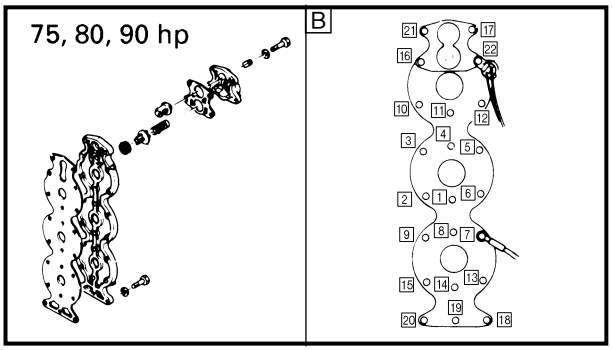

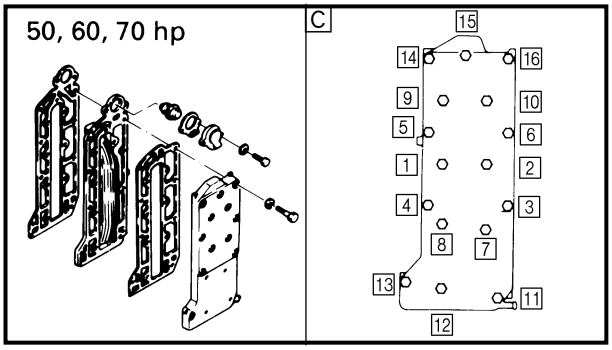

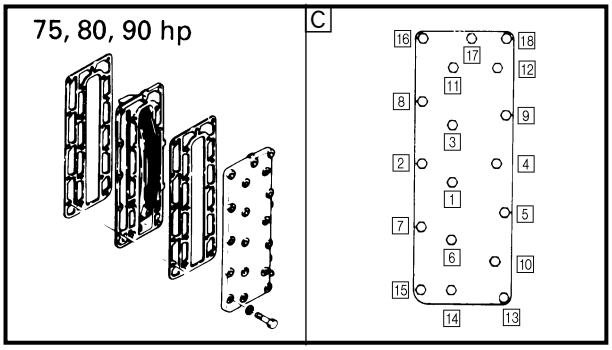

G75000-0*

CYLINDER HEAD AND EXHAUST COVER

1. Install the gaskets cylinder-head cover and exhaust cover.

2. Tighten the bolts to the specified torque in sequence and in two steps.

A Tightening sequence

Cylinder head (50, 60, 70 hp):
1st step:
15 Nm (1.5 m • kg, 11 ft • lb)
2nd step:
32 Nm (3.2 m • kg, 23 ft • lb)
Cylinder-head (75, 80, 90 hp):
1st step:
15 Nm (1.5 m • kg, 11 ft • lb)
2nd step:
30 Nm (3.0 m • kg, 22 ft • lb)

B Tightening sequence

C Tightening sequence

Exhaust cover (50, 60, 70 hp):
1st step:
3 Nm (0.3 m • kg, 2.2 ft • lb)
2nd step:
8 Nm (0.8 m • kg, 5.8 ft • lb)
Exhaust cover (75, 80, 90 hp):
1st step:
9 Nm (0.9 m • kg, 6.5 ft • lb)
2nd step:
18 Nm (1.8 m • kg, 13 ft • lb)

3. Install the thermostat, gasket and cover.

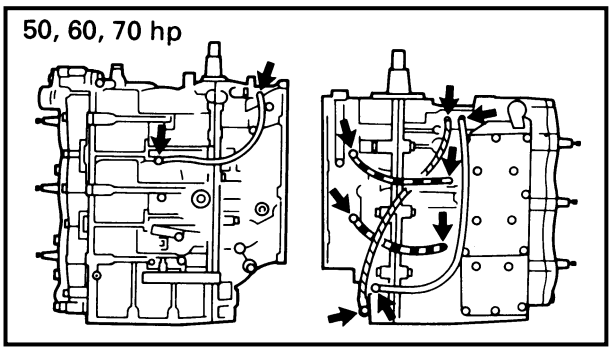

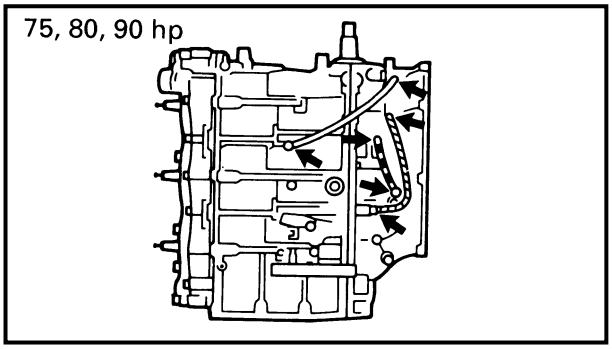

G75500-0

DRAINAGE HOSE

1. Fit two clips around the drainage hose.
2. Connect one end of the hose to the delivery side of the check valve and the other end to the joint on the intake side and lock with the clips.

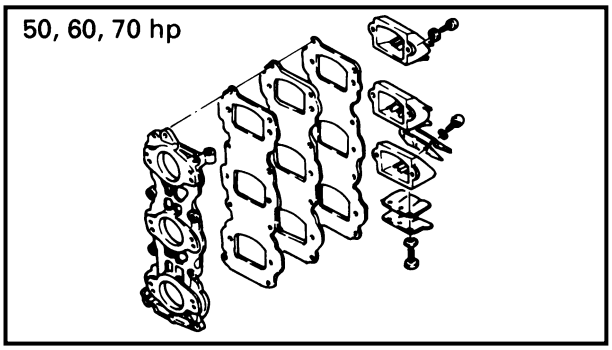

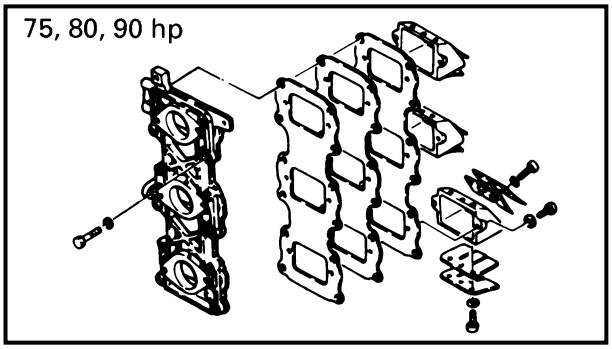

G76000-0*

INTAKE MANIFOLD

1. Install the reed-valve assembly and the gasket reed-valve plate to the intake manifold.
2. Install the manifold assembly to the crankcase and tighten the bolts to the specified torque in sequence and in two steps.

Intake manifold (50, 60, 70 hp):
1st step:
4 Nm (0.4 m • kg, 2.9 ft • lb)
2nd step:
8 Nm (0.8 m • kg, 5.8 ft • lb)
Intake manifold (75, 80, 90 hp):
1st step:
4 Nm (0.4 m • kg, 2.9 ft • lb)
2nd step:
12 Nm (1.2 m • kg, 8.7 ft • lb)

G77000-0*

FUEL SYSTEM AND ELECTRICAL SYSTEM

1. Install the fuel system.
   Refer to "FUEL SYSTEM" section in chapter 4.
2. Install the electrical system.
   Refer to "ELECTRICAL COMPONENTS" section in chapter 8.

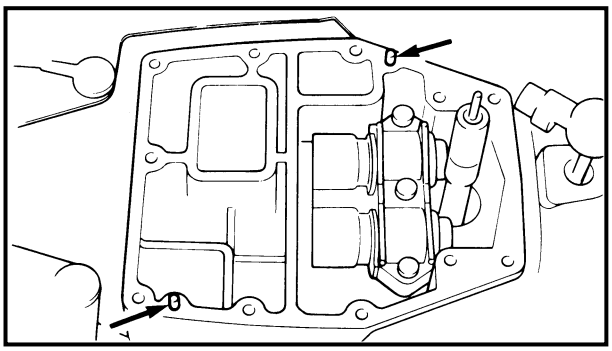

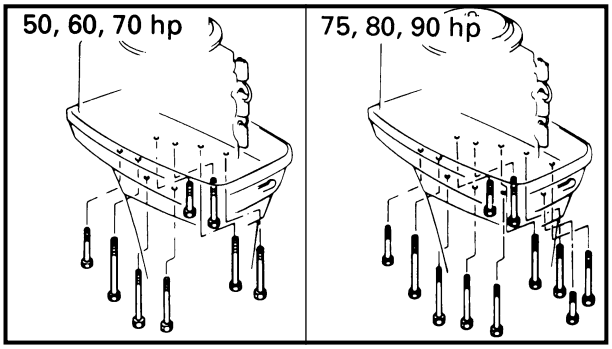

G8000-0*

INSTALLATION

1. Install locating pins in position on the exhaust guide.
2. Align the locating-pin holes on the gasket with dowel pins and place the gasket on the bottom cowling.
3. Install the power head onto the bottom cowling, tighten the mounting-bolts to the specified torque.

	Mounting bolts: **21 Nm (2.1 m • kg, 15 ft • lb)**

4. Connect the hoses, cables and wires.
5. Install the apron.
6. Check the fittings installation, cable connections and functions before starting the engine to check operation and to check for leaks.

CHAPTER 6
LOWER UNIT

EXPLODED DIAGRAM (FOR 50GETO, C60ER, C60TR/60FET (OCEANIA), C75TR, 90AEHD, 90AED, C90TR/90AET) 6-1

EXPLODED DIAGRAM (EXCEPT FOR 50GETO, C60ER, C60TR/60FET (OCEANIA), C75TR, 90AEHD, 90AED, C90TR/90AET) 6-2

PREPARATION FOR REMOVAL 6-3

DISASSEMBLY 6-3

INSPECTION 6-9
- GEAR CASE 6-9
- BEARING HOUSING 6-9
- CLAW-WASHER 6-9
- RING-NUT 6-9
- WATER PUMP HOUSING 6-10
- IMPELLER 6-10
- OIL-SEAL HOUSING (Water pump housing) 6-10
- GEAR 6-10
- BEARING 6-10
- CLUTCH DOG AND COMPONENTS 6-11
- DRIVE AND PROPELLER SHAFT 6-11
- DRIVE SHAFT SLEEVE 6-11
- PROPELLER/TRIM TAB/ANODE 6-11

ASSEMBLY AND ADJUSTMENT 6-12
- PROPELLER-SHAFT HOUSING 6-12
- GEAR CASE 6-13

SHIM SELECTION 6-17
  - FOR USA AND CANADA 6-17
  - EXCEPT FOR USA AND CANADA 6-22
- MEASURING THE BACKLASH 6-25
- WATER PUMP INSTALLATION 6-28

INSTALLATION 6-29
- LOWER UNIT LEAKAGE CHECK 6-31

EXPLODED DIAGRAM (FOR 50GETO, C60ER, C60TR/60FET (OCEANIA), C75TR, 90AEHD, 90AED, C90TR/90AET)

① Water pump housing
② Impeller
③ Cartridge outer plate
④ Cartridge outer plate gasket
⑤ Oil-seal housing
⑥ Water pump gasket
⑦ Drive shaft
⑧ Woodruff key
⑨ Drive shaft sleeve
⑩ Needle bearing
⑪ Shifter
⑫ Shift slide
⑬ Forward gear
⑭ Clutch dog
⑮ Cross pin
⑯ Propeller shaft
⑰ Reverse gear
⑱ O-ring
⑲ Bearing
⑳ Bearing housing
㉑ Needle bearing
㉒ Claw washer
㉓ Ring nut
㉔ Spacer
㉕ Propeller
㉖ Castle nut
㉗ Trim tab
㉘ Pinion gear
㉙ Spacer (50GETO)

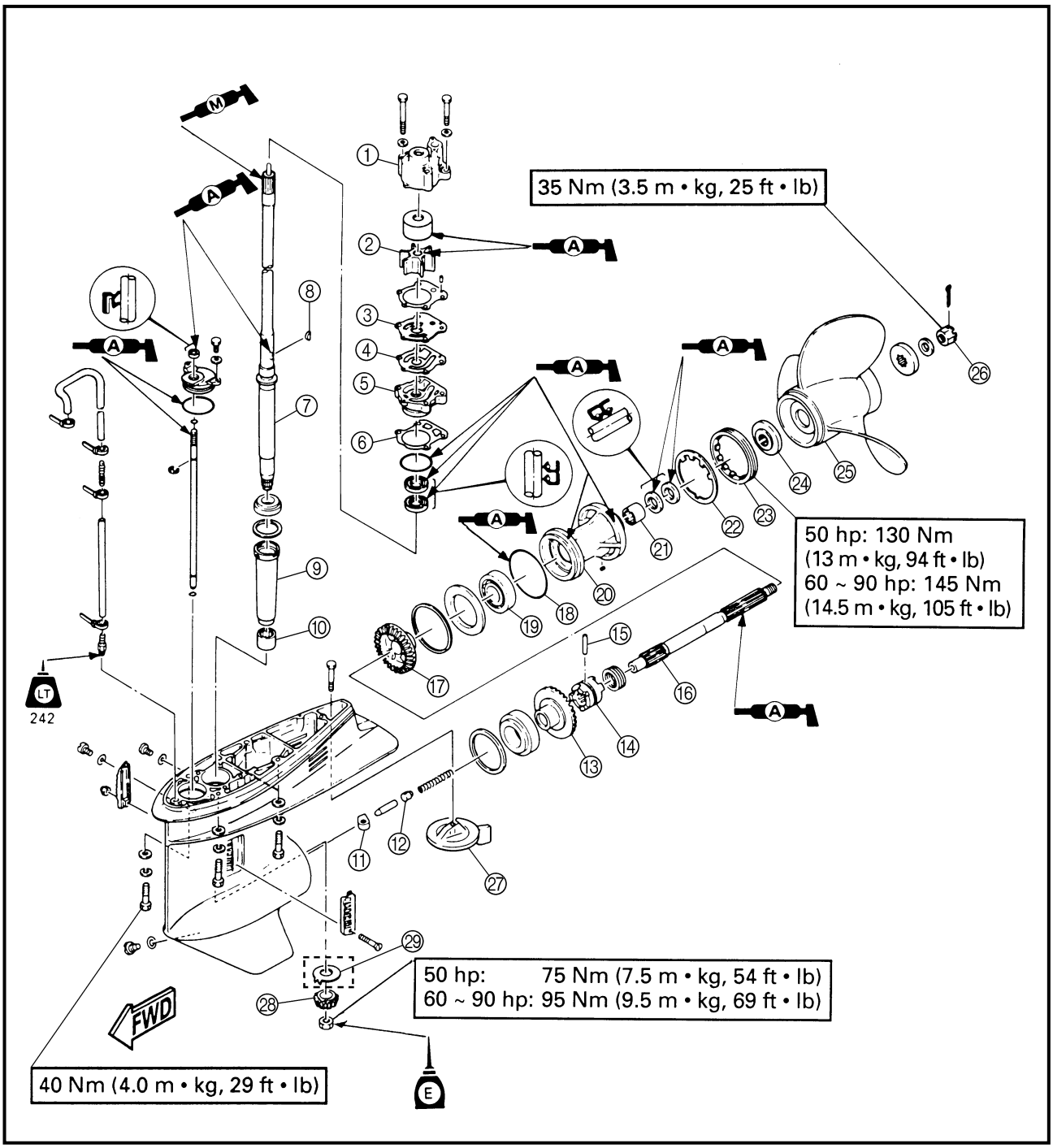

EXPLODED DIAGRAM (EXCEPT FOR 50GETO, C60ER, C60TR/60FET (OCEANIA), C75TR, 90AEHD, 90AED, C90TR/90AET)

① Water pump housing
② Impeller
③ Cartridge outer plate
④ Cartridge outer plate gasket
⑤ Oil-seal housing
⑥ Water pump gasket
⑦ Drive shaft
⑧ Woodruff key
⑨ Drive shaft sleeve
⑩ Needle bearing
⑪ Shifter
⑫ Shift slide
⑬ Forward gear
⑭ Clutch dog
⑮ Cross pin
⑯ Propeller shaft
⑰ Reverse gear
⑱ O-ring
⑲ Bearing
⑳ Bearing housing
㉑ Needle bearing
㉒ Claw washer
㉓ Ring nut
㉔ Spacer
㉕ Propeller
㉖ Castle nut
㉗ Trim tab
㉘ Pinion gear

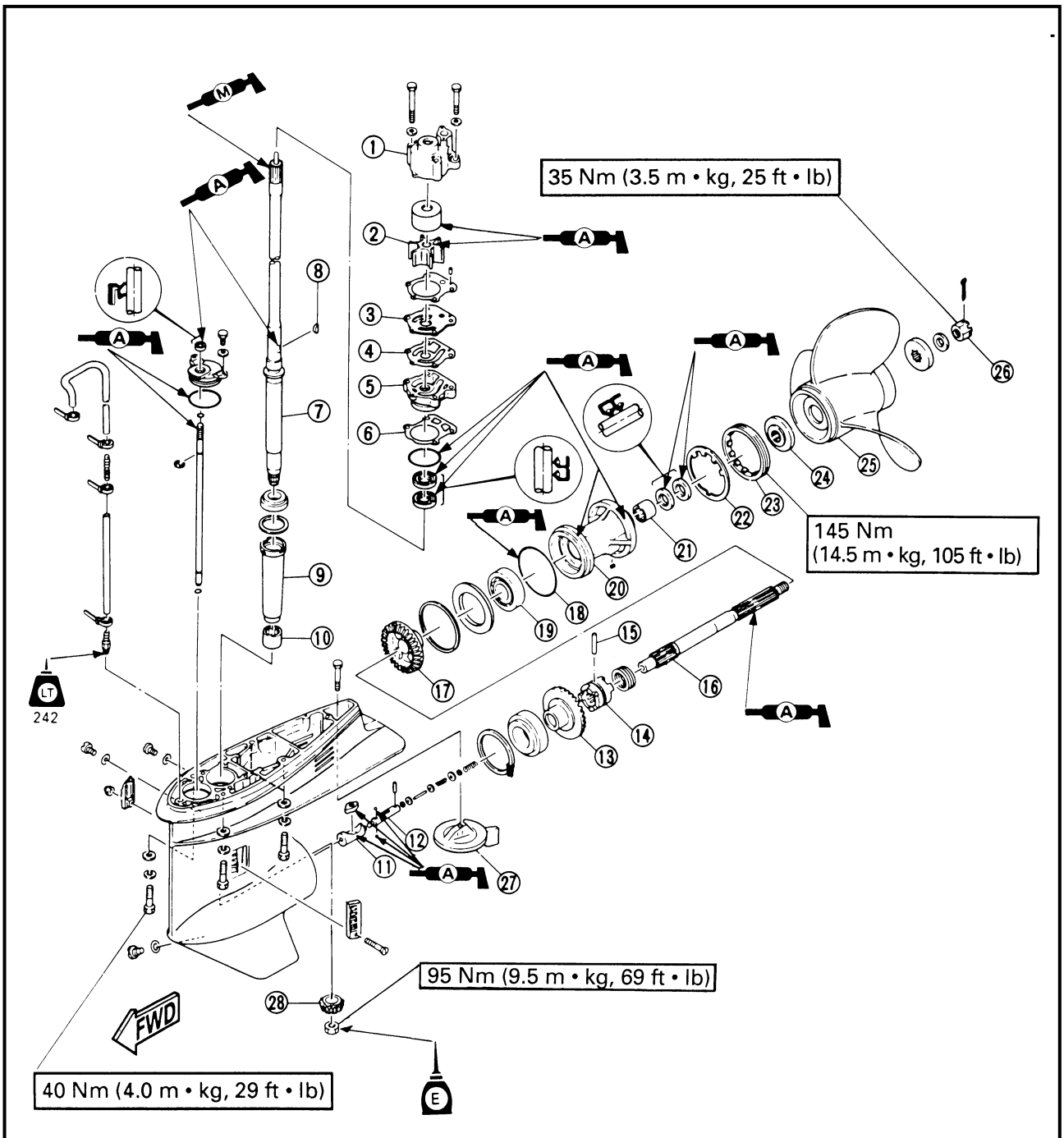

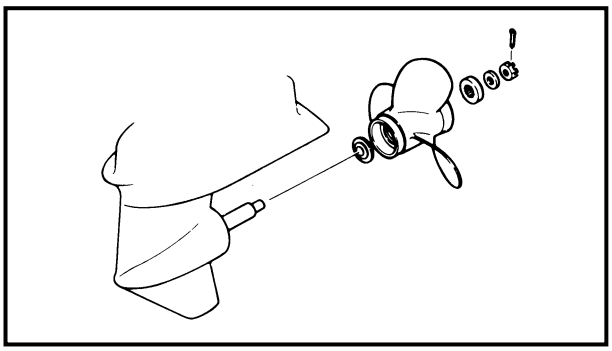

120001-0*

PREPARATION FOR REMOVAL

1. Remove the nut, washer, propeller and spacer from the propeller shaft.
2. Drain the gear oil by removing the plugs from the oil-filling hole and the oil-level hole. Be sure to remove the oil filling plug first.

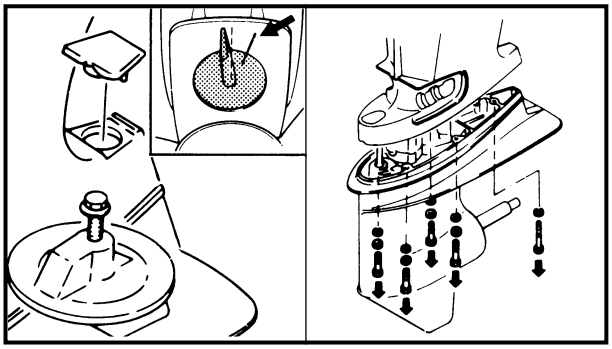

3. Set the shift lever into neutral position.
4. Tilt up the lower unit and lock it with the tilt lock lever.
5. Remove the trim tab. Before removing it, put a mark indicating its position on the anticavitation plate.
6. Remove the bolts.

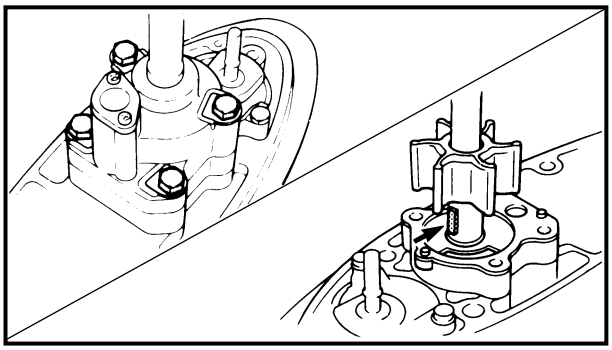

140007-0

DISASSEMBLY

1. Referring to the exploded diagram, remove the following parts.
   1) Water pump housing and insert cartridge
   2) Impeller and woodruff key

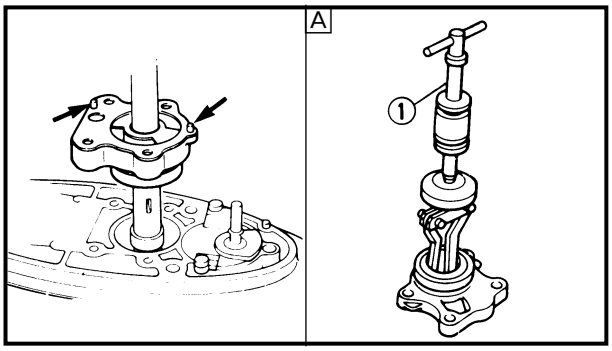

   3) Oil-seal housing
      (Water pump housing)
      Remove the oil seals, if necessary



Slide hammer set:
YB-6096 ①
Stopper guide plate:
90890-06501 ②
Bearing puller:
90890-06535 ③
Stopper guide stand:
90890-06538 ④

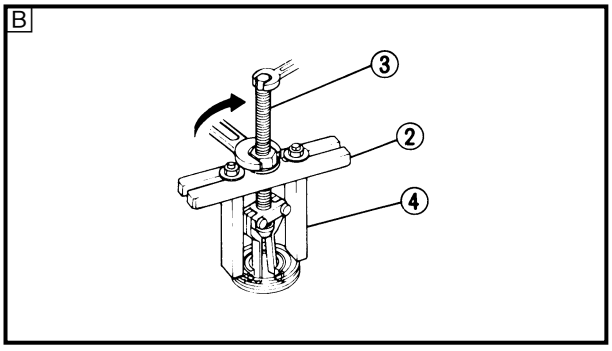

A For USA and Canada
B Except for USA and Canada

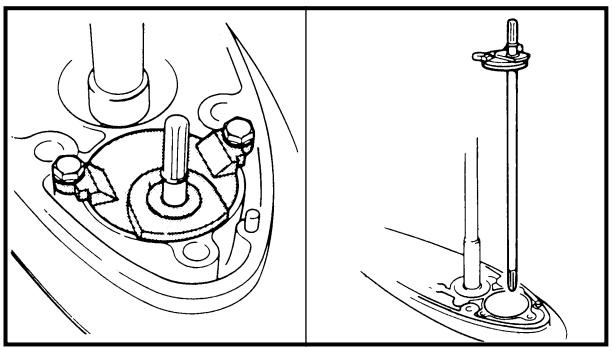

4) Shift-rod

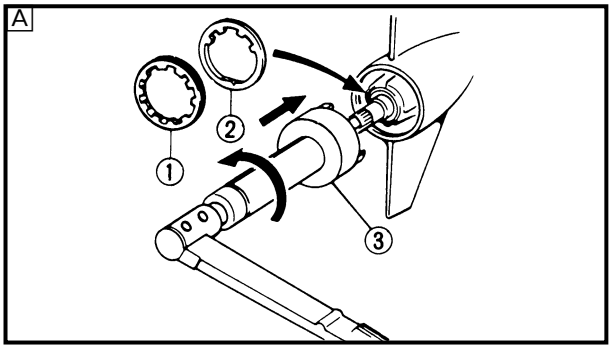

5) Ring-nut ① and claw-washer ②

Ring nut wrench:	
YB-34447	③
90890-06511	④
Extension (ring nut wrench):	
90890-06513	⑤

A For USA and Canada
B Except for USA and Canada

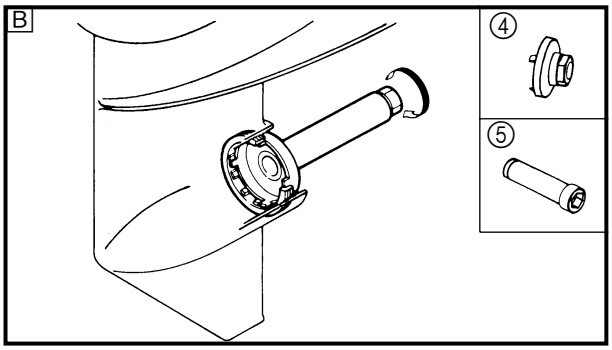

NOTE:
To remove the ring-nut: straighten the lobe of the claw-washer by using a screwdriver, then attach and turn it in the direction of the off mark using the special service tool.

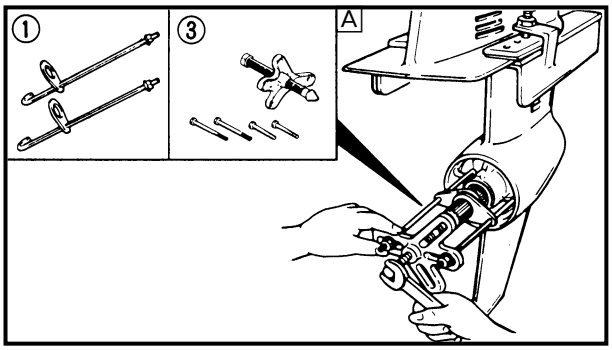

6) Bearing-housing
Using special service tool.

Claw:	
YB-6207	①
50, 60, 70 hp:	
90890-06503	②
75, 80, 90 hp:	
90890-06502	②
Flywheel puller:	
YB-6117	③
Stopper guide plate:	
90890-06501	④
Center bolt:	
90890-06504	⑤

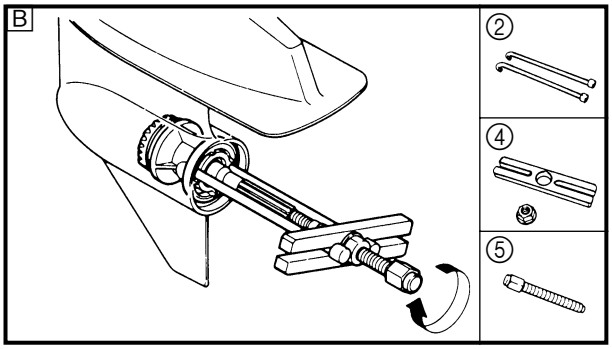

A For USA and Canada
B Except for USA and Canada

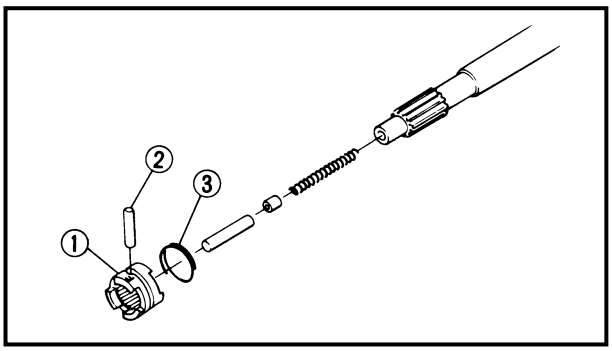

7) Propeller shaft
(For 50GETO, C60ER, C60TR/60FET (Oceania), C75TR, 90AEHD, 90AED, C90TR/90AET)

① Clutch dog
② Cross pin
③ Cross pin ring

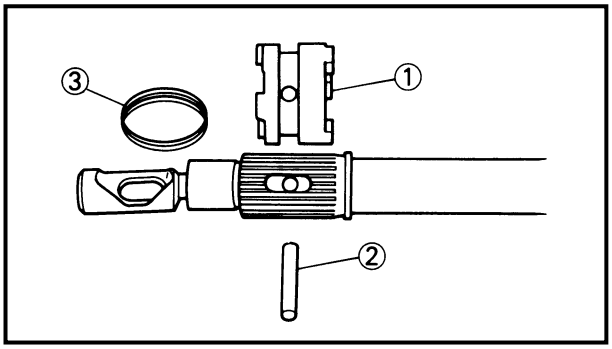

7) Propeller shaft
(Except for 50GETO, C60ER, C60TR/60FET (Oceania), C75TR, 90AEHD, 90AED, C90TR/90AET)

① Clutch dog
② Cross pin
③ Cross pin ring

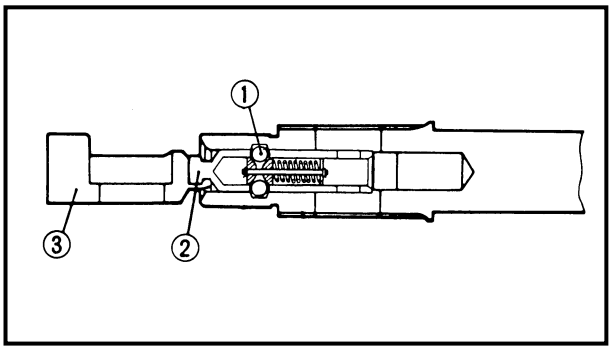

8) Shift slide
(Except for 50GETO, C60ER, C60TR/60FET (Oceania), C75TR, 90AEHD, 90AED, C90TR/90AET)
Using a slotted screwdriver, remove the shift slide balls ① from the neutral position and pull out the shift slide ② and shifter ③.

A

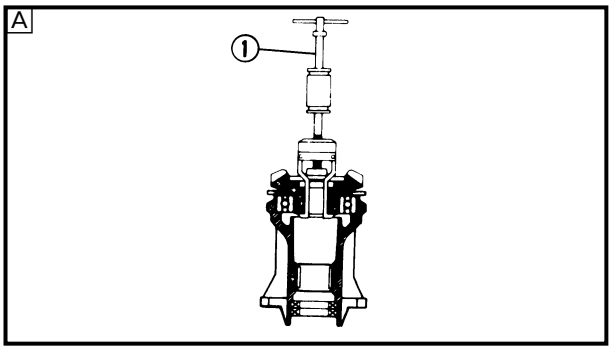

9) Reverse gear and bearing



Slide hammer set:
YB-6096 ..... ①
Stopper guide plate:
90890-06501 ..... ②
Bearing puller:
90890-06535 ..... ③
Stopper guide stand:
90890-06538 ..... ④

A For USA and Canada
B Except for USA and Canada

B

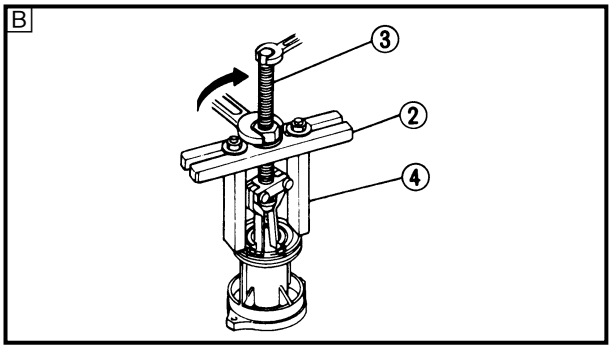

A

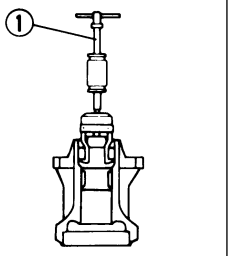

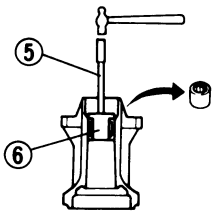

B

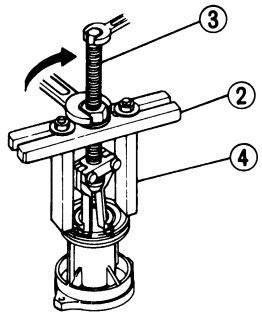

A

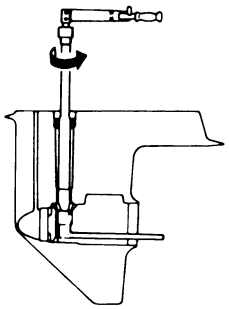

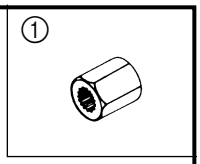

B

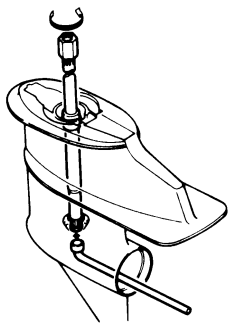

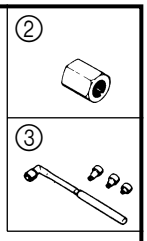

10) Oil seals and needle bearing



Slide hammer set:
YB-6096 ..... ①
Stopper guide plate:
90890-06501 ..... ②
Bearing puller:
90890-06535 ..... ③
Stopper guide stand:
90890-06538 ..... ④
Driver rod:
YB-6071/90890-06602 ..... ⑤
Needle bearing attachment:
YB-6153/90890-06612 ..... ⑥

A For USA and Canada
B Except for USA and Canada

11) Pinion nut, pinion and drive shaft bearing inner race



Drive shaft holder:
50, 60, 70 hp:
YB-6049/90890-06518 ..... ①
75, 80, 90 hp:
YB-6151/90890-06519 ..... ②
Pinion nut holder:
90890-06505 ..... ③

A For USA and Canada
B Except for USA and Canada

NOTE:

For ease of reassembly and adjustment, keep shim packs in their groups as removed.

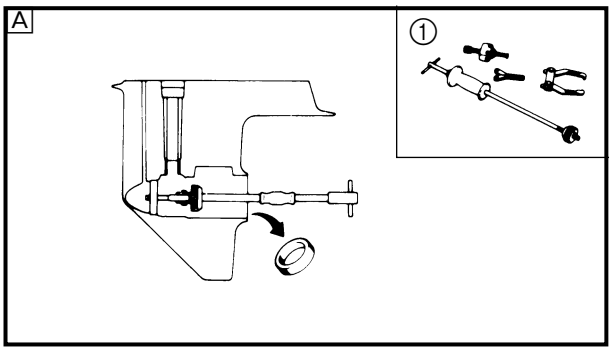

12) Forward gear bearing outer race

Slide hammer set:
YB-6096 ..... ①
Bearing outer race puller:
90890-06523 ..... ②

A For USA and Canada
B Except for USA and Canada

NOTE:

For ease of reassembly and adjustment, keep shim packs in their groups as removed.

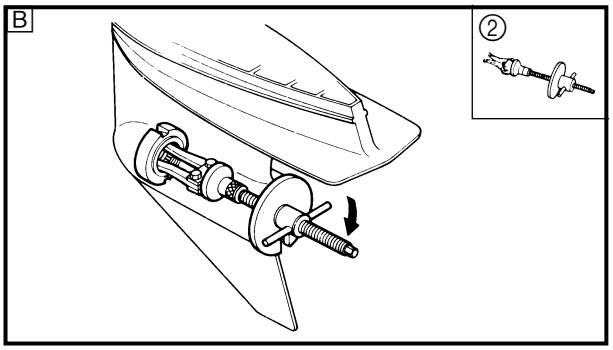

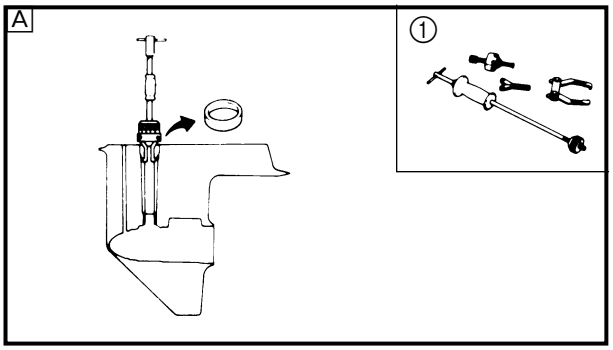

13) Drive shaft bearing outer race

Slide hammer set:
YB-6096 ..... ①
Stopper guide plate:
90890-06501 ..... ②
Bearing puller:
90890-06535 ..... ③
Stopper guide stand:
90890-06538 ..... ④

A For USA and Canada
B Except for USA and Canada

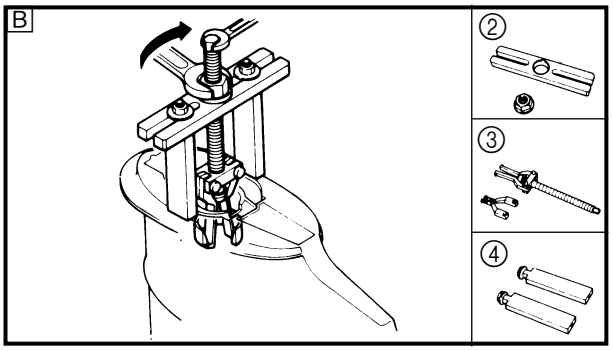

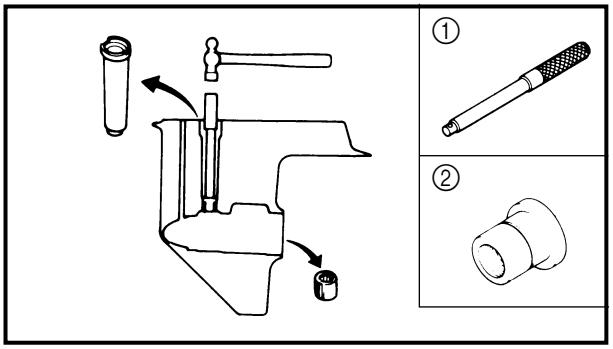

14) Drive shaft sleeve
15) Drive shaft needle bearing

Driver rod:
YB-6071/90890-06602 ..... ①
Needle bearing attachment:
YB-6155/90890-06611 ..... ②

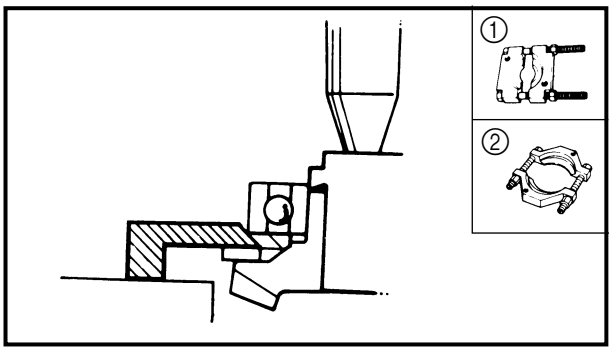

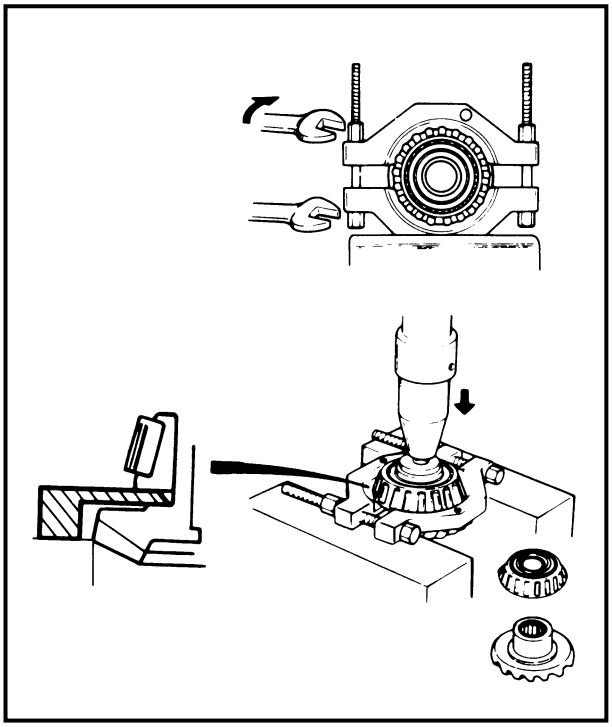

16) Reverse gear bearing and forward gear bearing



Bearing separator:
YB-6219..... ①
90890-06534..... ②

NOTE:
Separate the bearing from the gear using special service tool and hydraulic press.

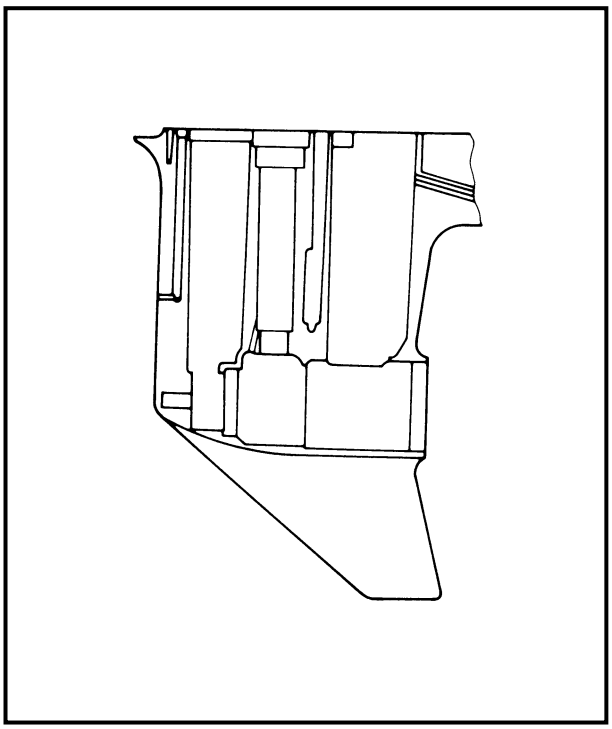

151001-0

INSPECTION

GEAR CASE

1. Using a soft brush and solvent, clean the case and water passage.
2. Visually inspect the gear case for cracks, corrosion or distortion. If any crack or excessive corrosion is found, replace the gear case.
3. Check the water inlet cover and water passage for clogging.

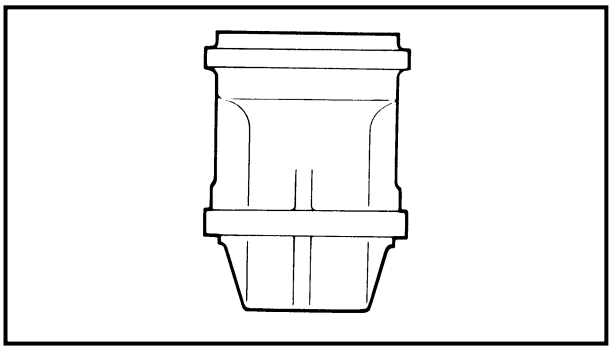

151500-0

BEARING HOUSING

1. Using a soft brush and solvent, clean the housing thoroughly.
2. Visually inspect the housing for cracks and corrosion. If any damage is found, replace the bearing housing.

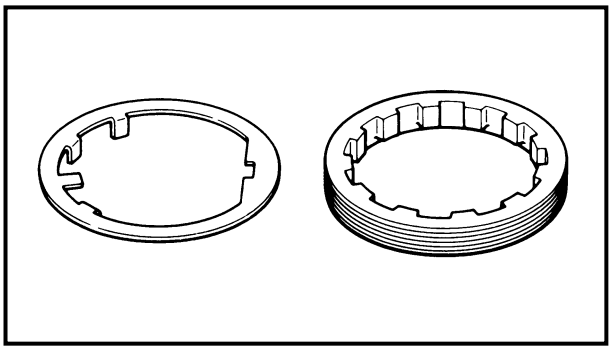

152000-0

CLAW-WASHER

1. Visually inspect the washer for cracks. If a crack is found, replace the claw-washer.

152500-0

RING-NUT

1. Using a soft brush and solvent, clean the thread of the ring-nut.
2. Visually inspect the ring-nut for cracks or damage to the thread. If cracked or damaged, replace the ring-nut.

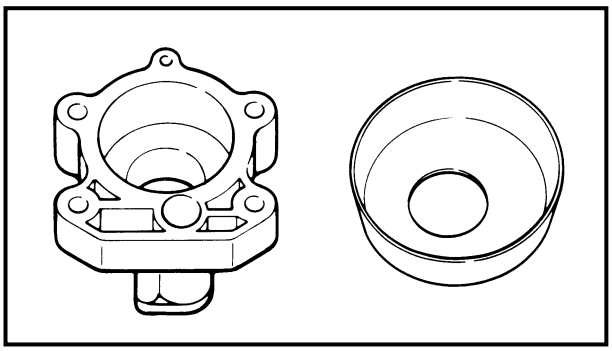

153000-0

WATER PUMP HOUSING

1. Inspect the water pump housing for signs of twisting or scratches of the inner cartridge. If twisted or scratched excessively, replace the housing.
2. During the above operation, inspect the impeller plate and replace this if damaged.

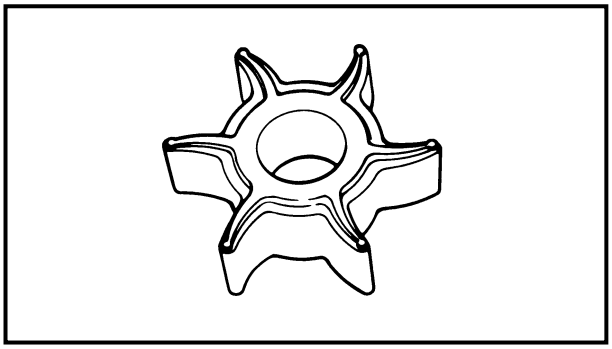

153500-0

IMPELLER

1. Visually inspect the impeller for cracks, distortion or burning. If any damage is found, replace the impeller.

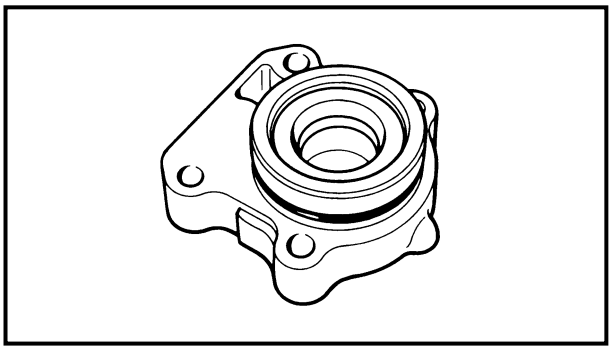

154000-0

OIL-SEAL HOUSING
(Water pump housing)

1. Using a soft brush and solvent, clean the oil-seal housing.
2. Visually inspect the housing for cracks or corrosion. If a crack and/or excessive corrosion is found, replace the oil-seal housing.

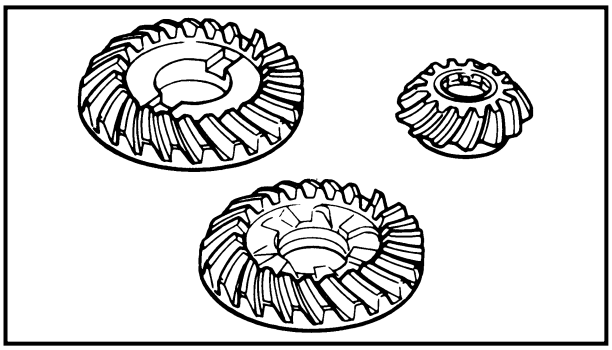

154500-0

GEAR

1. Visually inspect the teeth and dogs on the gears for cracks, peeling or distortion due to gear-crashing. If damage is found on any of the gears, replace with a new one.

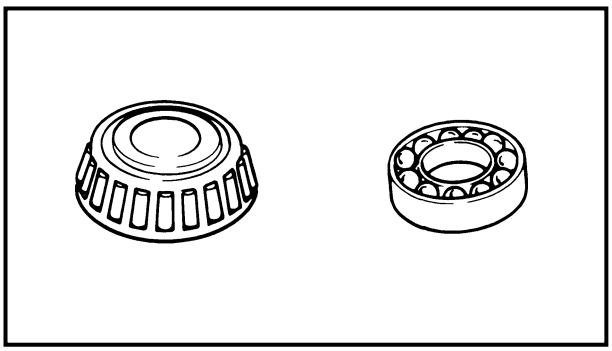

155000-0

BEARING

1. Inspect the bearings for pitting, scratching or rumbling (which may be detected by turning the bearing by hand), and replace them if they are not in good condition.

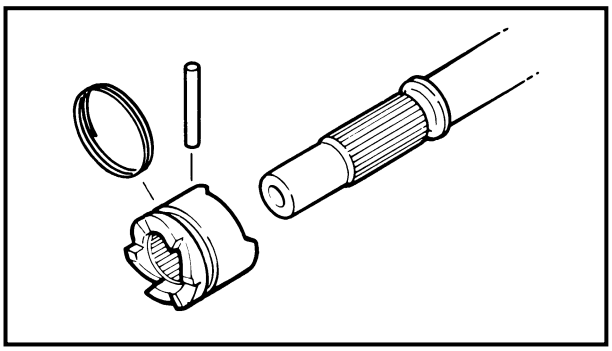

15500-0

CLUTCH DOG AND COMPONENTS

1. Visually inspect the clutch dog, looking particularly for rounding of the dog edge, cracks and other signs of damage or wear. If the dog is excessively rounded, inspect the mating gear, and replace both if necessary.

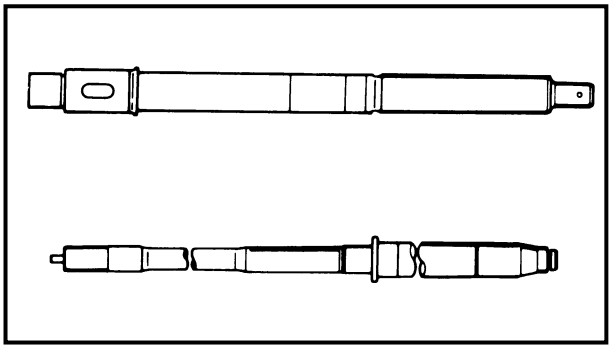

156000-0

DRIVE AND PROPELLER SHAFT

1. Visually inspect the shafts, looking for grooved wear on the surface in contact with the bearings and oil-seals and checking for wear on the splines. Replace if worn or damaged.

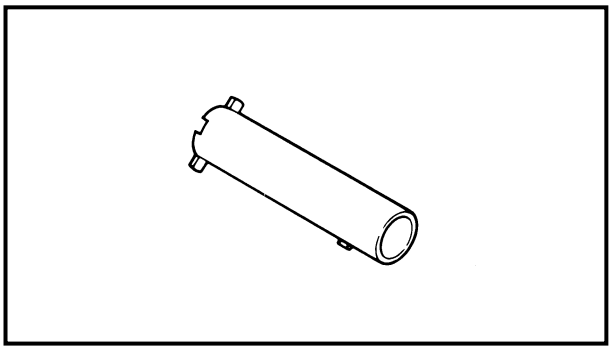

156300-0

DRIVE SHAFT SLEEVE

1. Visually inspect the sleeve for wear and cracks. If any damage is found, replace the sleeve.

157000-0*

PROPELLER/TRIM TAB/ANODE

1. Refer to “PERIODIC SERVICE” section in chapter 3.

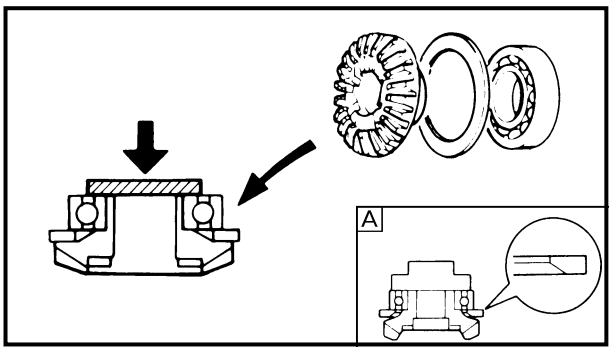

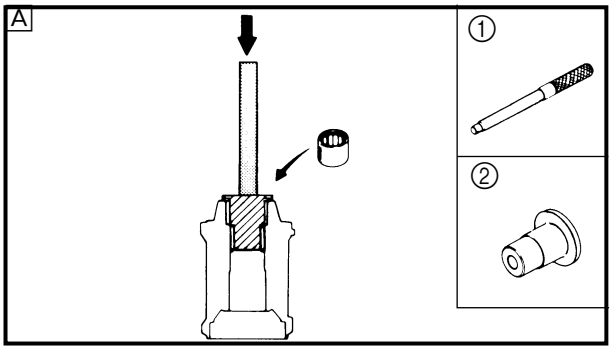

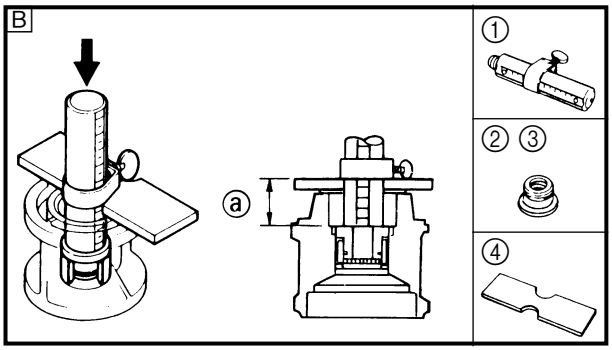

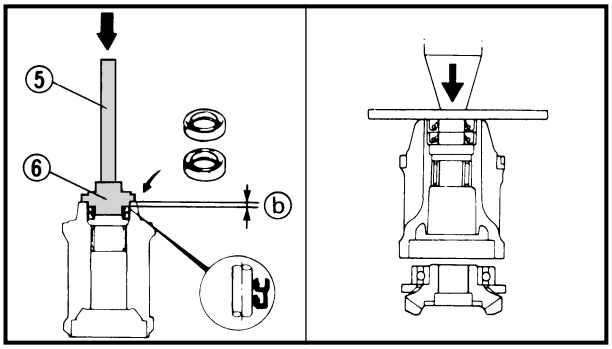

161009-0*

ASSEMBLY AND ADJUSTMENT

PROPELLER-SHAFT HOUSING

1. Install the thrust washer and press-fit a ball-bearing to the reverse gear.

A 50GETO

2. Install a needle-bearing and oil seals, and then press-fit the reverse gear complete into the bearing housing.

NOTE:

Install the needle bearing with its manufacture's marks or numbers facing outward.

Depth ⓐ:
50 hp : 20.7 mm (1.06 in)
60 ~ 90 hp: 25.5 mm (1.00 in)

Drive rod:
YB-6071/90890-06604 ..... ①
Needle bearing attachment:
50 hp: 90890-06614 ..... ②
60 ~ 90 hp:
YB-6152/90890-06611 ..... ③
Bearing depth plate:
90890-06603..... ④

A For USA and Canada
B Except for USA and Canada

Depth ⓑ:
5 mm (0.20 in)

Driver rod:
YB-6071..... ⑤
Oil seal attachment:
60 ~ 90 hp:
YB-6259 ..... ⑥

A

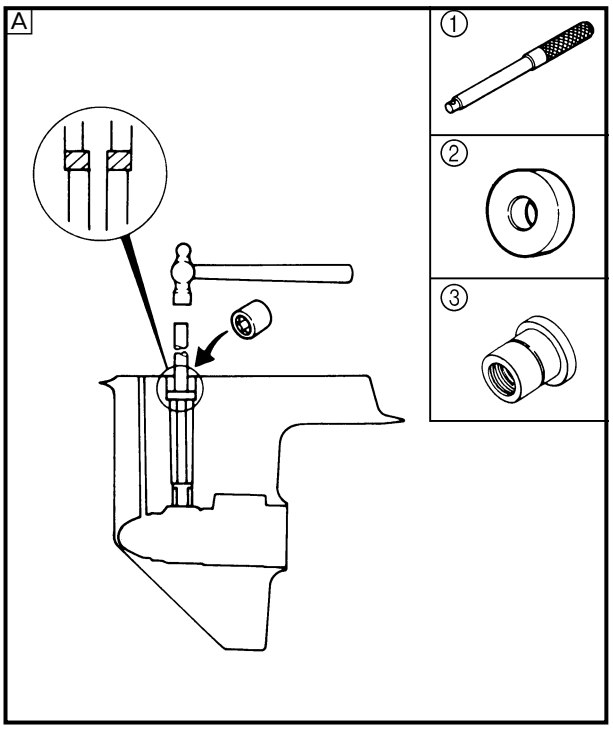

B

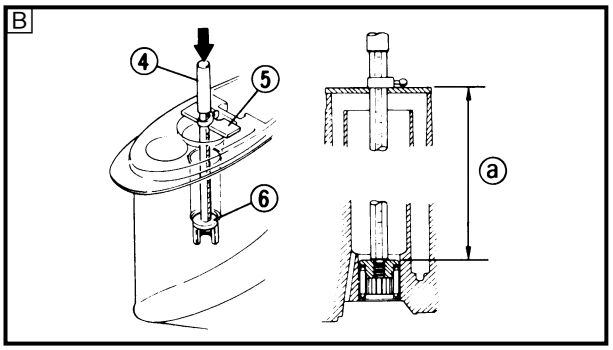

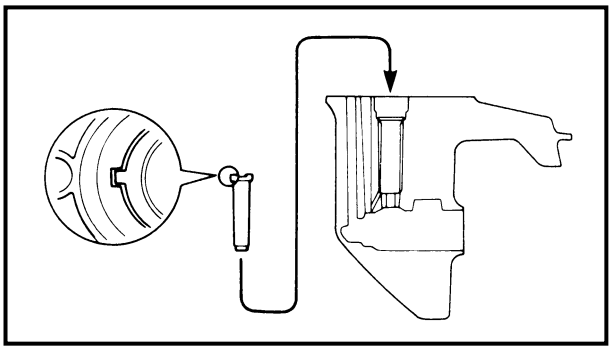

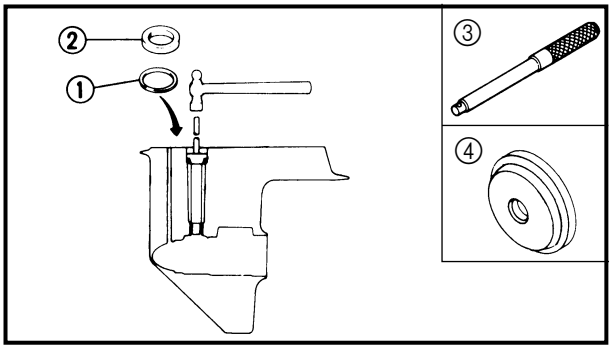

GEAR CASE

1. Install a new needle-bearing in position.

NOTE:

The needle bearing should be installed with the mark facing the flange side of attachment.

Driver rod:
YB-6071 ..... ①
Needle bearing depth stop:
YB-34473 ..... ②
Needle bearing attachment:
YB-6155 ..... ③
Driver rod:
90890-06602 ..... ④
Bearing depth plate:
90890-06603 ..... ⑤
Needle bearing attachment:
50 hp: 90890-06614 ..... ⑥
60 ~ 90 hp: 90890-06611 ..... ⑥

Depth ⓐ:
50 hp : 198.3 ~ 198.8 mm (7.81 ~ 7.83 in)
60 ~ 90 hp : 187.6 ~ 188.6 mm (7.39 ~ 7.43 in)

A For USA and Canada
B Except for USA and Canada

2. Align the drive-shaft sleeve locating-rib with the recess in the gear case and place the drive-shaft sleeve into the gear case.

3. Place the pinion-gear shim-pack ① in position and install the taper-roller bearing outer race ② on the shim-pack.

Drive rod:
YB-6071/90890-06606 ..... ③
Bearing outer race attachment:
50 hp: 90890-06627 ..... ④
60 ~ 90 hp:
YB-6156/90890-06626 ..... ④

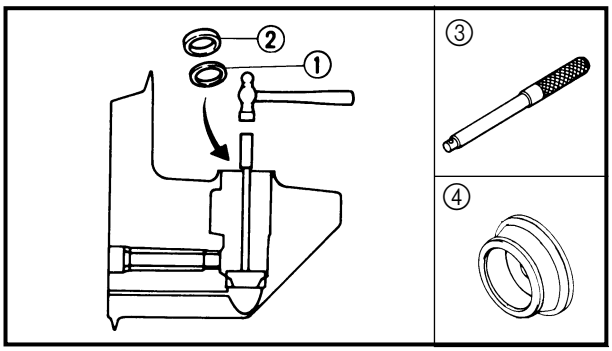

4. Place the forward-gear shim-pack ① in position and install the forward-gear outer race ② on the shim-pack.

Driver rod:
YB-6071/90890-06605 ..... ③
Bearing outer race attachment:
50 hp: 90890-06622 ..... ④
60 ~ 90 hp:
YB-6276B/90890-06621 ..... ④

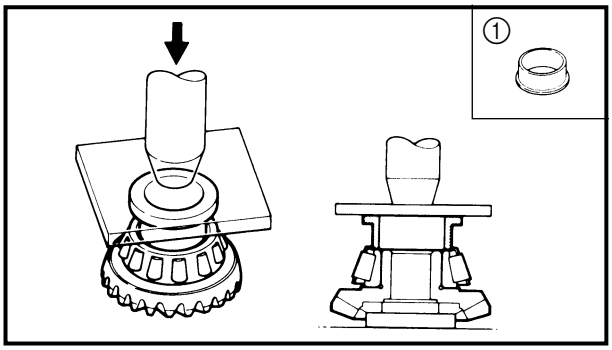

5. Install the bearing inner race to the forward-gear, then place the forward-gear complete onto the outer race.

Bearing inner race attachment:
50 hp: 90890-06640 ..... ①
60 ~ 90 hp: 90890-06662 ..... ①

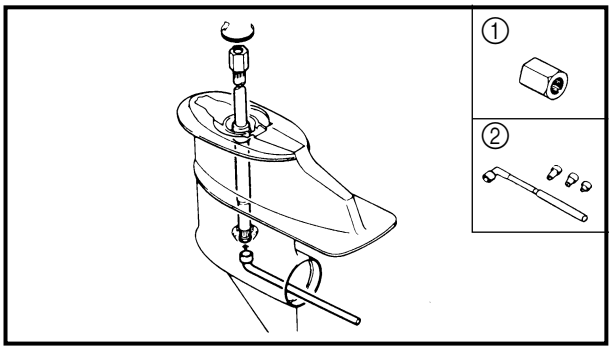

6. Place the drive-shaft in the gear case and insert it into the pinion.
Tighten the pinion nut to the specified torque.

Pinion nut:
50 hp:
75 Nm (7.5 m • kg, 54 ft • lb)
60 ~ 90 hp:
95 Nm (9.5 m • kg, 69 ft • lb)

Drive shaft holder:
50, 60, 70 hp:
YB-6049/90890-06518 ..... ①
75, 80, 90 hp:
YB-6151/90890-06519 ..... ①
Pinion nut holder:
90890-06505..... ②

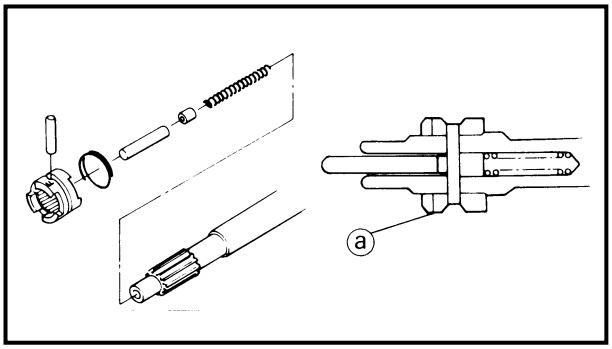

7. Assemble the propeller shaft.
(For 50GETO, C60ER, C60TR/60FET (Oceania), C75TR, 90AEHD, 90AED, C90TR/90AET)

1) Referring to the illustration.

ⓐ "F" mark side

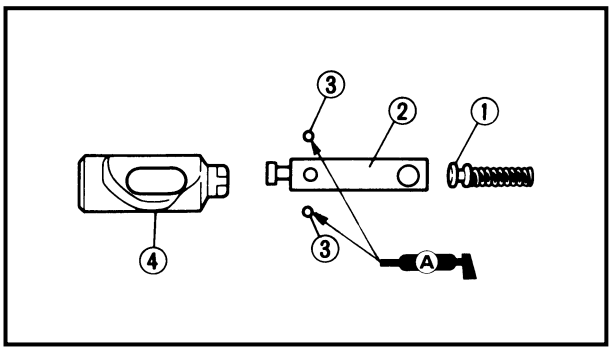

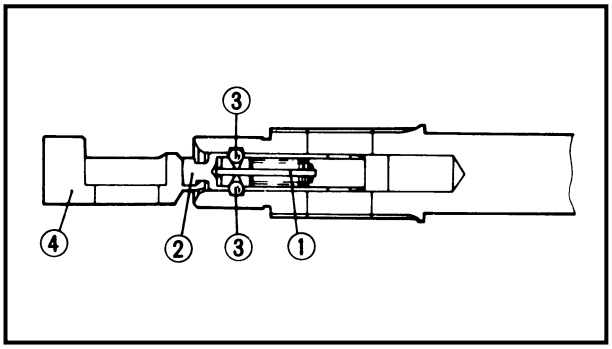

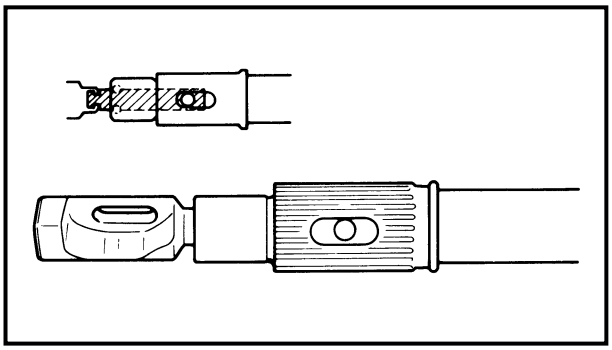

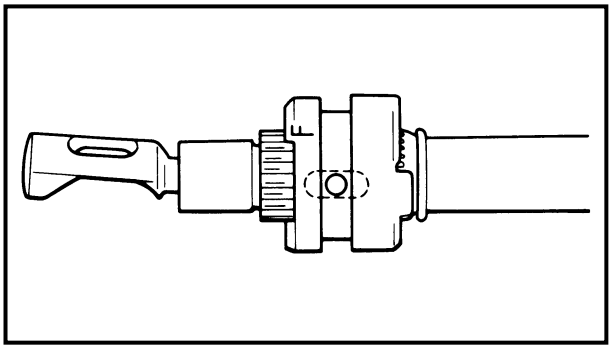

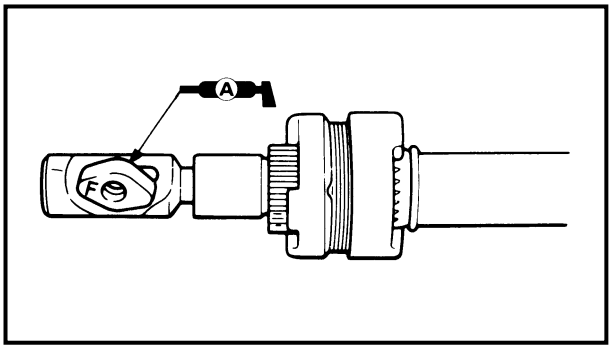

7. Assemble the propeller shaft.
   (Except for 50GETO, C60ER, C60TR/60FET (Oceania), C75TR, 90AEHD, 90AED, C90TR/90AET)
   1) Insert the free shaft ① into the shift slide ②.
   2) Insert the two balls ③ and shifter ④ on the shift slide.

NOTE:
Grease the balls so that they will not come off easily from the shift slide, thus making your work easier.

   3) Align the hole in the shift slide cross pin with the slot in the propeller shaft cross pin and insert the shift slide into the propeller shaft.
   4) Push the shifter and stop pushing it when the balls move into the neutral groove in the propeller shaft making a slick.
      If the balls move into the reverse groove passing the neutral, be sure to bring them back to neutral.
   5) Install the clutch dog so that its cross pin hole is aligned with the slot in the splined portion of the propeller shaft.

NOTE:
Install the clutch dog so that the "F" mark on the clutch dog is on the forward gear side.

   6) Bring the cross pin hole in the clutch dog with the hole in the shift slide and insert the cross pin into these holes. Then, install the cross pin ring.

   7) Place the shift cam on the shifter (with the "F" mark on the shift cam facing forward) and insert the propeller shaft into the forward gear.

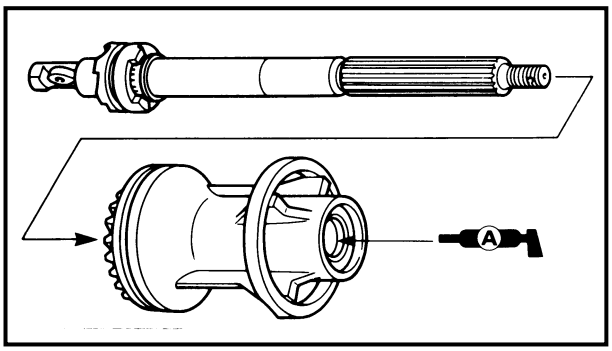

8. Grease the lips of the oil-seals and insert the propeller shaft complete into the bearing housing. Then, place the bearing housing complete to the gear case.

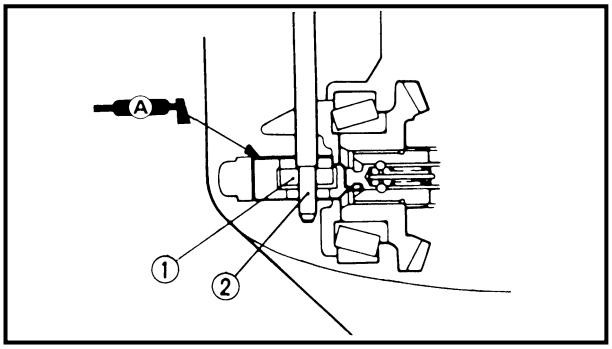

9. Look into the gear case through the hole and align the shift rod hole in the gear case with the splined hole in the shift cam ① and install the shift rod ②. (Except for 50GETO, C60ER, C60TR/60FET (Oceania), C75TR, 90AEHD, 90AED, C90TR/90AET)

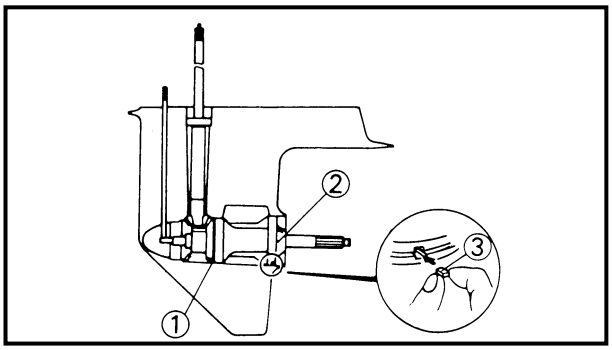

10. Place the reverse-gear shim ① in place, then install the bearing housing ② (aligning the key-way in the gear-case with that in the bearing housing) and insert the key ③.

11. Place a claw-washer in place, install a ring-nut (with its embossed marks facing outward away from the bearing housing), tighten the ring-nut to the specified torque and bend the claw-washer over the ring-nut to lock it.

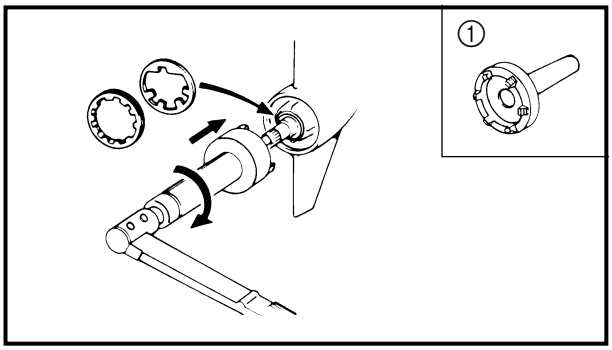



Ring-nut:
50 hp:
130 Nm (13.0 m • kg, 0.94 ft • lb)
60, 70, 75, 80, 90 hp:
145 Nm (14.5 m • kg, 105 ft • lb)



Ring nut wrench:
50 hp:
YB-06048/90890-06510
60 ~ 90 hp:
YB-34447 ..... ①
90890-06511 ..... ②
Extension (ring nut wrench):
90890-06513 ..... ③

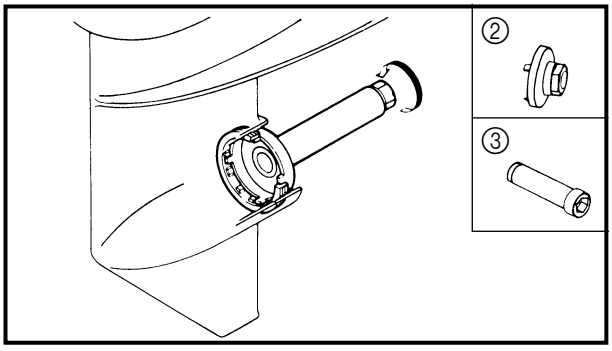

SHIM SELECTION

NOTE:

1. When reassembling the lower unit with the original gear case and inner parts, shim selection is not required.
2. When replacing the gear case only, read the numeral preceded by "**F**, **R**, **P**" and adjust the shims according to the difference between numerals of the original gear-case and the new gear-case.
3. If the bearing(s) and/or gear(s) are replaced, carry out the shim selection.

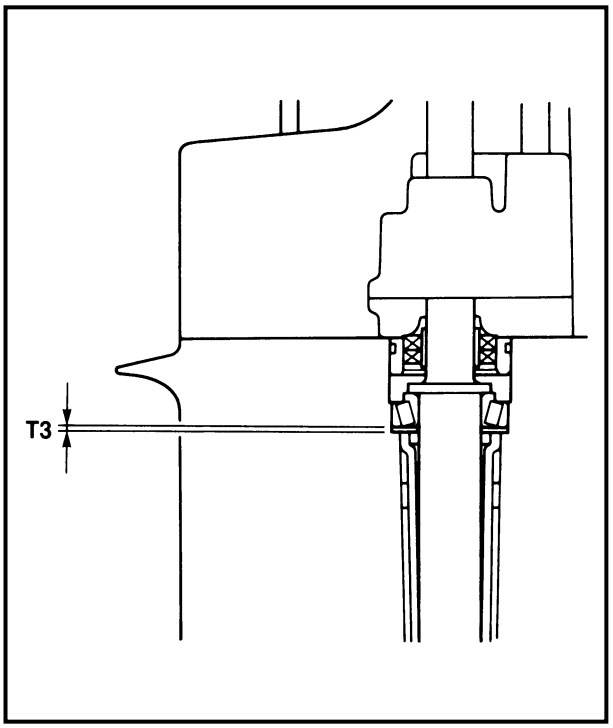

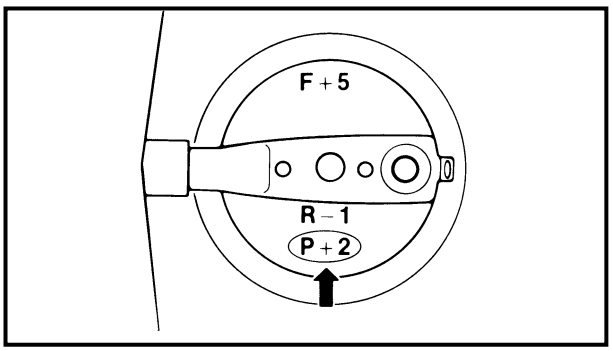

FOR USA AND CANADA
Pinion gear shim

NOTE:

Find pinion gear shim thickness (**T3**) by selecting shims until the specified measurement (**M**) with the special tool is obtained.

1. Find the specified measurement (M).

Specified Measurement (M) = 0.20 mm + P/100 mm

NOTE:

1. **P** is the deviation of the lower case dimension from standard. It is stamped on the trim tab mounting surface of the lower case in 0.01 mm units. If the **P** mark is missing or unreadable, assume a **P** mark of "0" and check the backlash when the unit is assembled.
2. If the **P** value is negative (–), then **subtract** the **P** value from the measurement.

Example:
If **P** mark is "+5", then
M = 0.20 + (+5)/100 mm
= 0.20 + 0.05 mm
= 0.25 mm
If **P** mark is "–3", then
M = 0.20 + (–3)/100 mm
= 0.20 – 0.03 mm
= 0.17 mm

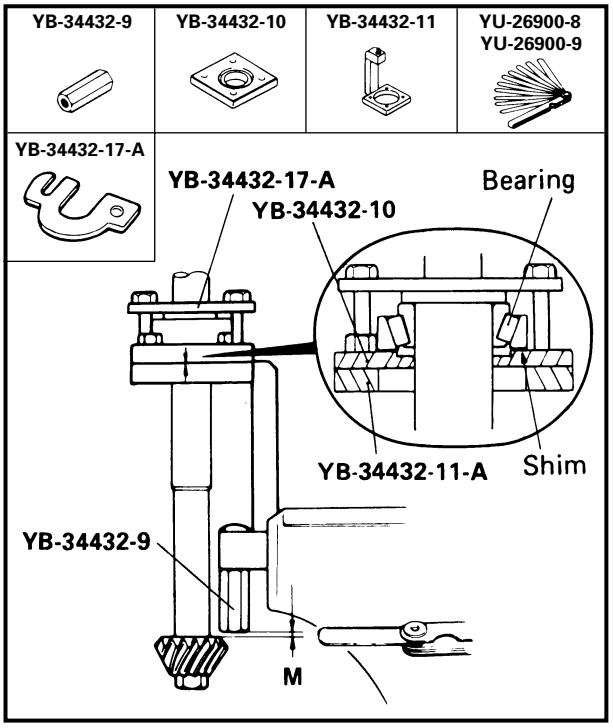

2. Assemble the shimming gauge with the drive shaft, bearing and shim(s) as shown in the illustration.

NOTE:
1. Attach the adapter plate to the gauge base using 4 bolts with appropriate sizes.
2. If the original shim(s) is unavailable, start with a 0.50 mm shim.

Gauge block:
YB-34432-9
Adapter plate:
YB-34432-10
Gauge base:
YB-34432-11-A
Clamp:
YB-34432-17-A

3. Install the pinion on the drive shaft and tighten the nut to the specified torque.
4. Using a thickness gauge at the specified measurement (**M**) established above, check the fit between the shimming gauge and lower surface of the pinion as shown.

Thickness gauge:
YU-26900-8
YU-26900-9

5. If the thickness gauge at the **M** specification will not fit, then remove or add the shim(s) until the thickness gauge just fits between the tool surfaces.

Available shim thickness:
0.10, 0.12, 0.15, 0.18, 0.30, 0.40 and 0.50 mm

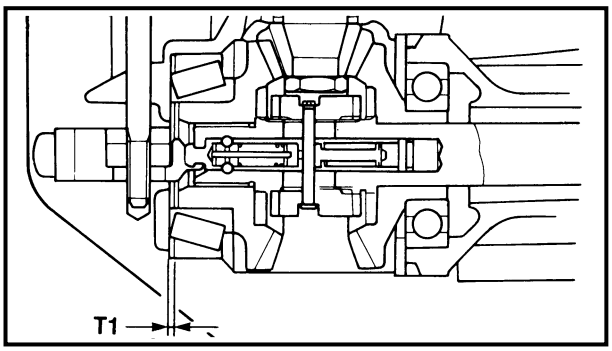

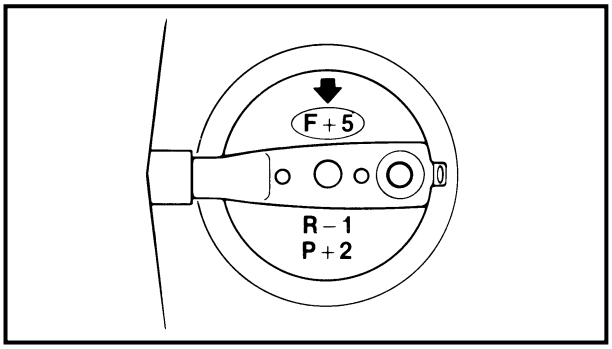

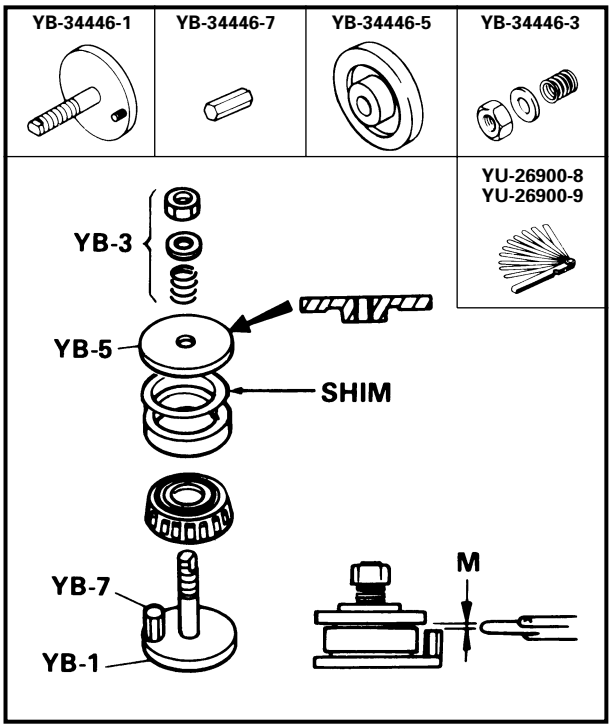

Forward gear shim

NOTE:

Find forward gear shim thickness (**T1**) by selecting shims until the specified measurement (**M**) with the special tool is obtained.

1. Find the specified measurement (M).

Specified Measurement (M) = 1.69 mm + F/100 mm

NOTE:

1. **F** is the deviation of the lower case dimension from standard. It is stamped on the trim tab mounting surface of the lower case in 0.01 mm units. If the **F** mark is missing or unreadable, assume an **F** mark of "0" and check the backlash when the unit is assembled.
2. If the **F** value is negative (–), then **subtract** the **F** value from the measurement.

Example:
If **F** mark is "+5", then
M = 1.69 + (+5)/100 mm
= 1.69 + 0.05 mm
= 1.74mm
If **F** mark is "–3", then
M = 1.69 + (–3)/100 mm
= 1.69 – 0.03 mm
= 1.66 mm

2. Assemble the shimming gauge with the forward bearing and original shim(s) as shown in the illustration. Tighten the nut four turns after contacting the spring.

NOTE:

If the original shim(s) is unavailable, start with a 0.50 mm shim.

Base plate:
YB-34446-1
Compression spring:
YB-34446-3
Press plate:
YB-34446-5
Gauge pin:
YB-34446-7

3. Using a thickness gauge at the specified measurement (**M**) established above, check the fit between the shimming gauge and upper disc of the tool.

Thickness gauge:
YU-26900-8
YU-26900-9

4. If the thickness gauge at the M specification will not fit, then remove or add the shim(s) until the thickness gauge just fits between the tool surfaces.

Available shim thicknesses:
0.10, 0.12, 0.15, 0.18, 0.30, 0.40 and 0.50 mm

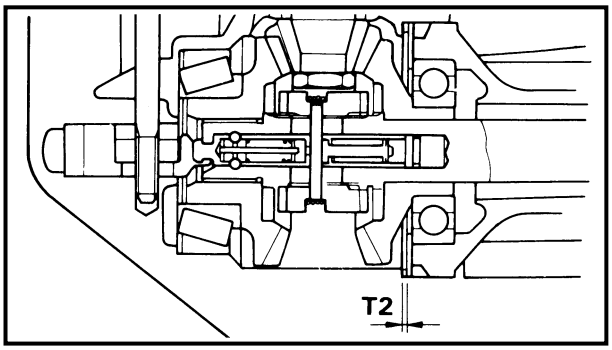

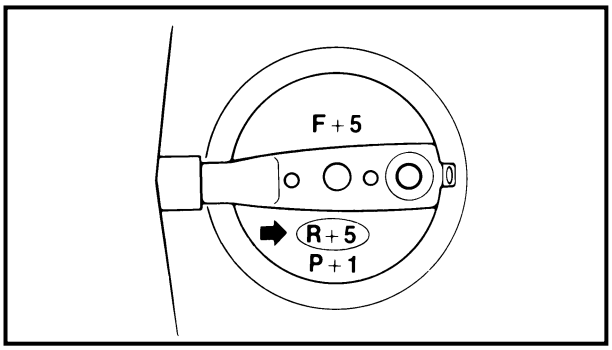

Reverse gear shim

NOTE:
Find the reverse gear shim thickness (**T2**) by selecting shims until the specified measurement (**M**) with the special tool is obtained.

1. Find the specified measurement (**M**).

Specified Measurement (M) =
60, 70 hp:
1.00 mm – R/100 mm
75, 90 hp:
1.50 mm – R/100 mm

NOTE:
1. **R** is the deviation of the lower case dimension from standard. It is stamped on the trim tab mounting surface of the lower case in 0.01 mm units. If the **R** mark is missing or unreadable, assume an **R** mark of "0" and check the backlash when the unit is assembled.
2. If the **R** value is negative(–), then **add** the **R** value to the measurement.

Example: (60, 70 hp)
If **R** mark is "+5", then
M = 1.00 – (+5)/100 mm
= 1.00 – 0.05 mm
= 0.95 mm
If **R** mark is "–3", then
M = 1.00 – (–3)/100 mm
= 1.00 + 0.03 mm
= 1.03 mm

Example: (75, 90 hp)
If **R** mark is "+5", then
M =1.50 – (+5)/100 mm
=1.50 – 0.05 mm
=0.45 mm
If **R** mark is "–3", then
M =1.50 – (–3)/100 mm
=1.50 + 0.03 mm
=1.53 mm

2. Place the original shim(s) on the thrust washer mounted on the bearing housing and place the shimming gauge on top of the shim(s) as shown in the illustration.

NOTE:
1. If the original shim(s) is unavailable, start with a 0.50 mm shim.
2. Be sure to remove the O-ring from under the thrust washer.

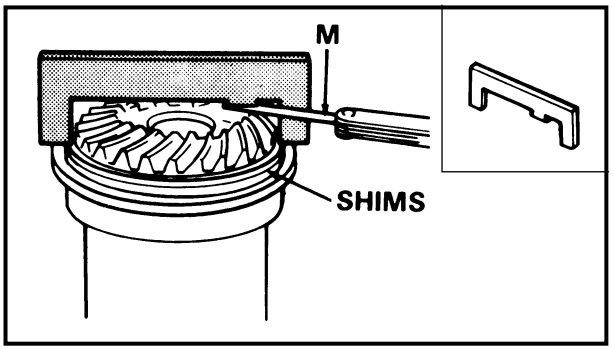



Shimming gauge:
YB-34468-5 (60, 70 hp)
YB-34468-3 (75, 90 hp)

3. Using a thickness gauge at the specified measurement (**M**) established above, check the fit between the shimming gauge and the reverse gear. Force the shimming gauge against the shims and thrust washer when checking the fit.



Thickness gauge:
YU-26900-8
YU-26900-9

4. If the thickness gauge at the **M** specification will not fit, then remove or add the shim(s) until the thickness gauge just fits between the tool surfaces.



Available shim thickness:
0.10, 0.12, 0.15, 0.18, 0.30, 0.40 and 0.50 mm

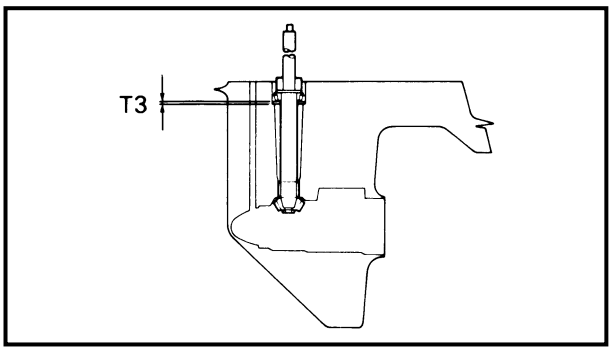

EXCEPT FOR USA AND CANADA

Pinion gear shim

1. Find pinion gear shim thickness (**T3**) by selecting shims until the specified measurement (**M**) with the special tool is obtained.

2. Install the pinion on the drive shaft and tighten the nut to the specified torque.

Pinion nut:
50 hp:
75 Nm (7.5 m • kg, 54 ft • lb)
60 ~ 90 hp:
95 Nm (9.5 m • kg, 69 ft • lb)

3. Assemble the pinion height gauge with the drive shaft and bearing as shown in the illustration. Bolt the bearing housing to the special tool with at least two bolts.

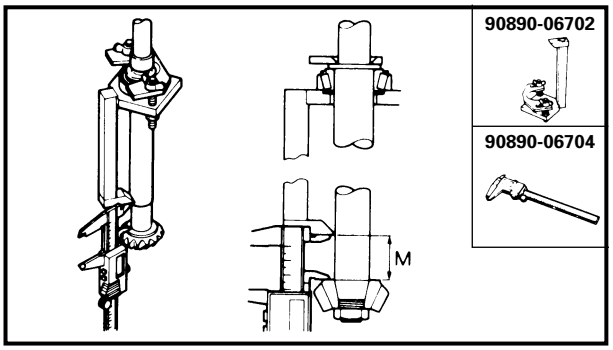

Pinion height gauge:
90890-06702
Digital caliper:
90890-06704

4. Using a digital caliper at the specified measurement (**M**) established above, measure the distance between the pinion height gauge and lower surface of the pinion as shown.

Shim thickness (T3)=
50 hp:
M – 40.2 mm – P/100 mm
60 ~ 90 hp:
M – 31.5 mm – P/100 mm

5. **P** is the deviation of the lower case dimension from standard. It is stamped on the trim tab mounting surface of the lower case in 0.01 mm units. If the **P** mark is missing or unreadable, assume a **P** mark of "0" and check the backlash when the unit is assembled.

Example:
If **M** is "32.10 mm" **P** is "+2", then
T3 = 32.10 – 31.5 – 2/100 = 0.58

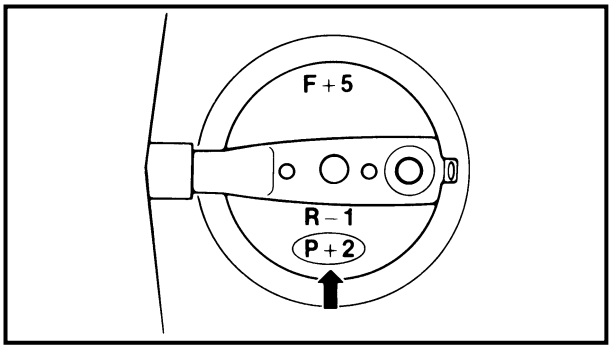

Available shim thickness:
0.10, 0.12, 0.15, 0.18, 0.30, 0.40 and 0.50 mm

SHIM SELECTION (EXCEPT FOR USA AND CANADA)

NOTE:

- Use a minimum number of shims to obtain the thickness equal or nearly equal to the calculation.
- Install the shims with the thicker one on the outer side.

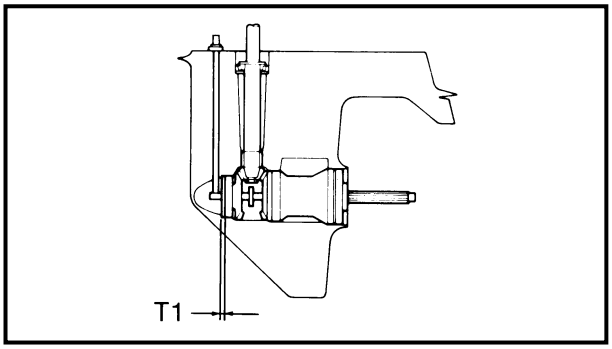

Forward gear shim

1. Find forward gear shim thickness (**T1**) by selecting shims until the specified measurement (**M**) with the special tool is obtained.

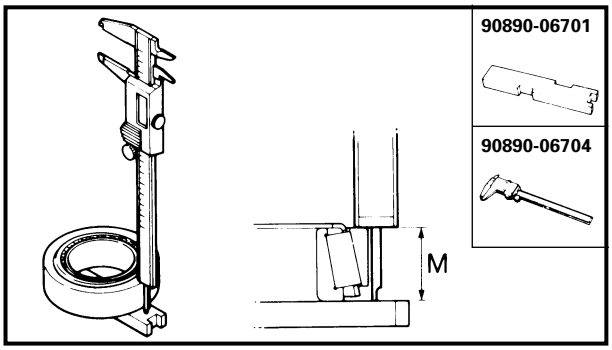

2. Using a digital caliper at the specified measurement (**M**) established above, measure the bearing height.

Shim thickness (T1)=
50 hp:
22.70 mm + F/100 mm – M
60 ~ 90 hp:
24.50 mm + F/100 mm – M

Shimming plate:
90890-06701
Digital caliper:
90890-06704

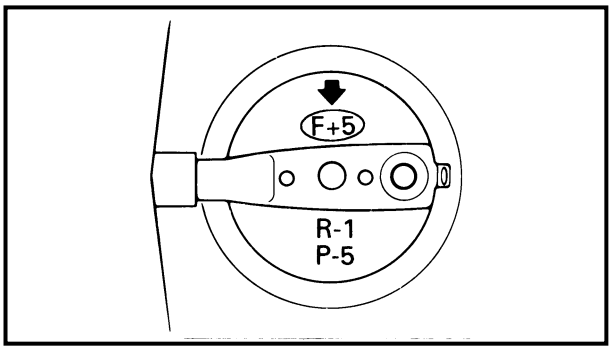

3. **F** is the deviation of the lower case dimension from standard. It is stamped on the trim tab mounting surface of the lower case in 0.01 mm units. If the **F** mark is missing or unreadable, assume an **F** mark of "0" and check the backlash when the unit is assembled.

Example:

If **M** is "23.90 mm" **F** is "+5", then
T1 = 24.50 + 5/100 – 23.90 = 0.65

Available shim thickness:
0.10, 0.12, 0.15, 0.18, 0.30, 0.40 and 0.50 mm

NOTE:
- Use a minimum number of shims to obtain the thickness equal or nearly equal to the calculation.
- Install the shims with the thicker one on the outer side.

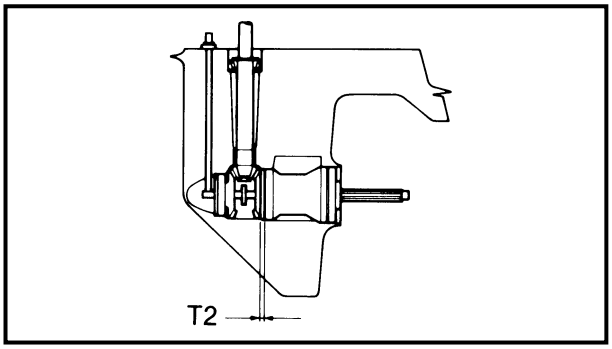

Reverse gear shim

1. Find reverse gear shim thickness (**T2**) by selecting shims until the specified measurement (**M**) with the special tool is obtained.

NOTE:
Be sure to remove the O-ring from under the thrust washer.

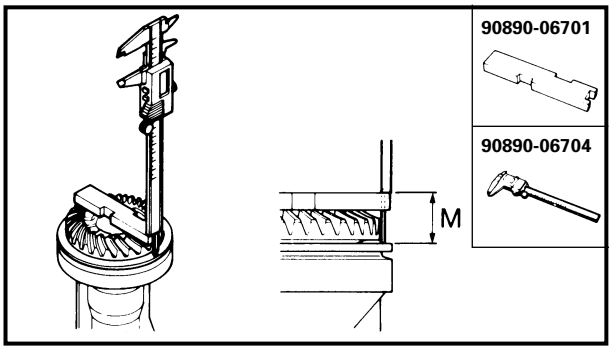

2. Using a digital caliper at the specified measurement (**M**) established above, measure the distance between the washer top and special tool top as shown.

Shim thickness (T2)=
50 hp:
M – 25.40 mm – R/100 mm
60, 70 hp
M – 28.00 mm – R/100 mm
75 ~ 90 hp:
M – 26.00 mm – R/100 mm

Shimming plate:
90890-06701
Digital caliper:
90890-06704

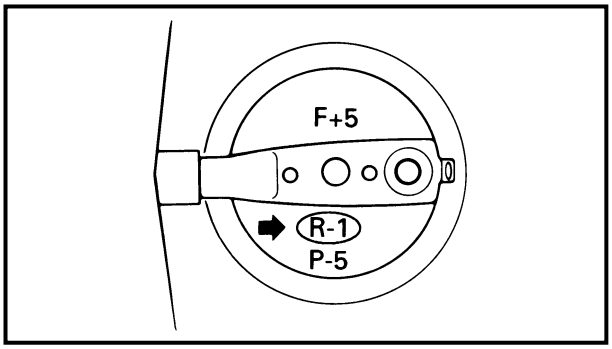

3. **R** is the deviation of the lower case dimension from standard. It is stamped on the trim tab mounting surface of the lower case in 0.01 mm units. If the **R** mark is missing or unreadable, assume an **R** mark of "0" and check the backlash when the unit is assembled.

Example:
If **M** is "28.60 mm" **R** is "–1", then
T2 = 28.60 – 28.00 + 1/100 = 0.61

Available shim thickness:
0.10, 0.12, 0.15, 0.18, 0.30, 0.40 and 0.50 mm

NOTE:
- Use a minimum number of shims to obtain the thickness equal or nearly equal to the calculation.
- Install the shims with the thicker one on the outer side.

163015-0*

MEASURING THE BACKLASH

NOTE:
- Do not install the water pump components when measuring the backlash.
- Both forward and reverse gear backlashes should be measured.
- If both the forward and reverse gear backlashes are larger than specified, the pinion may be too high.
- If both forward and reverse gear backlashes are smaller than specified, the pinion may be too low.
- If either of these conditions exists, then check the pinion shim selection.

1. Place the shift rod in neutral.
2. Install a dial gauge on the gear case.
3. Install a backlash indicator gauge (special service tool) on the drive shaft (50, 60, 70 hp: 18 mm in diameter, 75, 80, 90 hp: 20 mm in diameter) and make the dial gauge stem contact the mark on the indicator gauge.

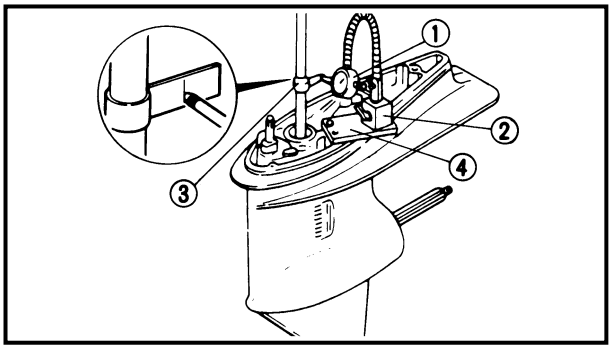

Dial gauge:
YU-3097/90890-01252..... ①
Magnet base:
YU-34481/90890-06705..... ②
Backlash indicator:
YB-6265/90890-06706..... ③
Backlash adjusting plate:
YB-7003..... ④

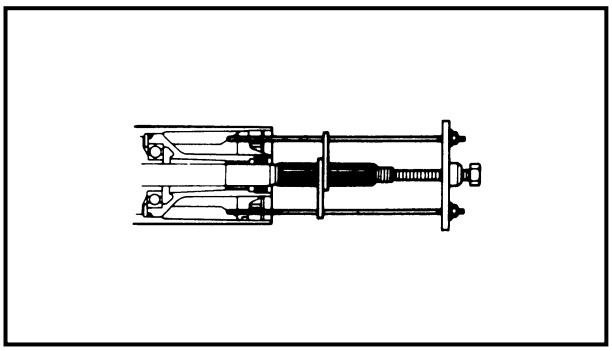

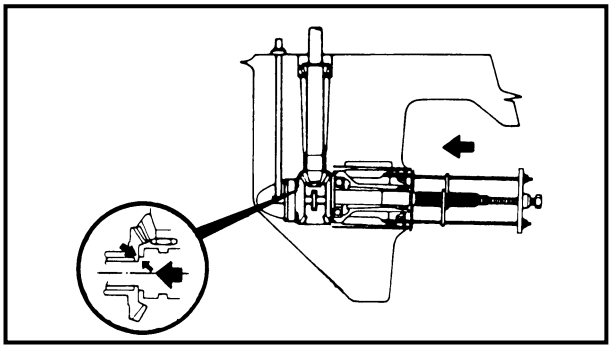

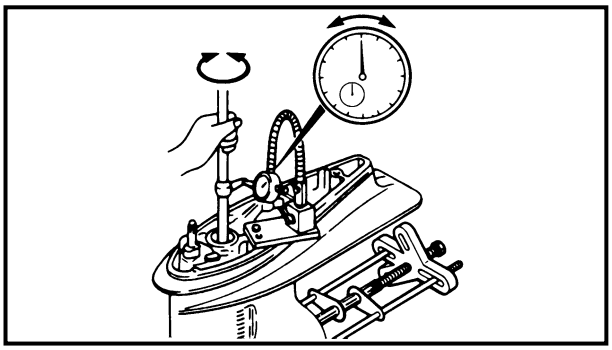

Forward gear

1. Install a bearing housing puller (special service tool) in the bearing housing so that it engages with the center bolt of the propeller shaft.

NOTE:

Tighten the center bolt while turning the propeller shaft a few times clockwise.

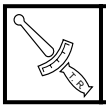

Center bolt:
5 Nm (0.5 m • kg, 3.6 ft • lb)



Claw:
YB-6207/90890-06503
50, 60, 70 hp:
90890-06502
Universal puller:
YB-6117
Stopper guide plate:
90890-06501
Center bolt:
90890-06504

2. Slowly turn the drive shaft in and out and read the dial gauge when the drive shaft stops in each direction.

3. Determine the shim size according to the chart.

50, 75, 80, 90 hp:

Forward gear backlash	Decrease or increase
Less than 0.08 mm (0.003 in)	Thickness of shim to be decreased (mm) = (0.17 – measurement) × 0.60
0.08 – 0.25 mm (0.003 – 0.009 in)	Decrease or increase will be unnecessary
More than 0.25 mm (0.009 in)	Thickness of shim to be increased (mm) = (measurement – 0.17) × 0.60

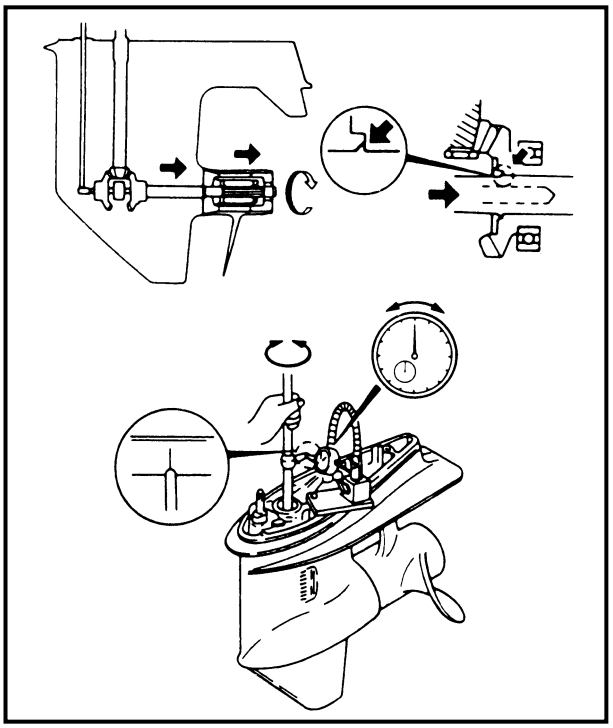

60, 70 hp:

Forward gear backlash	Decrease or increase
Less than 0.09 mm (0.004 in)	Thickness of shim to be decreased (mm) = (0.19 – measurement) × 0.53
0.09 – 0.28 mm (0.004 – 0.011 in)	Decrease or increase will be unnecessary
More than 0.28 mm (0.011 in)	Thickness of shim to be increased (mm) = (measurement – 0.19) × 0.53

Reverse gear

1. Install a propeller on the propeller shaft, with the front facing backward, fit the nut and tighten.

	Nut (propeller): 5 Nm (0.5 m • kg, 3.6 ft • lb)

2. Slowly turn the drive shaft in and out and read the dial gauge when the drive shaft stops in each direction.
3. Determine the shim size according to the chart.

50 hp:

Reverse gear backlash	Decrease or increase
Less than 0.84 mm (0.033 in)	Thickness of shim to be increased (mm) = (1.01 – measurement) × 0.60
0.84 – 1.17 mm (0.033 – 0.046 in)	Decrease or increase will be unnecessary
More than 1.17 mm (0.046 in)	Thickness of shim to be decreased (mm) = (measurement – 1.01) × 0.60

60, 70 hp:

Reverse gear backlash	Decrease or increase
Less than 0.75 mm (0.033 in)	Thickness of shim to be increased (mm) = (0.94 – measurement) × 0.53
0.75 – 1.13 mm (0.033 – 0.044 in)	Decrease or increase will be unnecessary
More than 1.13 mm (0.044 in)	Thickness of shim to be decreased (mm) = (measurement – 0.94) × 0.53

75, 80, 90 hp:

Reverse gear backlash	Decrease or increase
Less than 0.67 mm (0.026 in)	Thickness of shim to be increased (mm) = (0.84 – measurement) × 0.60
0.67 – 1.00 mm (0.026 – 0.039 in)	Decrease or increase will be unnecessary
More than 1.00 mm (0.039 in)	Thickness of shim to be decreased (mm) = (measurement – 0.84) × 0.60

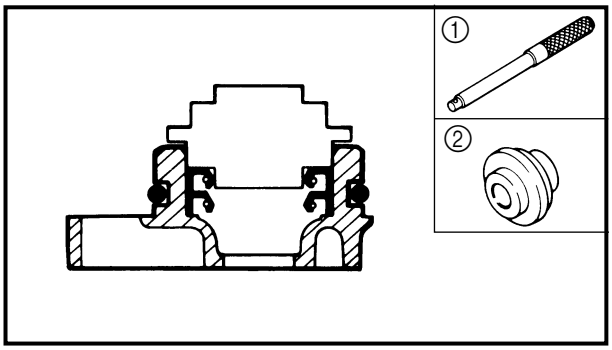

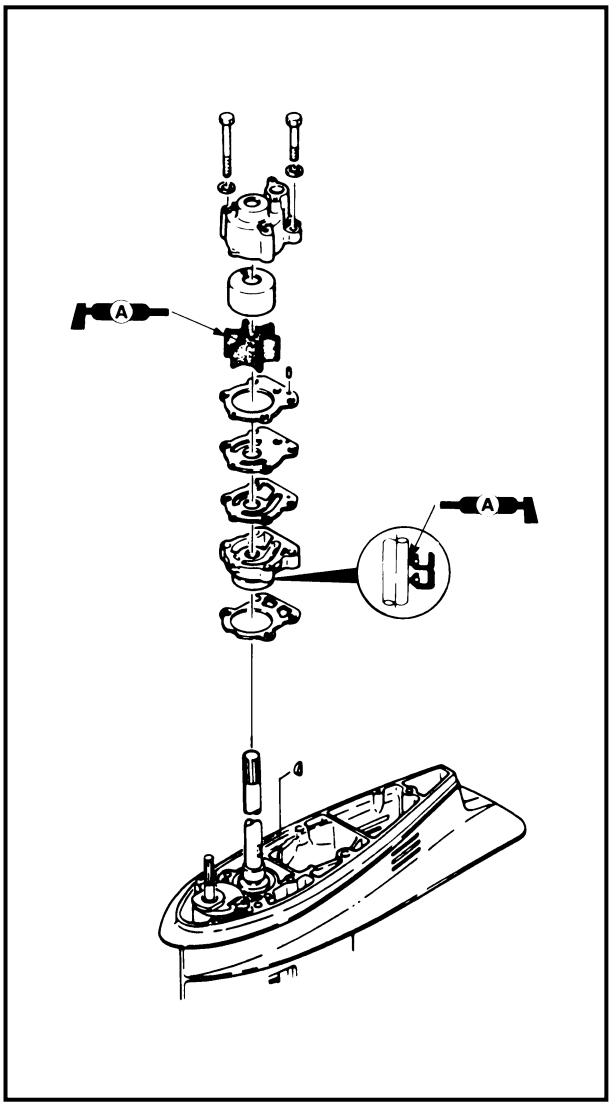

164000-0

WATER PUMP INSTALLATION

1. Install a new oil seal in the oil-seal housing, and fit a new O-ring in the O-ring groove.



Driver rod:
YB-6071 ..... ①
Oil seal attachment:
YB-6269 ..... ②

2. Grease the O-ring and the lip of the oil-seal, then install the oil-seal housing complete to the gear-case and fit the dowel-pins.
3. Aligning with the dowel-pins, install a new gasket, a plate and a new gasket on the oil-seal housing.
4. Install a key in the keyway on the drive-shaft and insert a impeller.
5. Grease the impeller and install the water-pump housing, turning the drive shaft clockwise, then tighten the bolts.

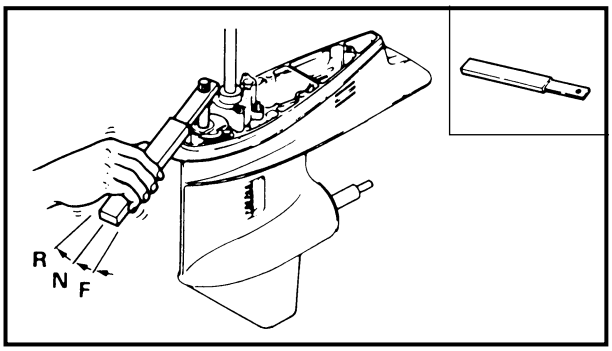

170003-0*

INSTALLATION

1. Check that the clutch dog shifts to "Forward", "Neutral" and "Reverse" correctly by turning the shift rod, and shift into "Neutral".

	**Shift rod wrench:** **YB-6052**

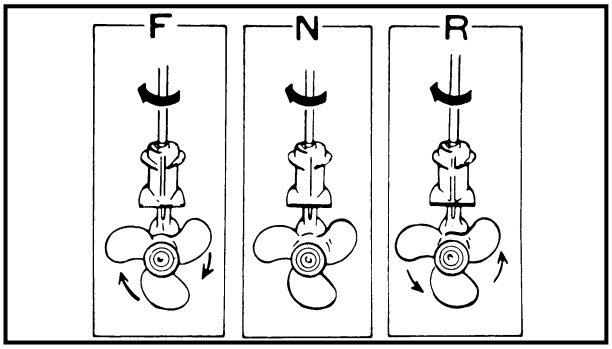

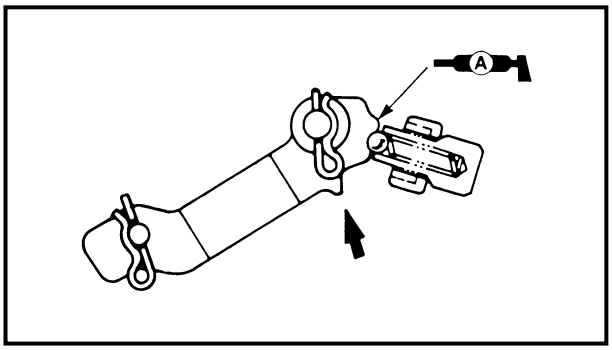

2. Align the mark on the shift lever with the arrow mark on the bottom cowling.

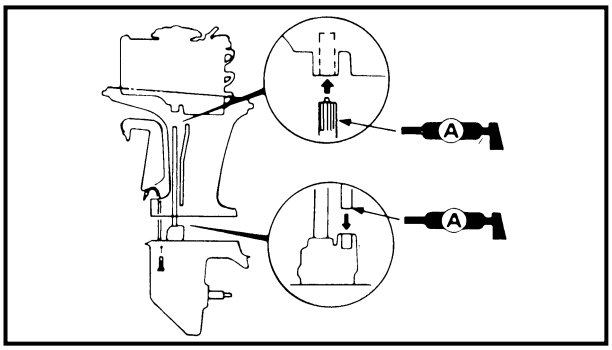

3. Grease the spline of the drive-shaft and the water-tube outer face, align the water-tube and drive-shaft, install the lower unit and tighten the bolts to the specified torque.

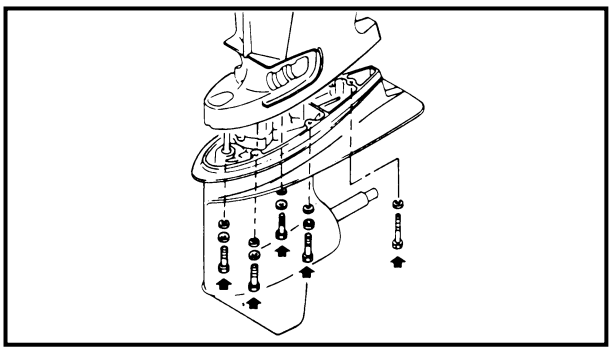

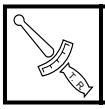	**Lower unit mounting bolts:** **40 Nm (4.0 m • kg, 29 ft • lb)**

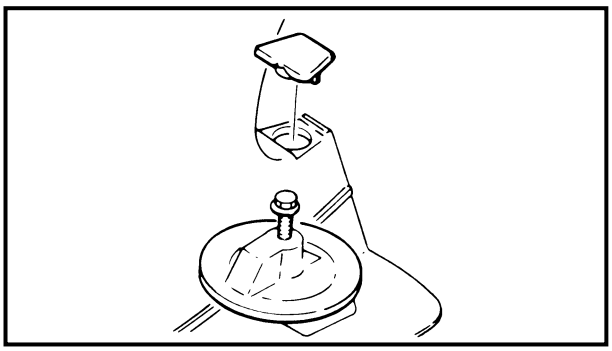

4. Install the trim tab on the gear case. Be sure to align the marks put on both of them when they were removed. Place the cap over the bolt hole.

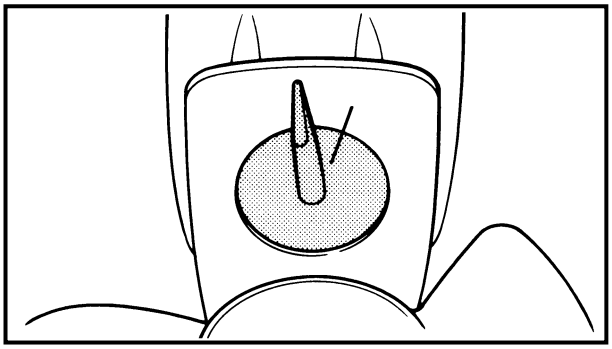

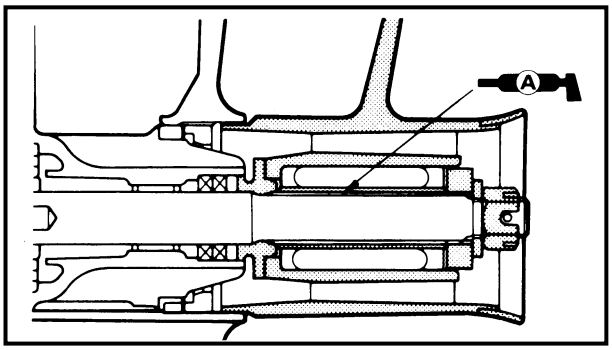

5. Install the spacers, propeller, washer, and propeller nut over the propeller shaft.

	Propeller nut: **35 Nm (3.5 m • kg, 25 ft • lb)**

6. Align the recess in the propeller nut with the hole in the propeller shaft and insert the cotter pin into the hole. Be sure to bend the cotter pin ends.

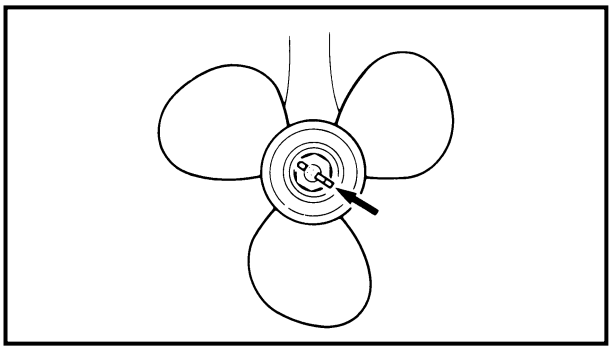

NOTE:

If the propeller nut does not align with the propeller shaft hole when the nut is tightened to specification, turn it in further so that they align.

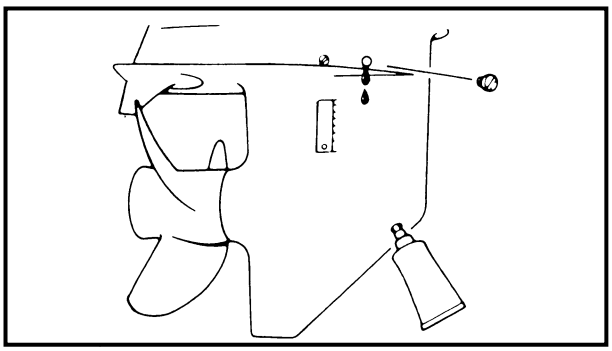

7. Fill with fresh gear oil through the oil plug-hole until oil flows out through the level-plug hole, then secure the plugs in these two holes. (Secure the check plug first.)

A

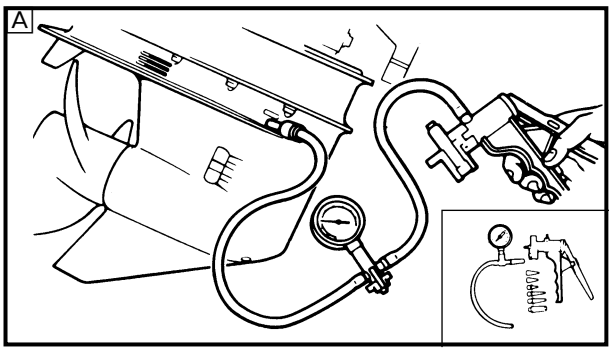

B

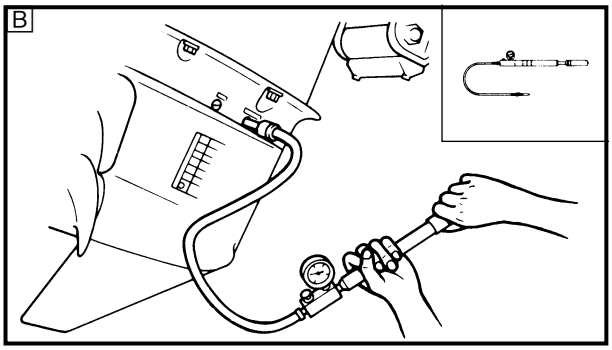

165000-0

LOWER UNIT LEAKAGE CHECK

1. Tighten the gear oil-drain screw and connect the tester to the oil-level hole.
2. Pump the tester, and apply a pressure of 100 kPa (1.0 kg/cm^2, 14.2 psi). Then, place the gear case in the water tank.
3. Check that the pressure is held at 100 kPa (1.0 kg/cm^2, 14.2 psi) for 10 seconds.

CAUTION:

Do not overpressurize.

NOTE:

If the pressure falls, leakage from the lower unit is unacceptable, requiring re-inspection of its component parts.



Pressure tester:
YB-35956/90890-06762

A For USA and Canada
B Except for USA and Canada

CHAPTER 7
BRACKET UNIT

BRACKET UNIT 7-1
EXPLODED DIAGRAM 7-1
MANUAL HANDLE 7-1
UPPER CASING 7-2
BOTTOM COWLING 7-4
BRACKET UNIT 7-5
BRACKET UNIT (Manual tilt model) 7-6
BRACKET (Short transom) 7-7
BRACKET (Long transom) 7-8
REMOVAL 7-9
DISASSEMBLY 7-9
INSPECTION 7-9
ANODE 7-9
BRACKET 7-9
TRIM SENSOR 7-9
ASSEMBLY 7-10

HYDRAULIC TILT UNIT 7-11
INSPECTION 7-11

POWER TRIM AND TILT UNIT 7-11
REMOVAL 7-11
EXPLODED DIAGRAM (Short transom [6H308]) 7-12
DISASSEMBLY 7-14
INSPECTION 7-16
TILT-ROD AND TRIM-ROD 7-16
ASSEMBLY 7-16
EXPLODED DIAGRAM (Long transom [6H1-15], [62F-02]) 7-20
DISASSEMBLY 7-22
INSPECTION 7-24
TILT-ROD AND TRIM-ROD 7-24
ASSEMBLY 7-24
FILLING WITH HYDRAULIC FLUID AND AIR-BLEEDING 7-28
HYDRAULIC FLUID PRESSURE TEST 7-28
INSTALLATION 7-30

POWER TRIM AND TILT MOTOR 7-31
DISASSEMBLY 7-31
INSPECTION 7-31
ARMATURE COIL 7-31
BRUSH 7-32
BASE ASSEMBLY 7-32
CIRCUIT BREAKER 7-32
ASSEMBLY 7-33

BRACKET UNIT

EXPLODED DIAGRAM

MANUAL HANDLE

P60TH/60FEHTO*1, P75TH/75CEHTO, 90AEHD*2

① Steering handle
② Bracket
③ Main switch
④ Engine stop switch
⑤ Throttle cable
⑥ Link assembly
⑦ Shift cable
⑧ Cover
⑨ Grip
⑩ Battery cable
⑪ Main switch lead
⑫ Extension wire lead
⑬ PTT switch (PTT model)
⑭ Steering friction (PTT model)

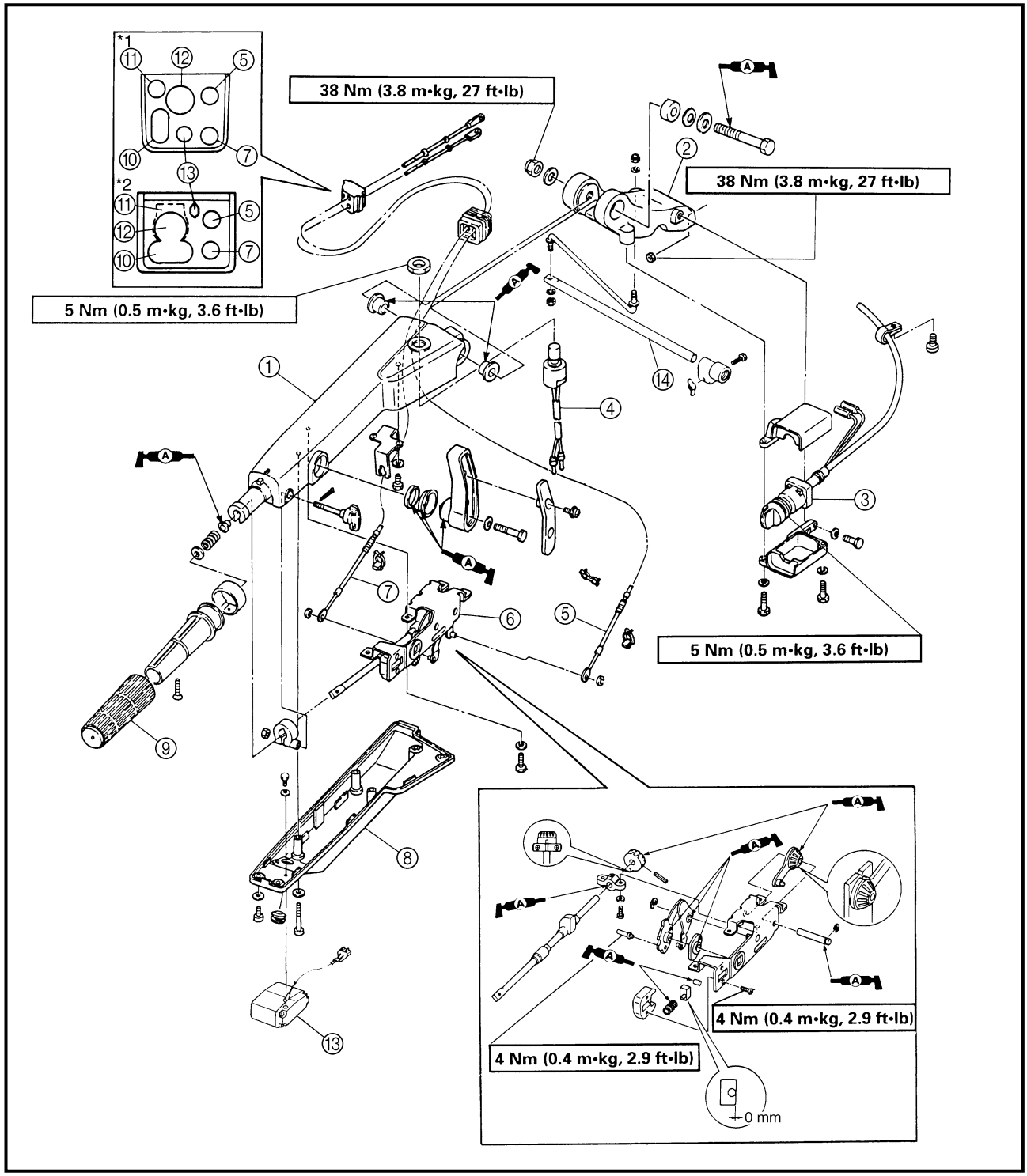

K15000-0

UPPER CASING
50, 60, 70 hp

① Exhaust guide
② Exhaust manifold
③ Muffler
④ Upper case
⑤ Apron
⑥ Seal
⑦ Bottom cowling

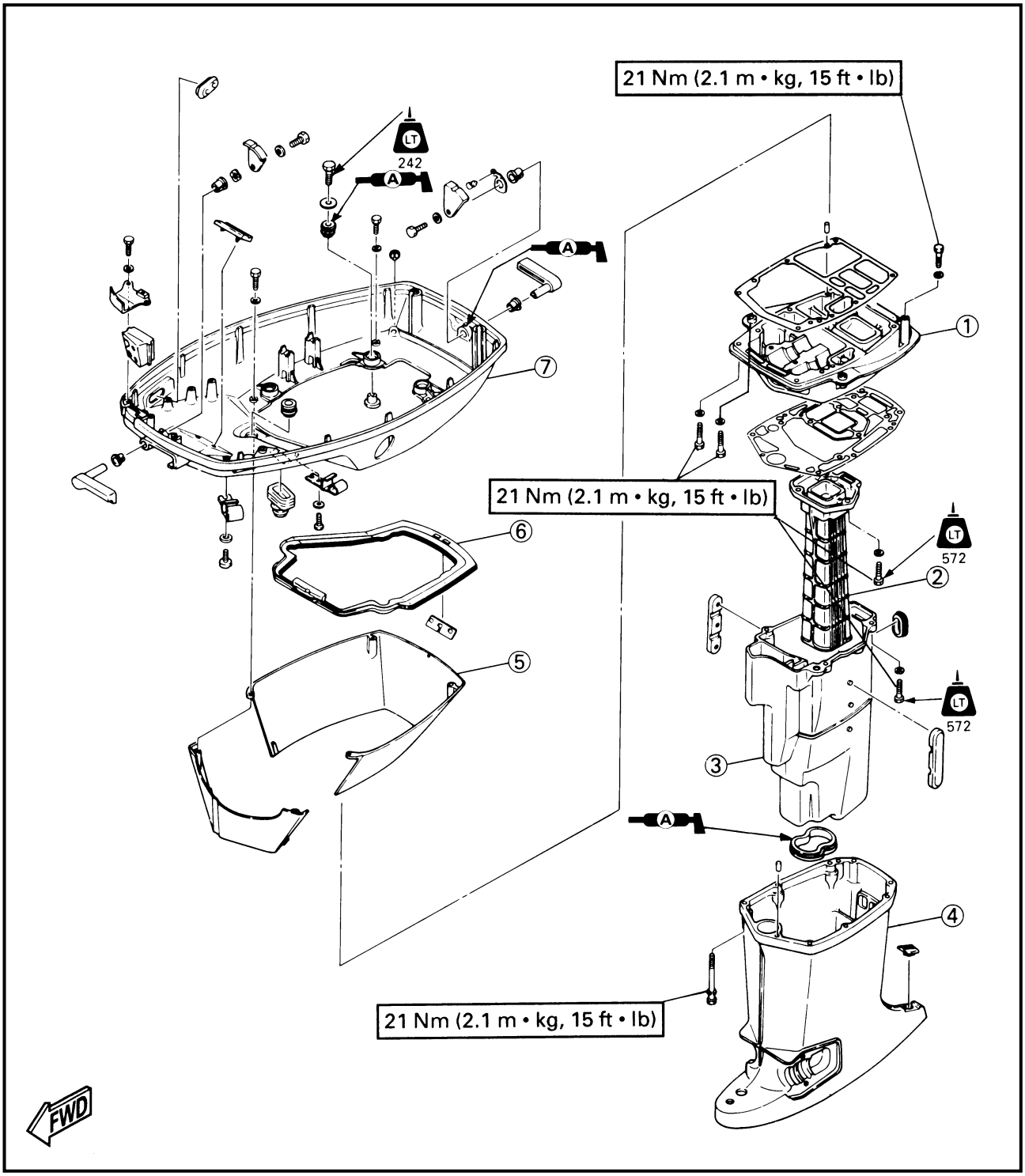

75, 80, 90 hp

① Exhaust guide
② Exhaust manifold
③ Muffler
④ Upper case
⑤ Apron
⑥ Seal
⑦ Bottom cowling

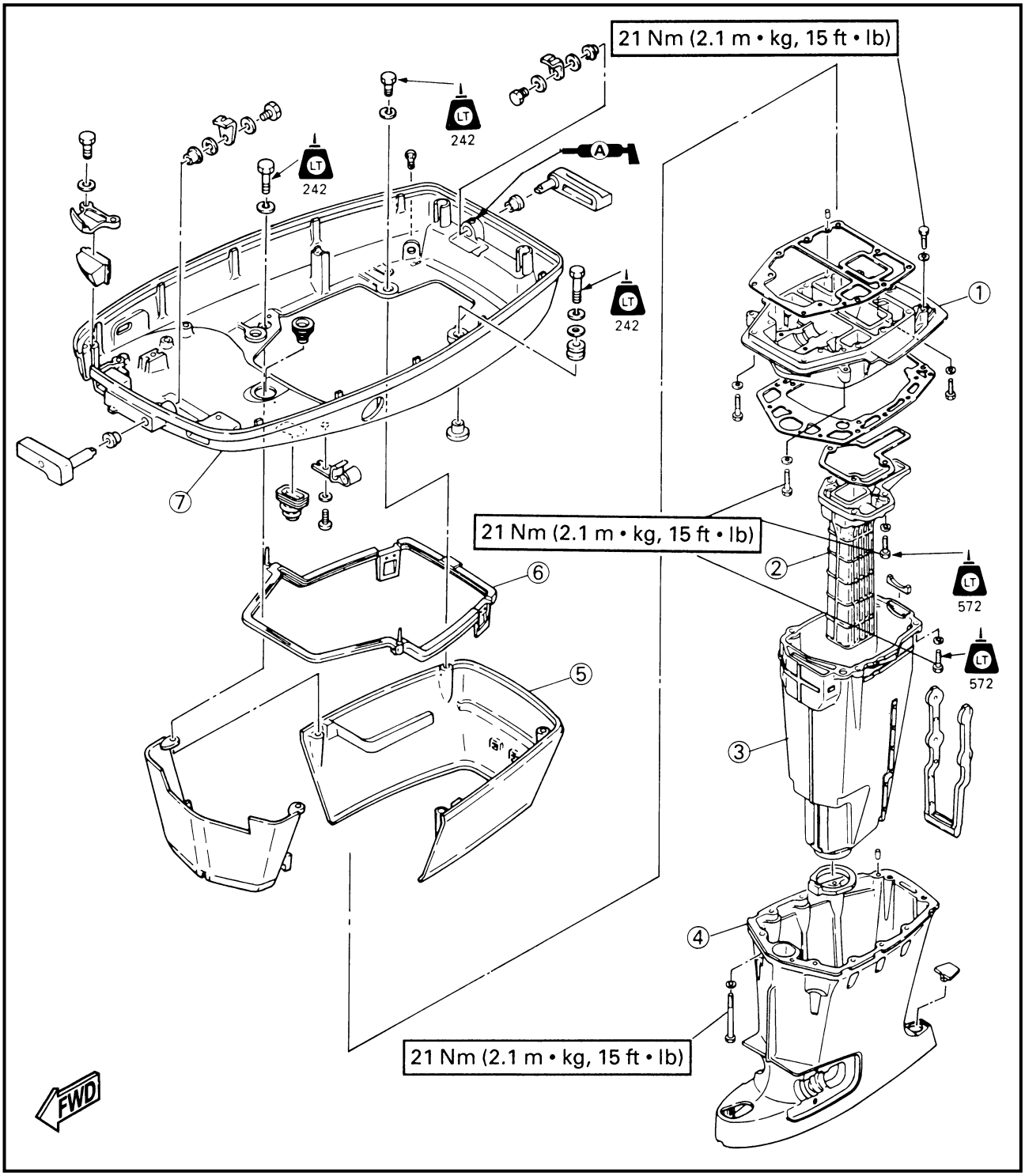

K-15300-0

BOTTOM COWLING

① Power trim and tilt motor lead (PTT model)
② Trim sender lead (PTT model)
③ Grommet
④ Flushing kit (B90TR/90AETO)
⑤ Clamp (PTT model)
⑥ Bottom cowling fitting plate
⑦ Shift actuator

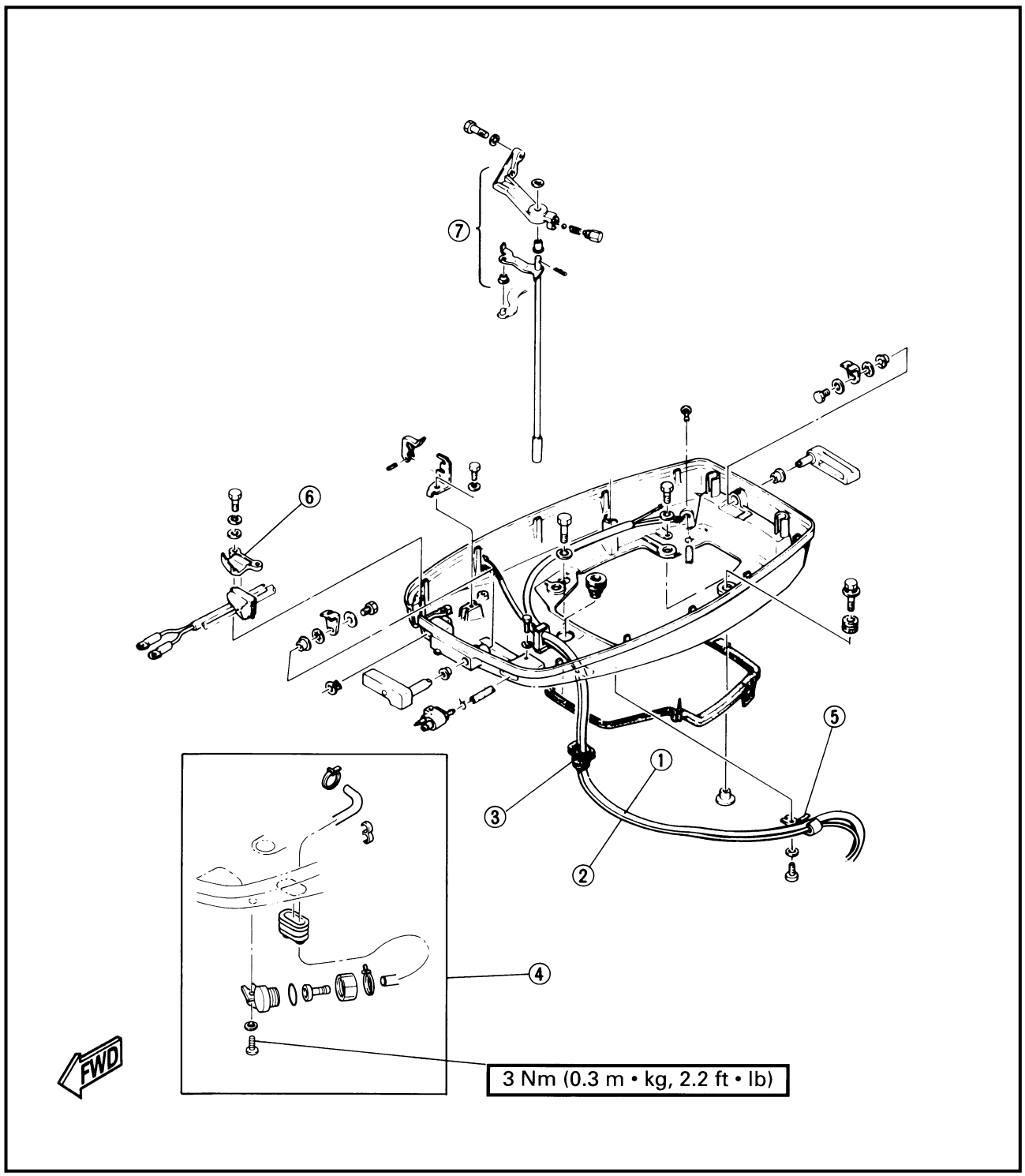

K-15600-0

BRACKET UNIT

① Upper mount rubber cover
② Cap
③ Upper mount rubber nut
④ Screw
⑤ Low mount rubber cover
⑥ Ground lead
⑦ Bolt
⑧ Mount rubber housing
⑨ Lower mount rubber nut
⑩ Anode (PTT model)
⑪ Read wire (PTT model)

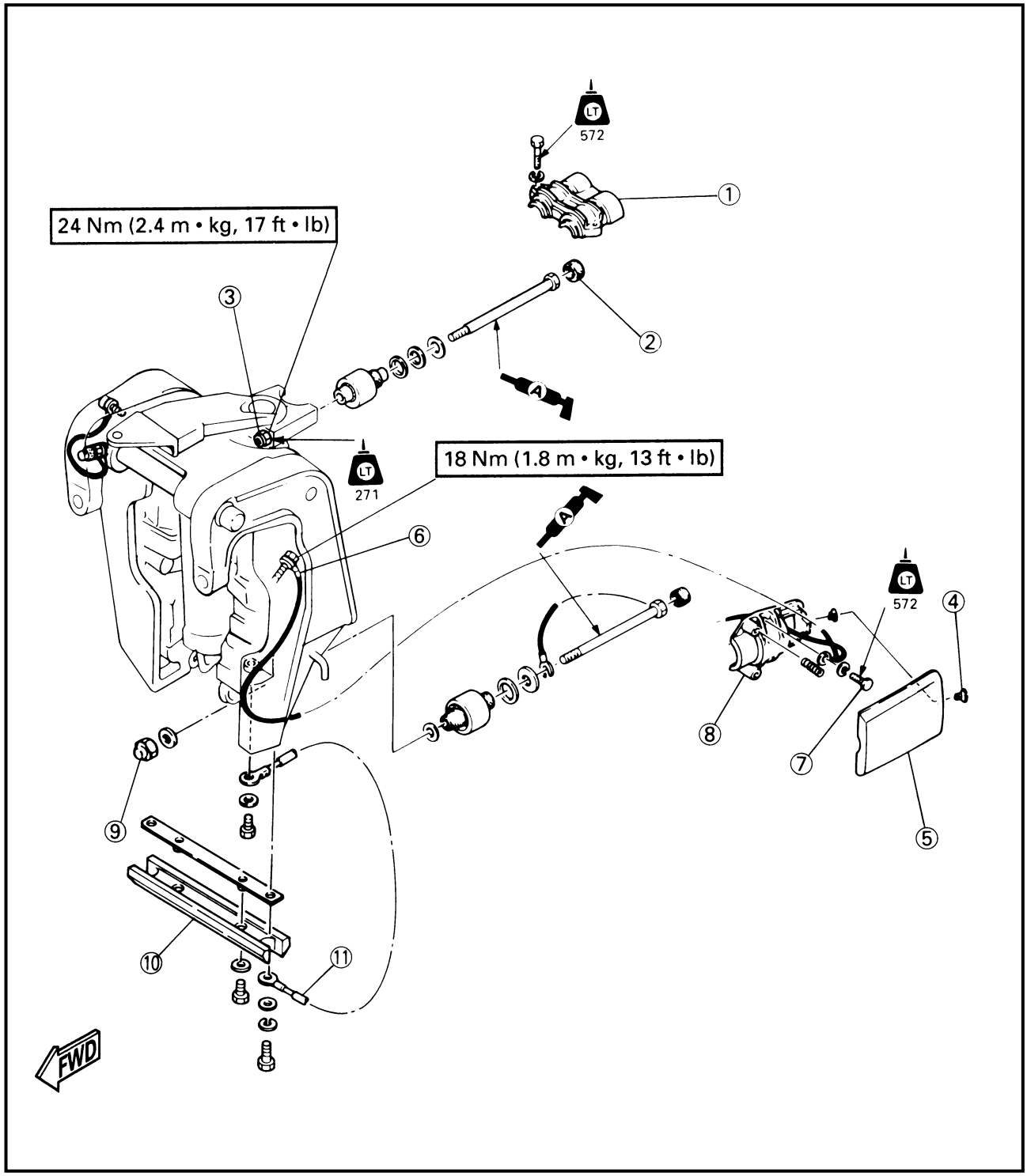

BRACKET UNIT (Manual tilt model)

① Tilt unit
② Tilt lever
③ Clamp bracket spacer
④ Lower shock mount pin
⑤ Bushing

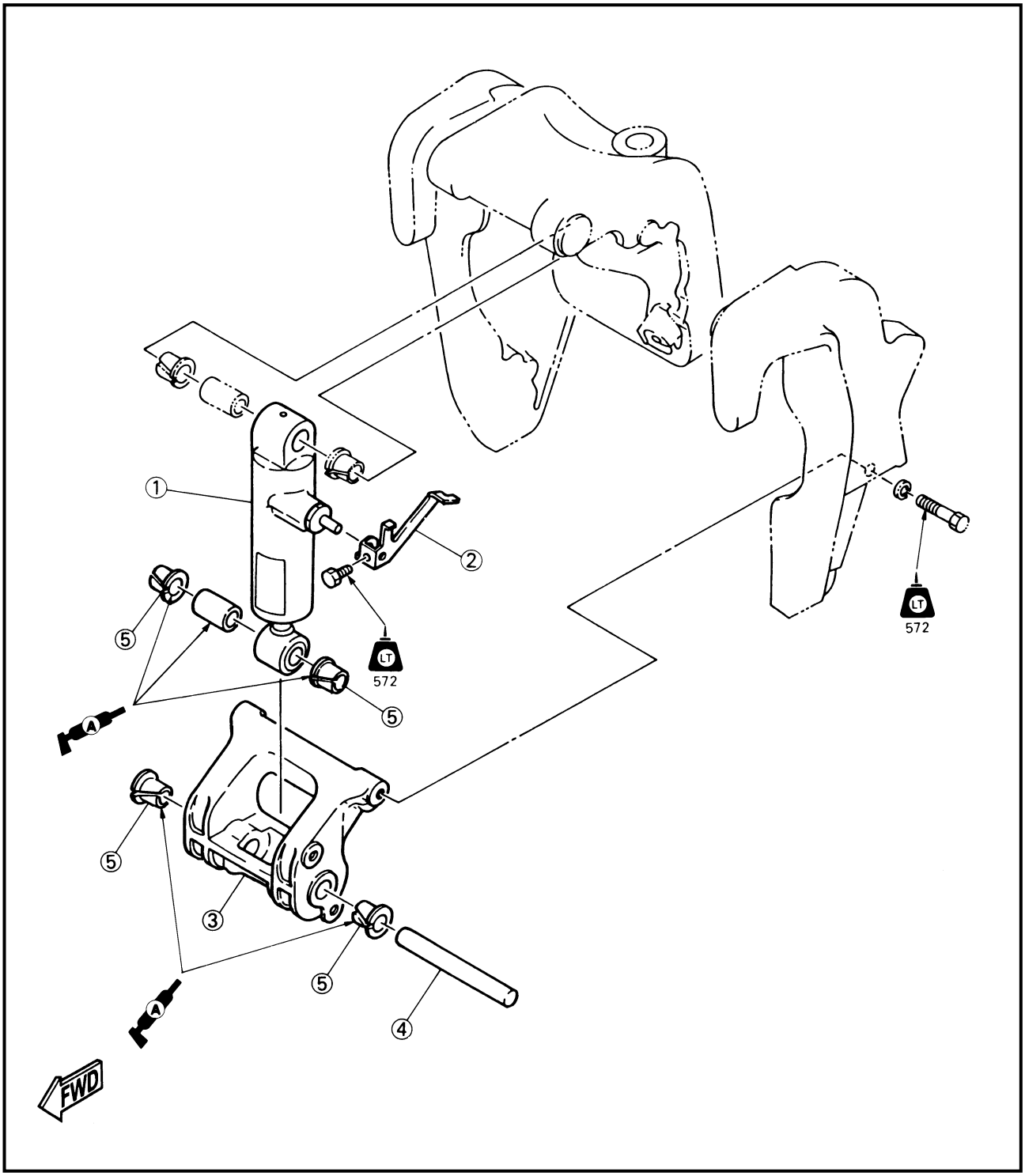

K15900-0

BRACKET (Short transom)

① Circlip
② Lower mounting housing
③ Steering pivot shaft
④ Bushing
⑤ O-ring
⑥ Bushing
⑦ Grease nipple
⑧ Ground lead
⑨ Tilt rod (manual tilt model)
⑩ Clamp bracket nut
⑪ Bolt (6 bolts)
⑫ Clamp bracket bolt
⑬ Washer
⑭ Bushing
⑮ Clamp bracket
⑯ Trim sensor (PTT model)
⑰ Circlip
⑱ Pin
⑲ Bushing
⑳ Power trim and tilt unit (PTT model)
㉑ Cotter pin
㉒ Tilt lock lever
㉓ Bushing
㉔ Washer
㉕ Spring
㉖ Collar

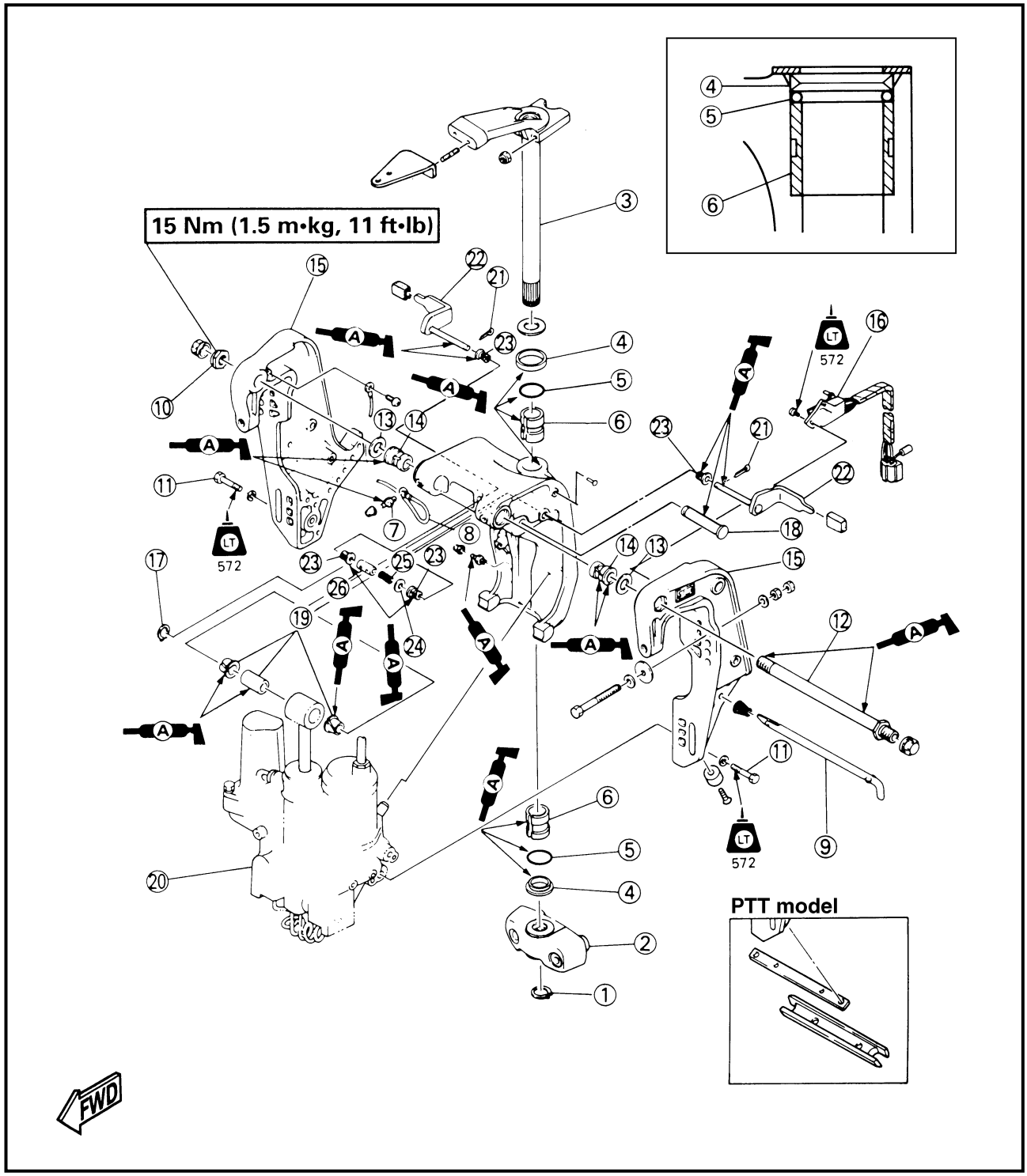

K15900-0

BRACKET (Long transom)

① Circlip
② Lower mounting housing
③ Steering pivot shaft
④ Bushing
⑤ O-ring
⑥ Bushing
⑦ Grease nipple
⑧ Ground lead
⑨ Tilt rod (manual tilt model)
⑩ Clamp bracket nut
⑪ Bolt (6 bolts)
⑫ Clamp bracket bolt
⑬ Washer
⑭ Bushing
⑮ Clamp bracket
⑯ Trim sensor (PTT model)
⑰ Circlip
⑱ Pin
⑲ Bushing
⑳ Power trim and tilt unit (PTT model)
㉑ Tilt lock lever
㉒ Bushing
㉓ Spring
㉔ Collar

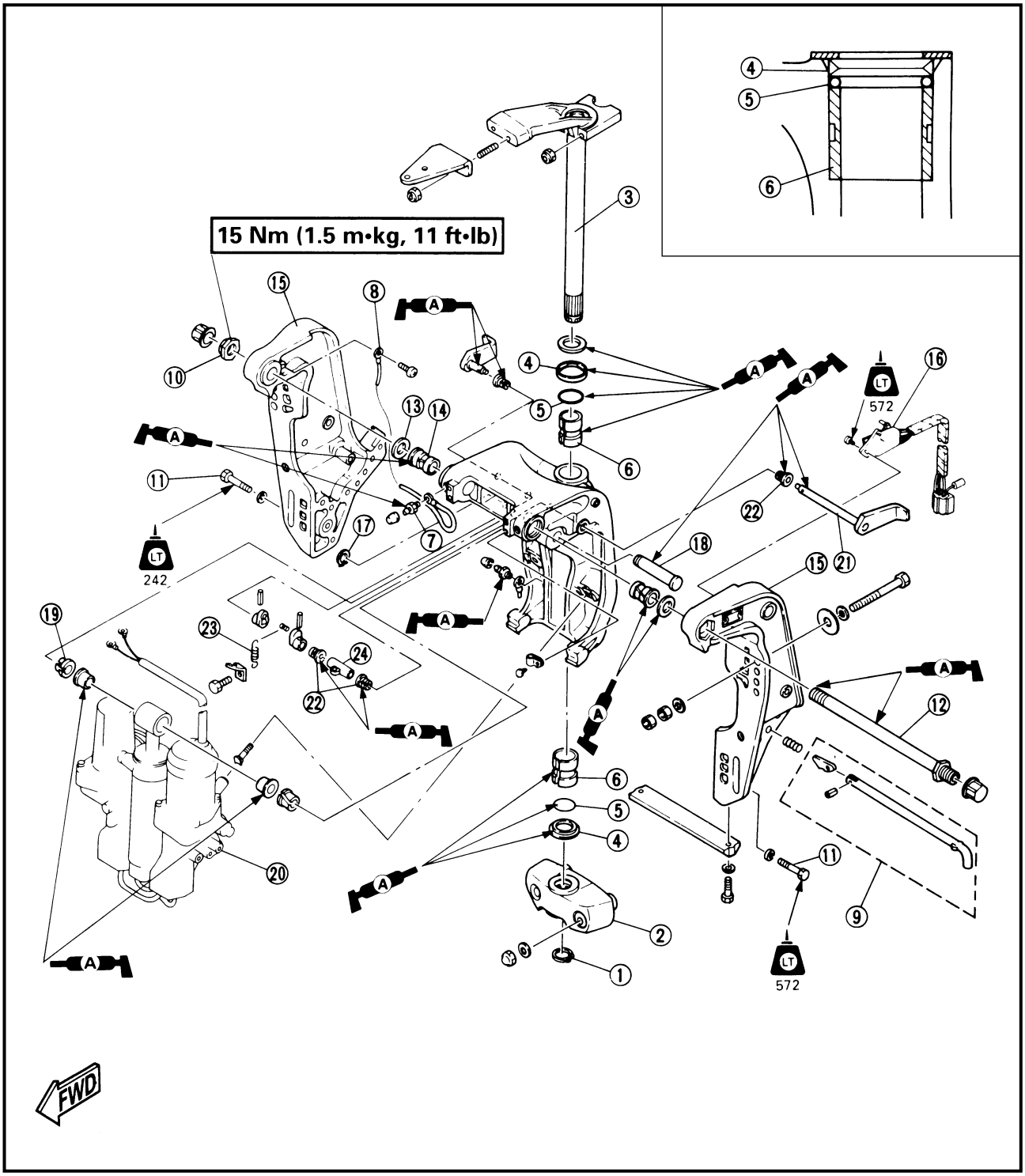

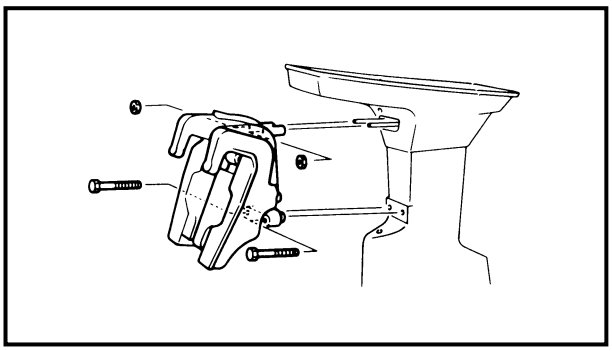

K20002-0

REMOVAL

1. Remove the power-head.
2. Remove the swivel-bracket from the upper casing.

CAUTION:

Lay the outboard motor on the floor to carry out this removal.

DISASSEMBLY

1. Referring to the exploded diagram, disassemble the bracket unit.

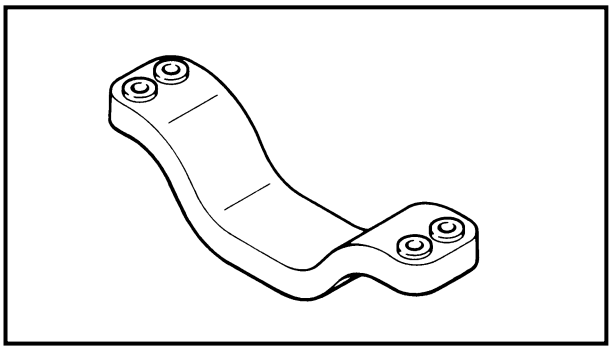

INSPECTION

ANODE

1. Check anode and replace with new one when the size is less than 1/3 of original length.

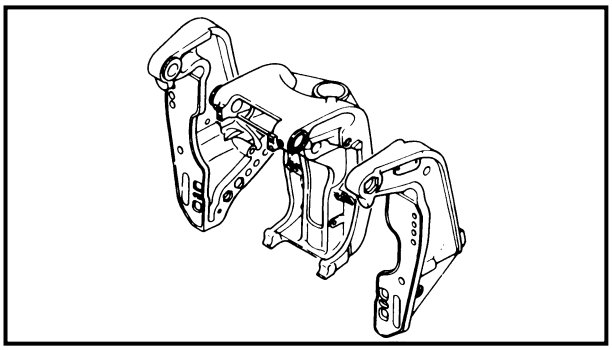

BRACKET

1. Inspect the bracket and replace them, if cracked.

TRIM SENSOR

1. Check resistance of the new trim sensor.

Trim sensor resistance:
Pink – Black
360 ~ 540 Ω
Black – Orange
800 ~ 1200 Ω

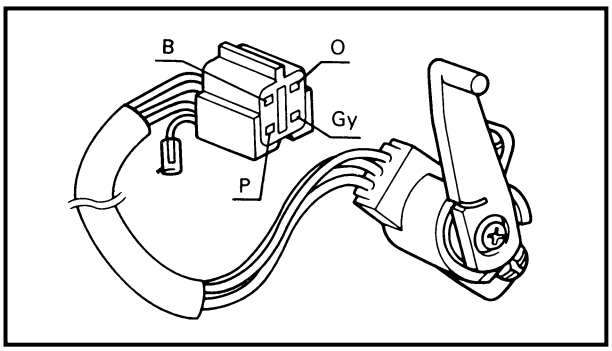

2. Measure resistance between black and pink leads to check that the value changes gradually in the whole trim and tilt range. If not, replace trim sensor with new one.

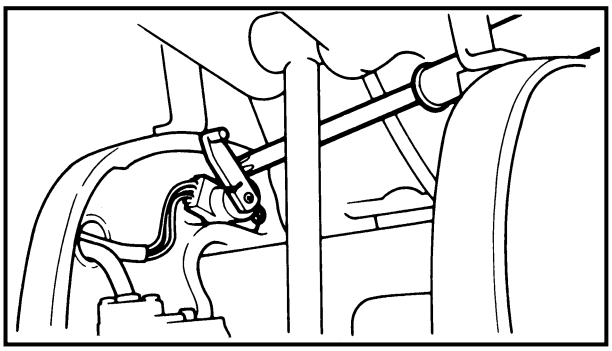

Trim sensor adjustment
Fully tilt up the outboard motor.
Loosen the two bolts securing the trim sensor until it moves slightly.

⚠ WARNING

Be sure to support the engine with the tilt support lever while loosening the bolts to prevent the engine from tilting down due to lack of oil pressure.

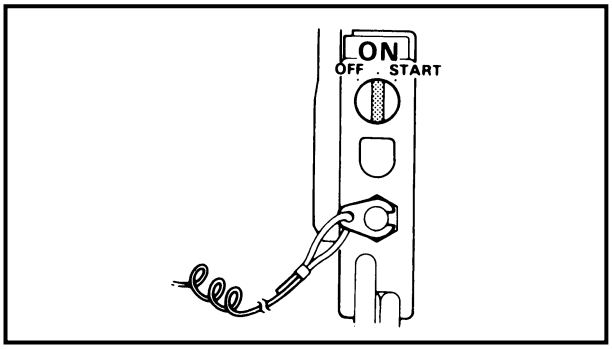

Fully tilt down the outboard motor.

Connect battery cables of the outboard motor to a battery and set the main switch to "ON".

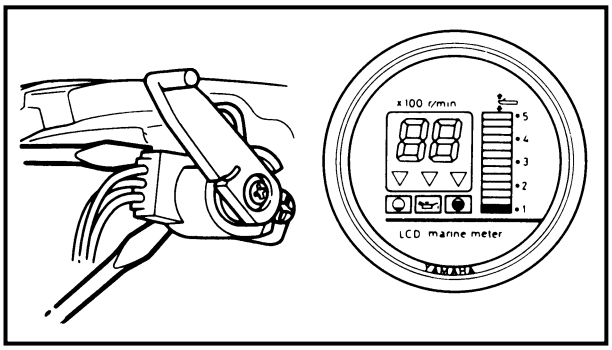

Adjust the trim sensor position by pushing a screw driver so that one segment on the trim indicator on the digital meter goes on.

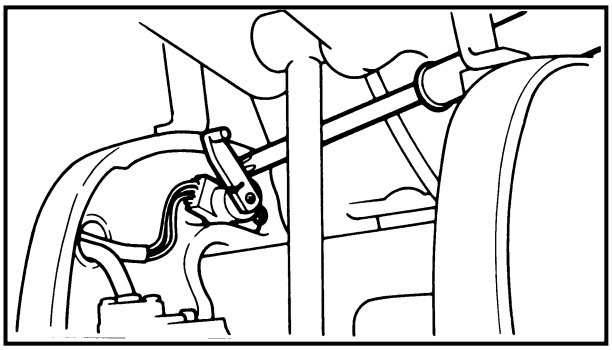

Tilt up the outboard motor and tighten both installation bolts.

⚠ WARNING

Be sure to support the engine with the tilt support lever while tightening the bolts to prevent the engine from tilting down due to lack of oil pressure.

ASSEMBLY

1. Referring to the exploded diagram, assemble the bracket unit.

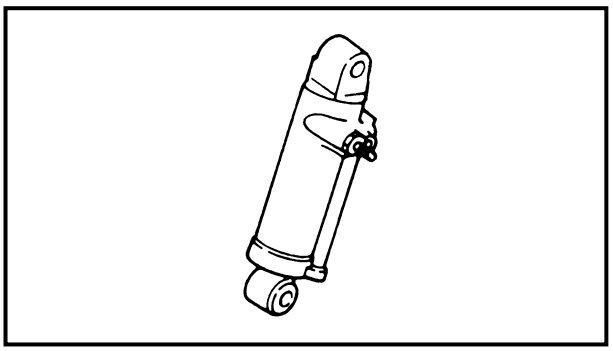

HYDRAULIC TILT UNIT

⚠ WARNING

This cylinder is highly pressurized. Therefore, never overhaul or damage it.

INSPECTION

1. Inspect the tilt cylinder assembly for scratches or corrosion.
   If any scratches are found, replace the tilt cylinder assembly.

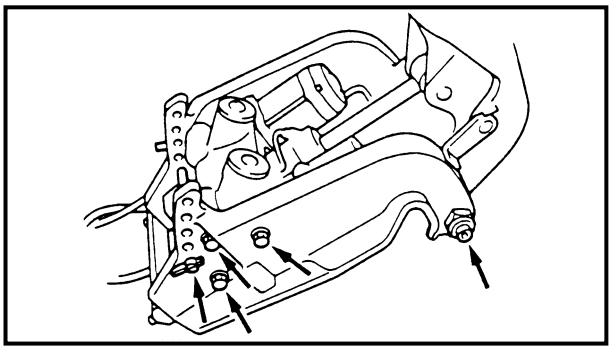

POWER TRIM AND TILT UNIT

REMOVAL

1. Disconnect the leads from the relay in the bottom cowling.
2. Remove the tilt-rod, bolts and nut, and the clamp-bracket.
3. Remove the circlip and the complete power trim and tilt unit.

K51000-0

EXPLODED DIAGRAM (Short transom [6H308])

① Reservoir body
② Reservoir plug
③ Motor assembly
④ Trim cylinder end screw
⑤ Trim piston assembly
⑥ Valve seat screw
⑦ Main valve assembly
⑧ Shuttle piston
⑨ Pipe
⑩ Down relief valve seat
⑪ Down relief spring
⑫ Gear pump assembly
⑬ Shaft connector
⑭ Filter 2
⑮ Up relief valve lock screw
⑯ Up relief spring
⑰ Up relief valve seat
⑱ Filter 1
⑲ Manual valve seat
⑳ Manual release spring
㉑ Adapter
㉒ Free piston
㉓ Back-up ring 2
㉔ Tilt cylinder assembly

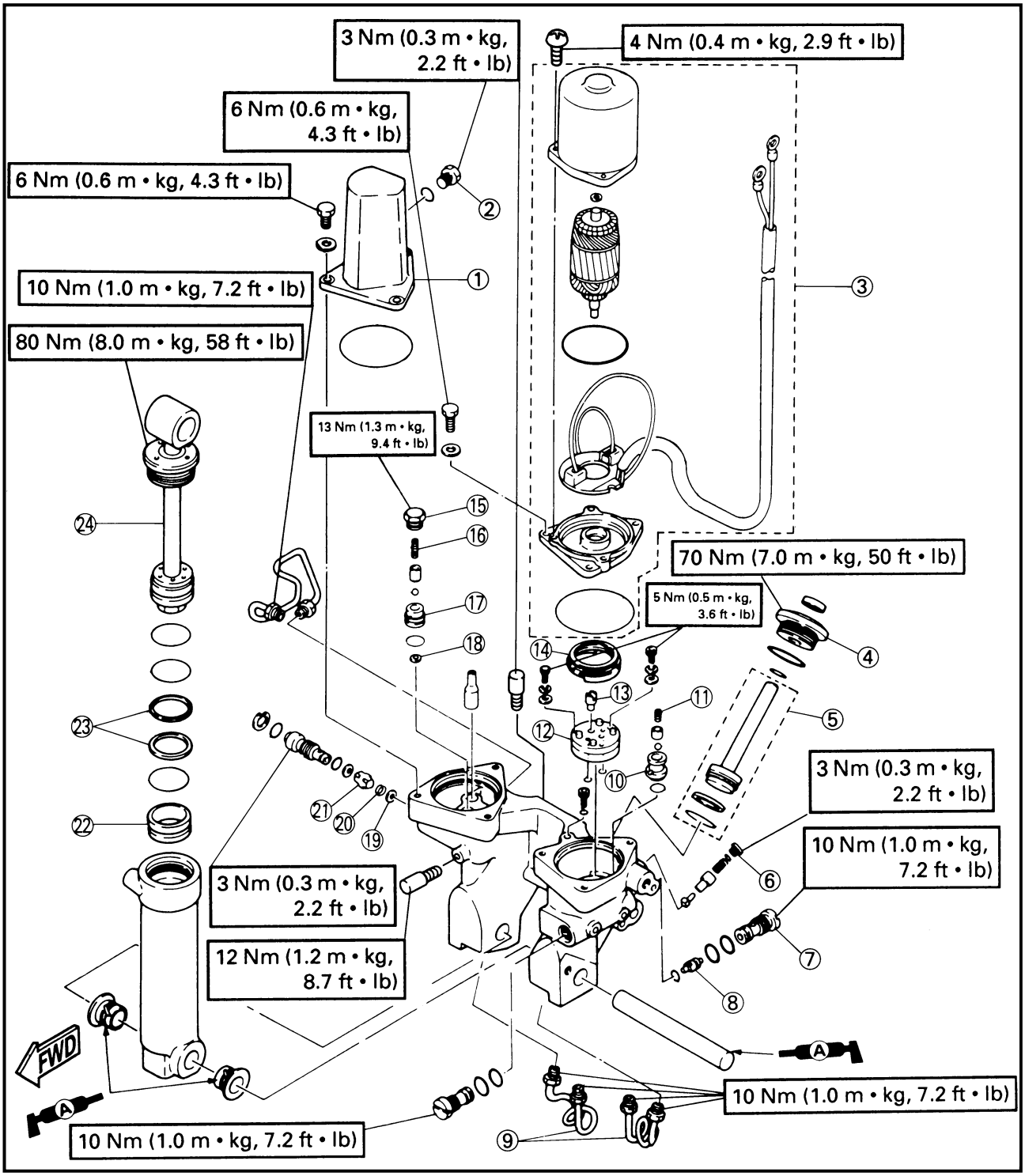

① Power trim and tilt motor
② Gear pump
③ Down-relief valve (48 kg/cm^2)
④ Main valve
⑤ 2-way check valve
⑥ Reservoir
⑦ Up-relief valve (40 kg/cm^2)
⑧ Manual valve
⑨ Tilt cylinder
⑩ Absorber valve (80 kg/cm^2)
⑪ Free piston
⑫ Trim cylinder

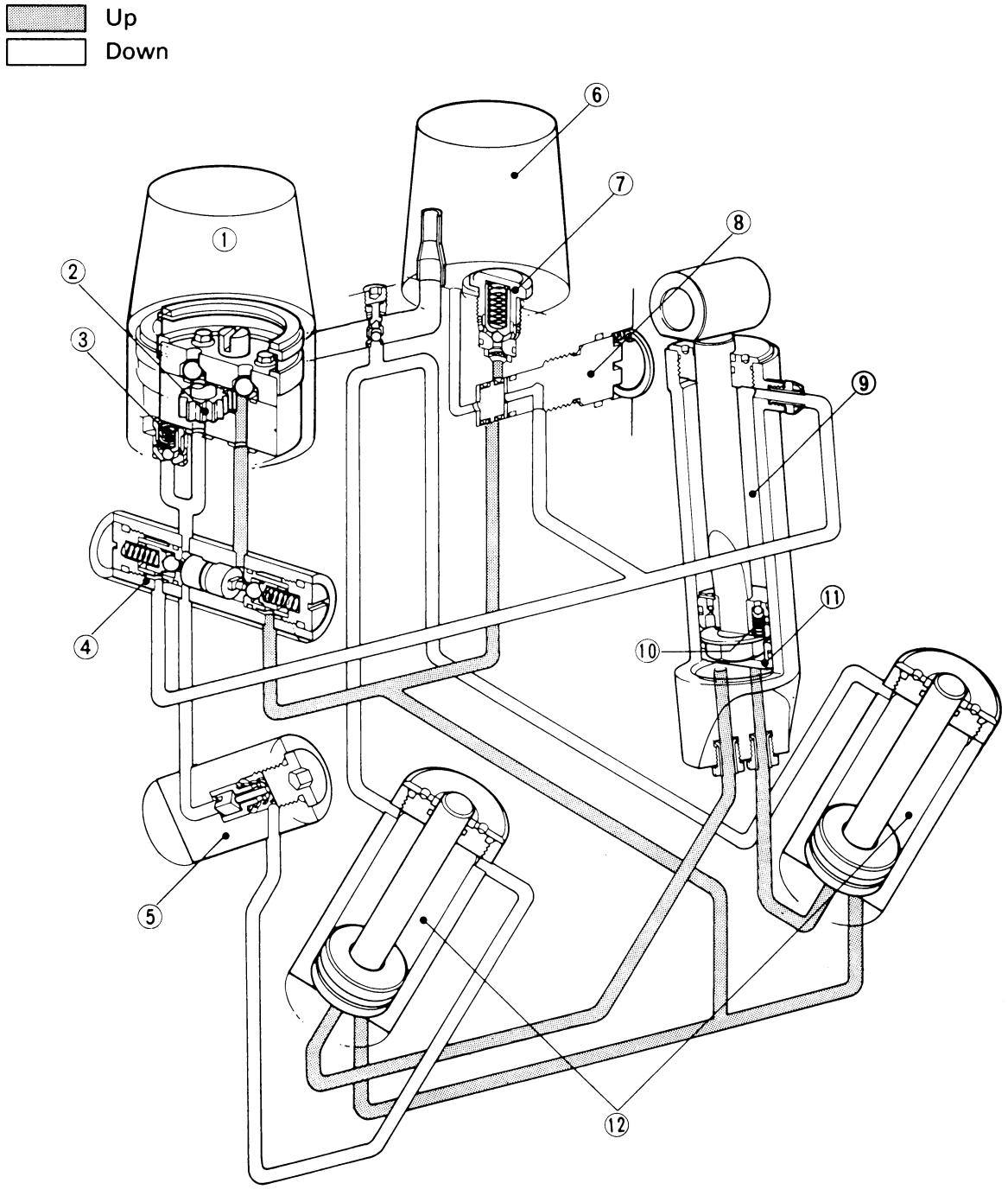

K52002-0

DISASSEMBLY

CAUTION:

1. Do not wipe components of the hydraulic system with rags or paper tissues, etc., as fibers entering the system will cause malfunction.
2. After removing the tilt-motor or oil-reservoir, do not depress the tilt-rod or trim-rod, since this may cause hydraulic fluid to be ejected from the port.

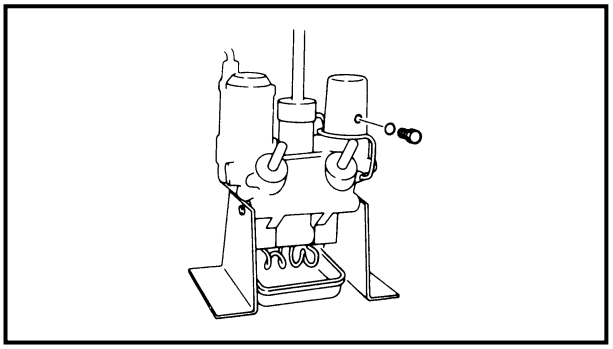

1. Turn the manual valve fully towards the manual position.
2. Remove the hydraulic-fluid level-plug and drain the hydraulic-fluid.
3. Remove the delivery pipes and drain the hydraulic-fluid.
4. Remove the hydraulic-fluid reservoir and the tilt-motor.

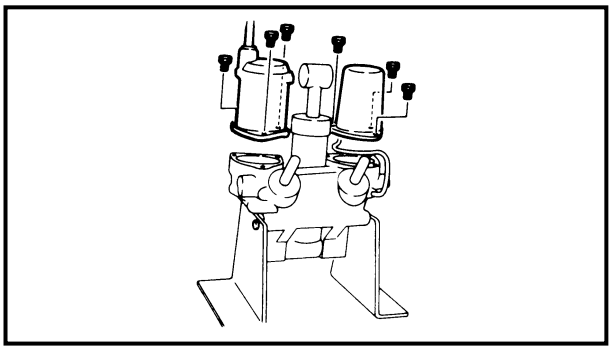

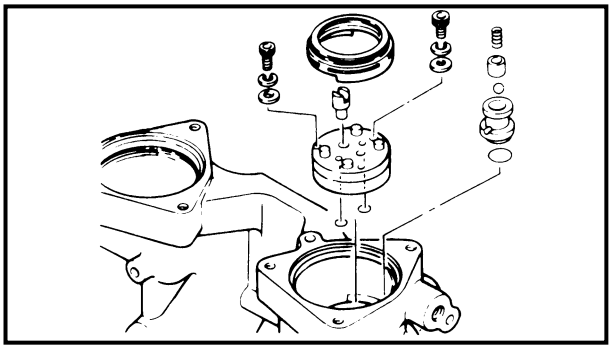

5. Remove the shaft connector.
6. Remove the filter and the gear-pump.
7. Remove the O-rings and the complete down relief-valve.

CAUTION:

Do not disassemble the gear-pump unit which is factory-adjusted, but replace the complete gear-pump unit if necessary.

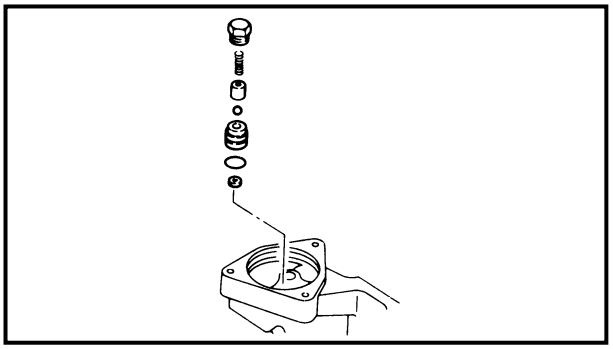

8. Loosen the bolt and remove the complete up-relief valve.

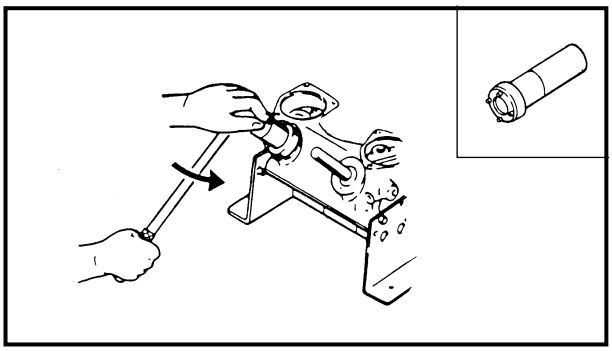

9. Using the special service tool, loosen the trim-cylinder end-screw and pull out the trim-piston and components.

	**Cylinder end screw wrench: YB-6175-1A/90890-06542**

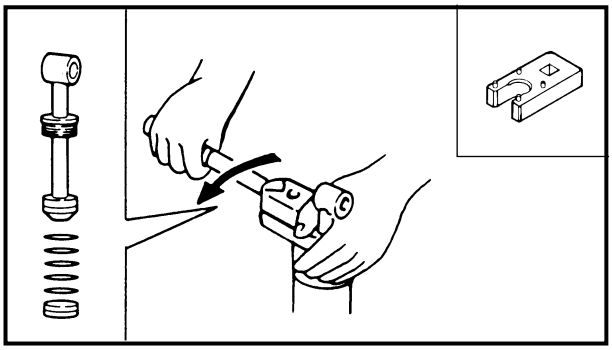

10. Using the special service tool, loosen the tilt-cylinder end-screw and pull out the tile-piston and the free-piston.

⚠ WARNING

The free-piston can be removed easily by blowing compressed air into the drain-hole of the cylinder. Be sure to cover the open end of the cylinder with a rag to prevent the free-piston from being ejected, which could cause injury or piston damage.

	**Cylinder end screw wrench: YB-6175-2B/90890-06544**

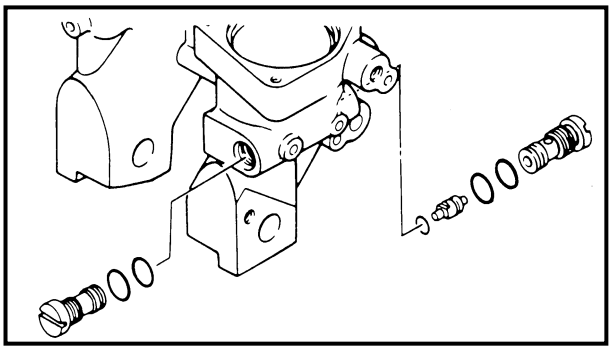

11. Remove the main valves and the shuttle-piston.

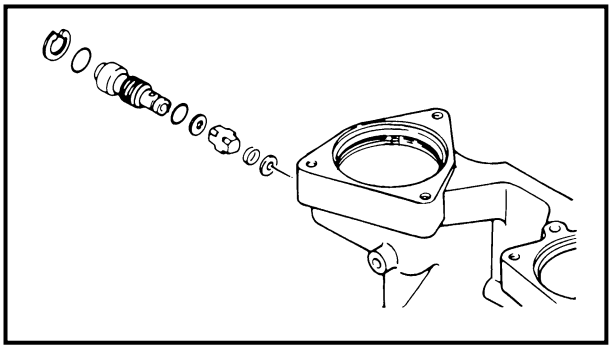

12. Remove the circlip, the manual-valve and components.

NOTE:

The manual-valve screw is threaded left handed.

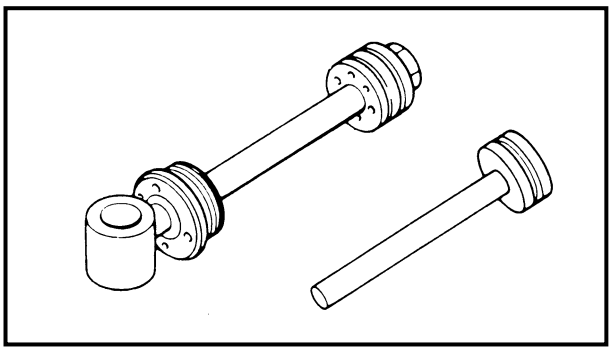

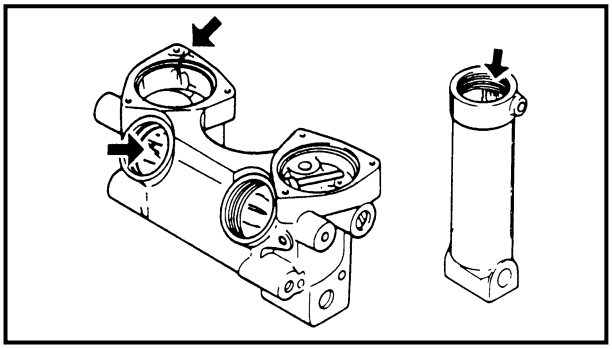

K53000-0

INSPECTION

TILT-ROD AND TRIM-ROD

1. Clean these components using a soft brush and solvent and inspect them carefully. If there are light scratches on the surfaces, these may be polished off using fine wet-or-dry sandpaper (440 ~ 600 grit), but if there is excessive scratching, replace the components.
2. Clean all the parts thoroughly using a soft brush and solvent and dry them with compressed air.
3. Inspect the tilt-cylinder and pump-unit and replace them if they are badly corroded.

K54000-0

ASSEMBLY

NOTE:

The components in this assembly are to be lightly coated with hydraulic fluid before assembly.

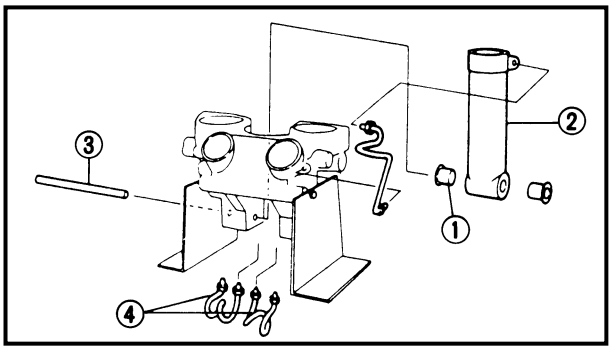

1. Install the tilt-cylinder and the delivery pipes.

① Bushing
② Tilt-cylinder
③ Lower mount pin
④ Delivery pipe

NOTE:

Feed oil into each pipe.

	Lock nut (delivery pipe): **10 Nm (1.0 m • kg, 7.2 ft • lb)**

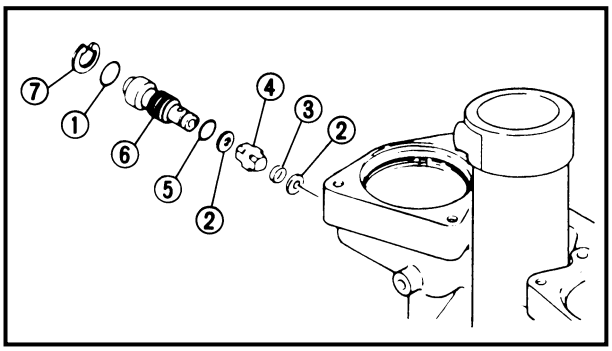

2. Install the manual-valve in the body with new O-rings.

① O-ring (fitted into the body)
② Manual valve seat
③ Manual release spring
(L = 6.0 mm, D = 11.5 mm)
④ Adapter 1
⑤ O-ring
⑥ Manual valve (left-handed thread)
⑦ Circlip

	Manual valve: **3 Nm (0.3 m • kg, 2.2 ft • lb)**

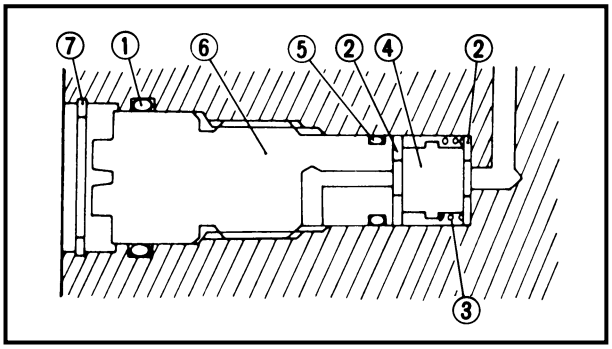

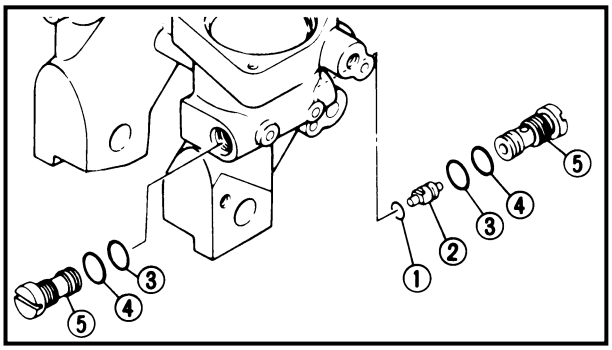

3. Install a new O-ring on the shuttle-piston, insert the piston into the body, then install the main valves with new O-rings.

① O-ring
② Shuttle-piston
③ O-ring
④ O-ring
⑤ Main valve

	Main valve: **10 Nm (1.0 m • kg, 7.2 ft • lb)**

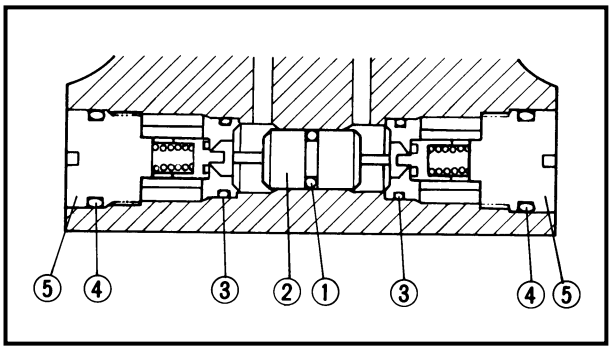

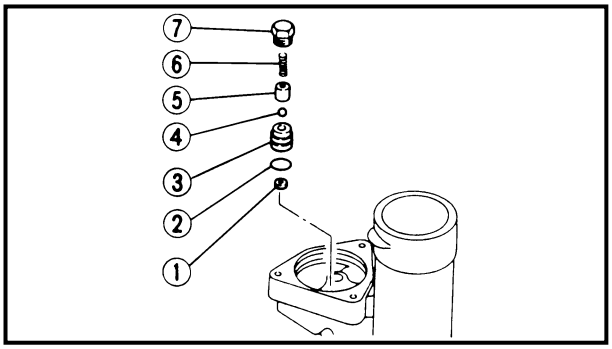

4. Install the up-relief valve with a new O-ring and tighten the locking-bolt to the specified torque.

① Filter
② O-ring
③ Up relief valve seat
④ Ball
⑤ Valve support pin
⑥ Up relief spring (L = 19.7 mm, D = 5 mm)
⑦ Up relief valve lock screw

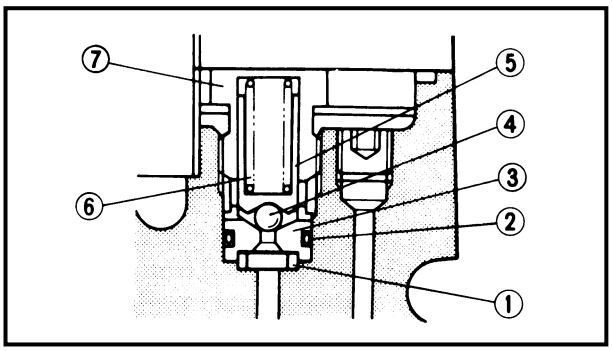

Locking bolt:
13 Nm (1.3 m • kg, 9.4 ft • lb)

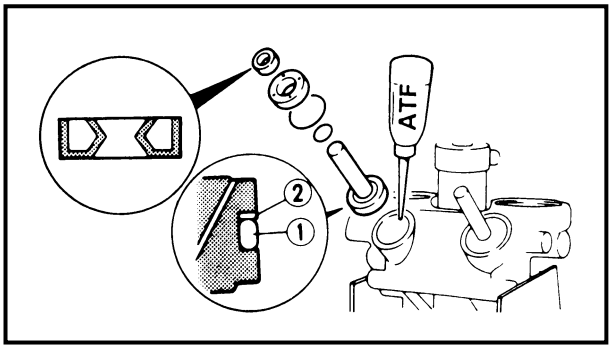

5. Fit a new O-ring and the back-up ring to the trim-piston, fit new O-rings and a new oil-seal to the end-screw and install the complete trim-piston in the cylinder. Fill the cylinder with hydraulic fluid and install and tighten the end-screw to the specified torque.

ATF
(automatic transmission fluid)

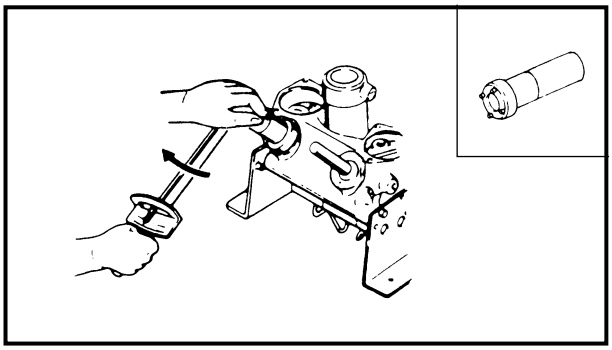

① O-ring
② Back-up ring

Trim cylinder end screw:
70 Nm (7.0 m • kg, 50 ft • lb)

Cylinder end screw wrench:
YB-6175-1A/90890-6548

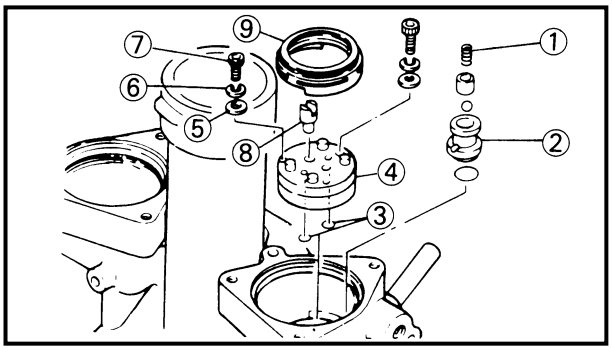

6. Install the down relief-valve and the complete gear-pump with new O-rings, tighten the screws and fit the shaft connector and filter, then fill with hydraulic fluid.

① Down relief spring (L = 13 mm, D = 6.1 mm)
② Down relief valve seat
③ O-rings
④ Gear pump
⑤ Washer
⑥ Washer
⑦ Screw (Use hexagon wrench)
⑧ Shaft connector
⑨ Filter

Gear pump mounting screw:
5 Nm (0.5 m • kg, 3.6 ft • lb)

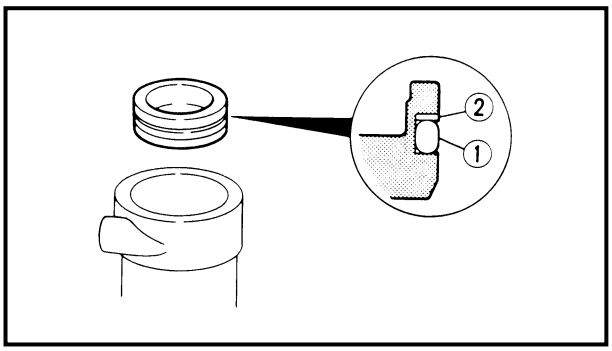

7. Fit a new O-ring and the back-up ring on the free-piston and install it into the cylinder.

① O-ring
② Back-up ring

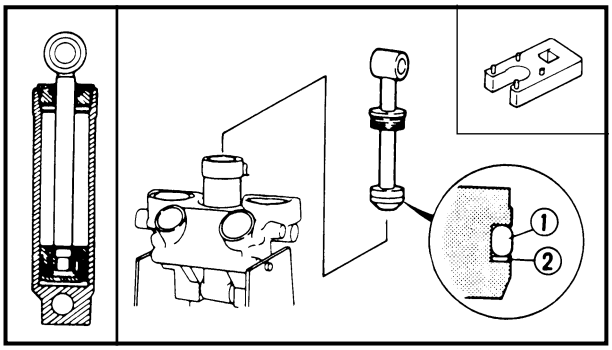

8. Fit a new O-ring and the back-up ring to the tilt-piston and install it into the cylinder.
   Fill the cylinder with hydraulic fluid and tighten the end-screw to the specified torque.

① O-ring
② Back-up ring

	**Cylinder end screw wrench: YB-6175-2B/90890-06544**
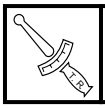	**Tilt cylinder end screw: 80 Nm (8.0 m • kg, 58 ft • lb)**

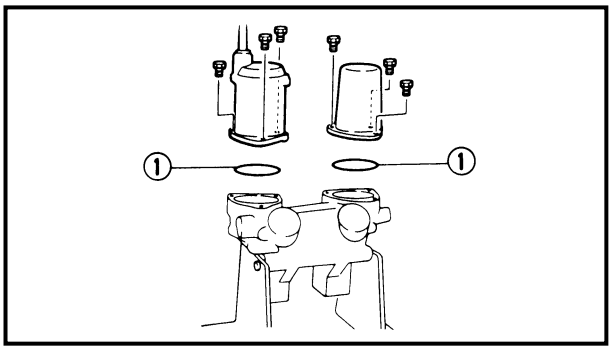

9. Align the connector-shaft keyway with the motor-shaft projection and install the motor with new O-ring.

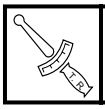	**Bolt (tilt motor): 4 Nm (0.4 m • kg, 2.9 ft • lb)**

10. Install the hydraulic-fluid reservoir with new O-ring.

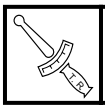	**Bolt (reservoir body): 6 Nm (0.6 m • kg, 4.3 ft • lb)**

① O-ring

11. Air bleeding. Refer to page 7-28.

EXPLODED DIAGRAM (Long transom [6H1-15], [62F-02])

① Reservoir body
② Reservoir plug
③ Motor assembly
④ Trim cylinder end screw
⑤ Trim piston assembly
⑥ Main valve assembly
⑦ Shuttle piston
⑧ Pipe
⑨ Main valve seal
⑩ Valve support pin
⑪ Down relief spring
⑫ Gear pump assembly
⑬ Shaft connector
⑭ Filter 1
⑮ Valve lock screw
⑯ Trim spring
⑰ Up relief spring
⑱ Up relief valve seat
⑲ Filter 2
⑳ Manual valve seat
㉑ Manual release spring
㉒ Adapter
㉓ Manual release screw
㉔ Free piston
㉕ Back up ring

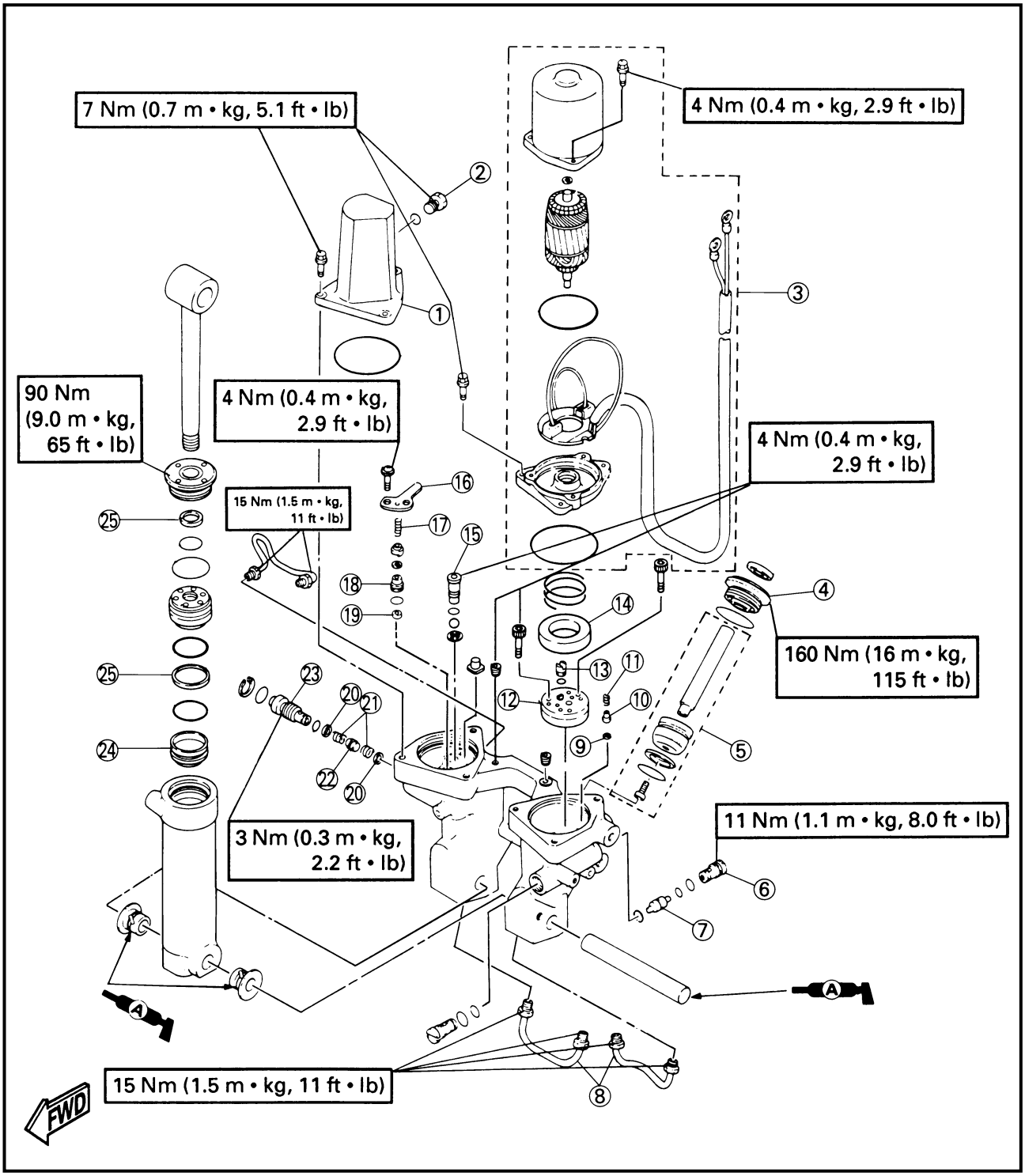

① Trim down valve (0.2 kg/cm^2)
② Trim down valve (1 kg/cm^2)
③ Reservoir
④ Up-relief valve (100 kg/cm^2)
⑤ Manual valve
⑥ Tilt cylinder
⑦ Absorber valve (180 kg/cm^2)
⑧ Trim cylinder
⑨ Main valve (0.5 kg/cm^2)
⑩ Down-relief valve (30 kg/cm^2)
⑪ Gear pump
⑫ Power trim and tilt motor

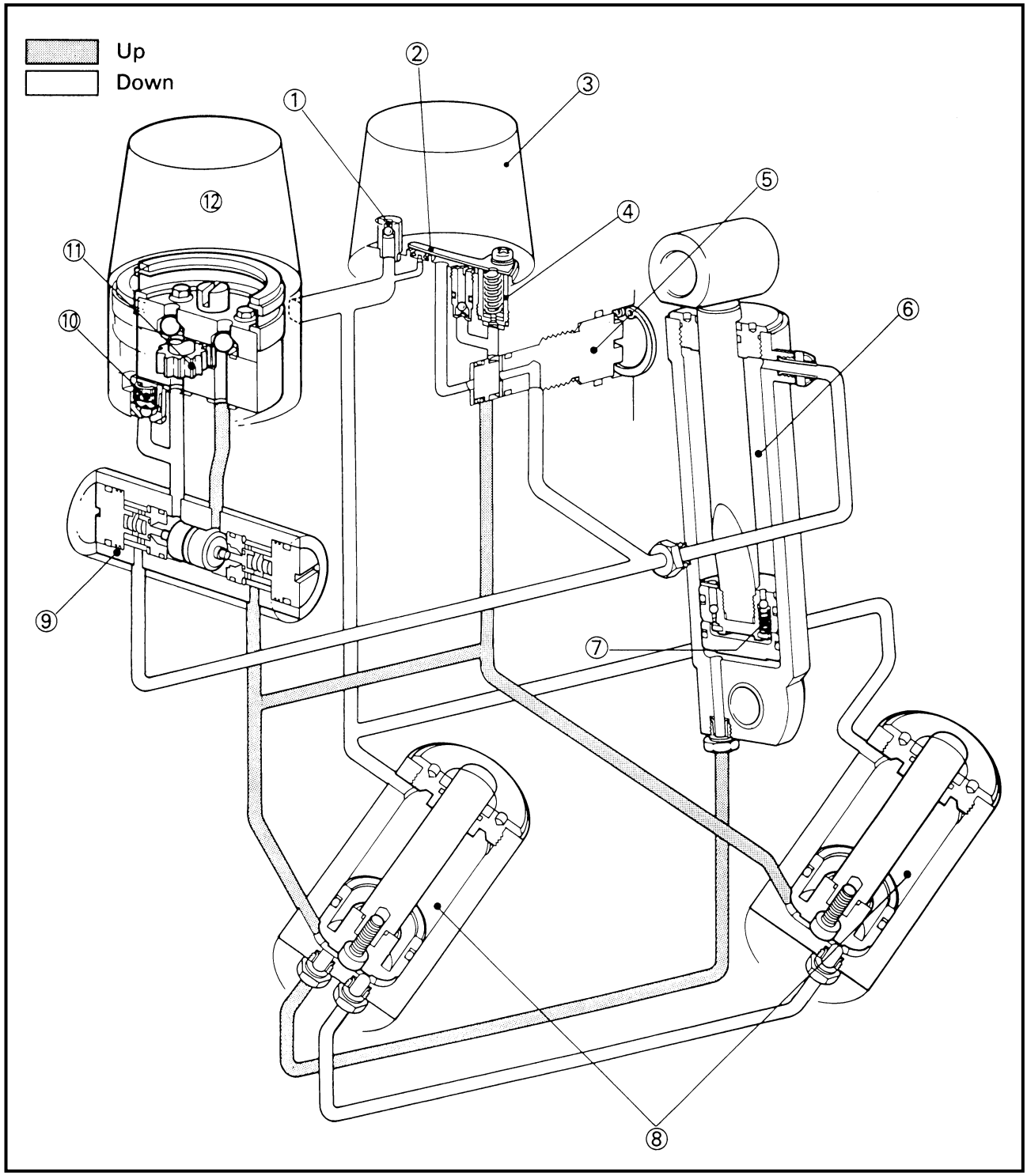

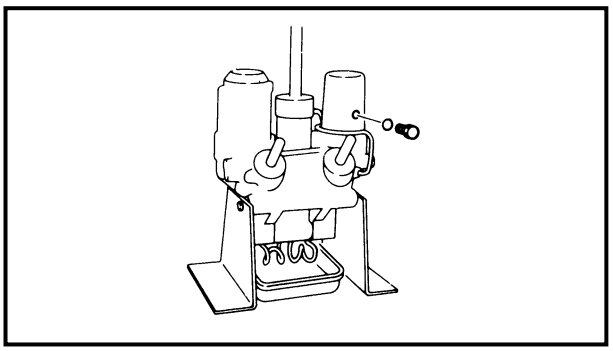

K52002-0

DISASSEMBLY

CAUTION:

1. Do not wipe components of the hydraulic system with rags or paper tissues, etc., as fibers entering the system will cause malfunction.
2. After removing the tilt-motor or oil-reservoir, do not depress the tilt-rod or trim-rod which may cause hydraulic fluid to be ejected from the port.

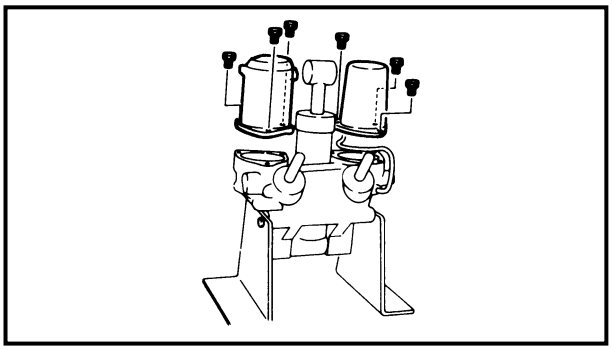

1. Turn the manual valve fully towards the manual position.
2. Remove the delivery pipes and the hydraulic-fluid level-plug.
3. Remove the hydraulic-fluid reservoir and the tilt-motor.
4. Remove the shaft connector.

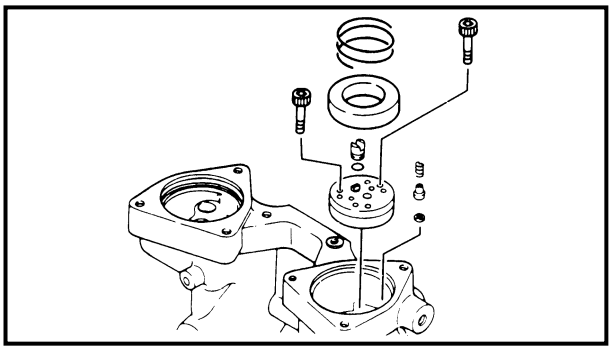

5. Remove the filter and the gear-pump.
6. Remove the O-rings and the complete down relief-valve.

CAUTION:

Do not disassemble the gear-pump unit which is factory-adjusted, but replace the complete gear-pump unit if necessary.

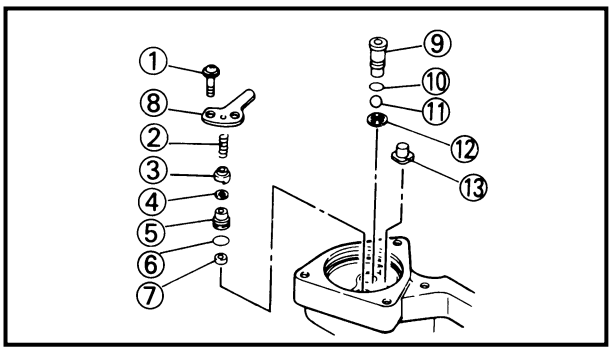

7. Loosen the screw and remove the complete up-relief valve.

① Screw
② Up relief spring
③ Valve support pin
④ Relief valve seal
⑤ Relief valve seat
⑥ O-ring
⑦ Filter
⑧ Trim spring

8. Remove the one-way valve and main valve seal.

⑨ Valve lock screw
⑩ O-ring
⑪ Ball
⑫ Washer
⑬ Main valve seal

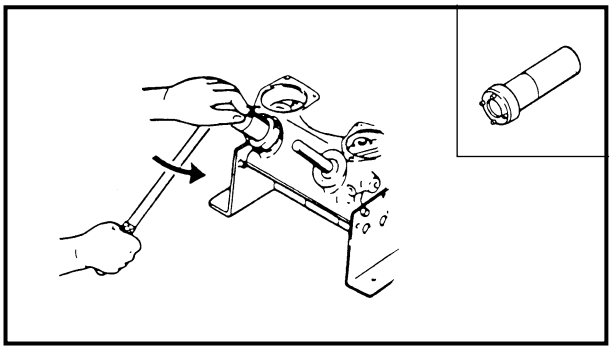

9. Loosen the trim-cylinder end-screw and pull out the trim-piston and components.



Cylinder end screw wrench: YB-6175-1A/90890-6548

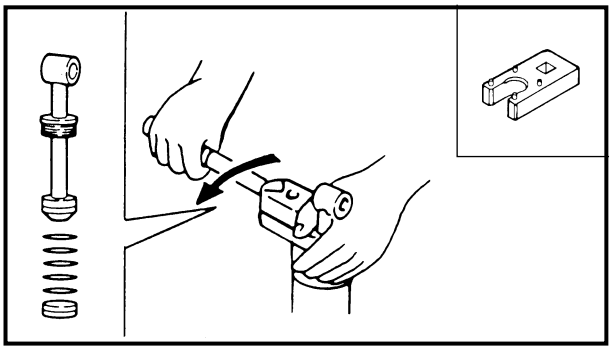

10. Loosen the tilt-cylinder end-screw and pull out the tilt-piston and the free-piston.

⚠ WARNING

The free-piston can be removed easily by blowing compressed air into the drain-hole of the cylinder. Be sure to cover the open end of the cylinder with a rag to prevent the free-piston from being ejected, which could cause injury or piston damage.



Cylinder end screw wrench: YB-6175-2B/90890-06544

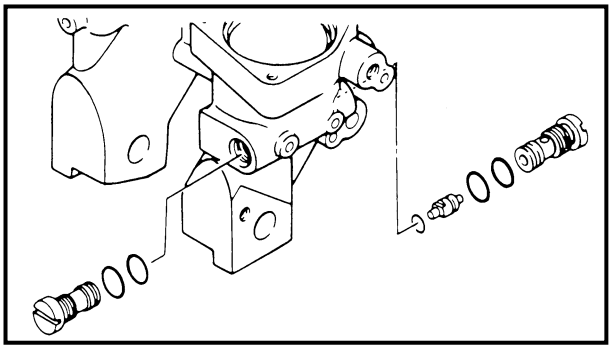

11. Remove the main valves and the shuttle-piston.

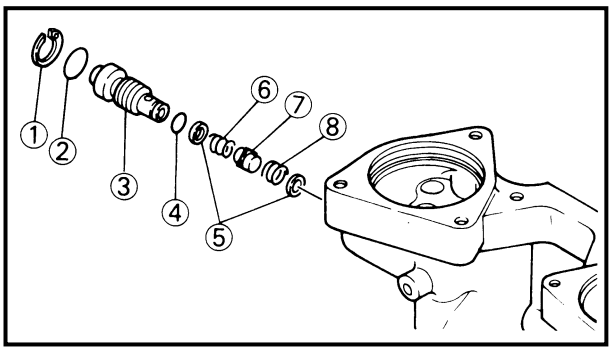

12. Remove the circlip and the manual valve and components.

① Snap ring
② O-ring
③ Manual release screw
④ O-ring
⑤ Manual valve seat
⑥ Manual release spring 1
⑦ Adapter 1
⑧ Manual release spring 2

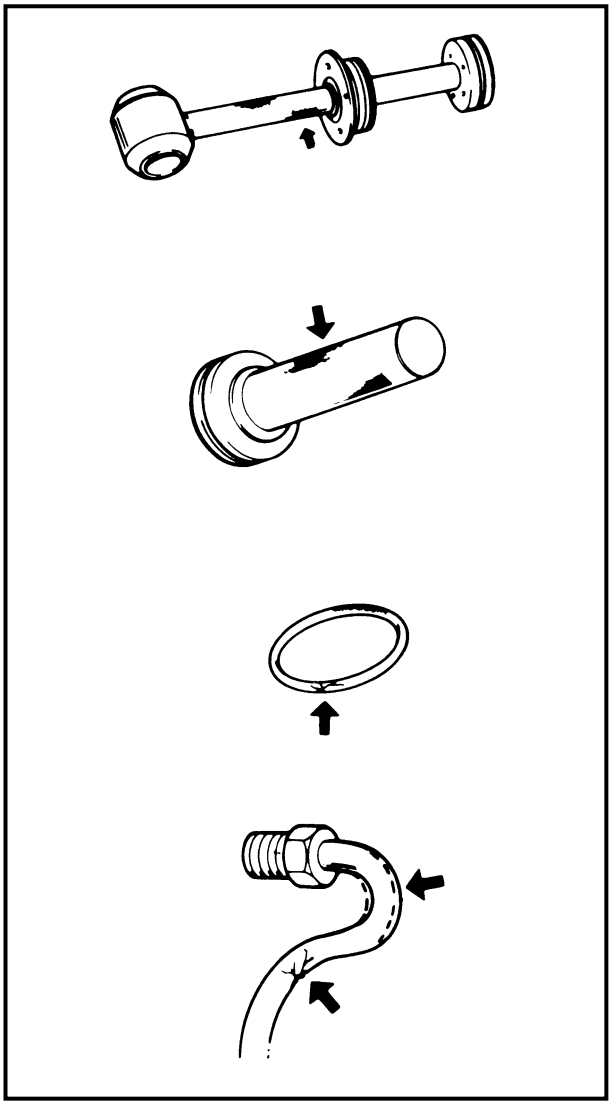

K53000-0

INSPECTION

TILT-ROD AND TRIM-ROD

1. Clean these components using a soft brush and solvent and inspect them carefully. If there are light scratches on the surfaces, these may be polished off using fine wet-or-dry sandpaper (440 ~ 600 grit), but if there is excessive scratching, replace the components.

2. Clean all the parts thoroughly using a soft brush and solvent and dry them with compressed air.

3. Inspect the tilt-cylinder and pump-unit and replace them if they are badly corroded.

K54001-0*

ASSEMBLY

NOTE:

The components in this assembly are to be lightly coated with hydraulic fluid before assembly.

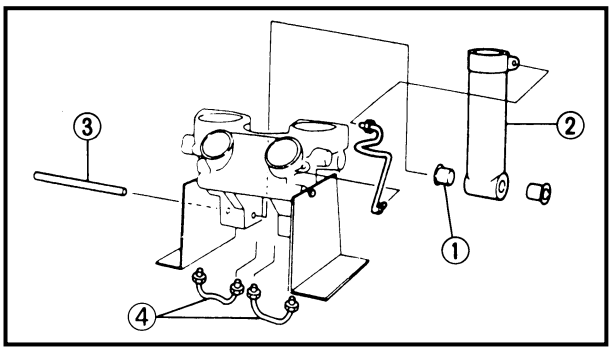

1. Install the tilt-cylinder and the delivery pipes.

① Bushing
② Tilt-cylinder
③ Lower mount pin
④ Delivery pipe

NOTE:
Feed oil into each pipe.

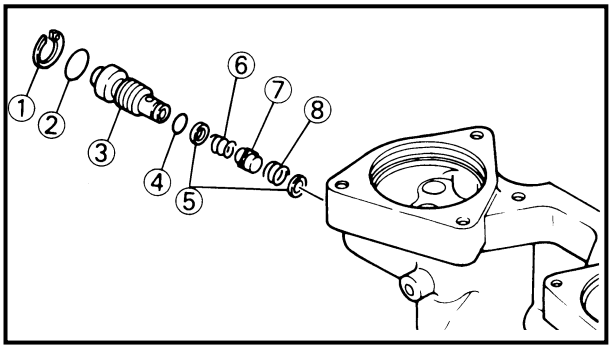

	Lock nut (delivery pipe): **15 Nm (1.5 m • kg, 11 ft • lb)**

2. Install the manual-valve in the body with new O-rings.

① Snap ring
② O-ring
③ Manual release screw
④ O-ring
⑤ Manual valve seat
⑥ Manual release spring (ø0.6 mm)
⑦ Adapter 1
⑧ Manual release spring (ø1.2 mm)

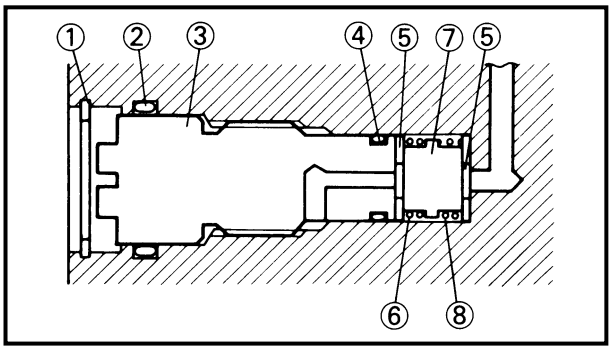

	Manual valve: **3 Nm (0.3 m • kg, 2.2 ft • lb)**

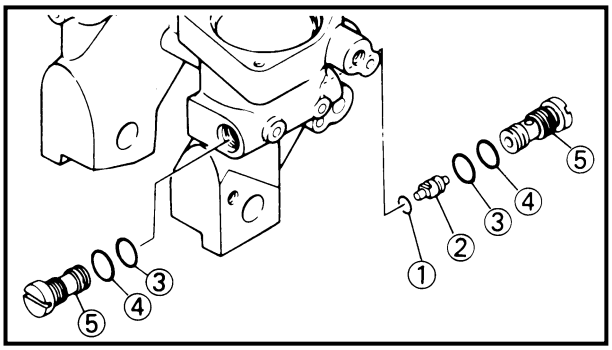

3. Install a new O-ring on the shuttle-piston and insert the piston into the body, then install the main valves with new O-rings.

① O-ring
② Shuttle-piston
③ O-ring
④ O-ring
⑤ Main valve

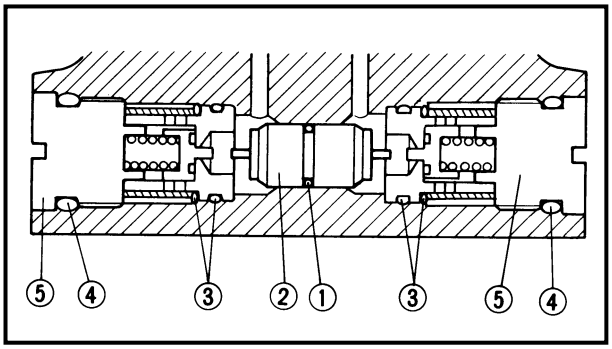

	Main valve: **11 Nm (1.1 m • kg, 8.0 ft • lb)**

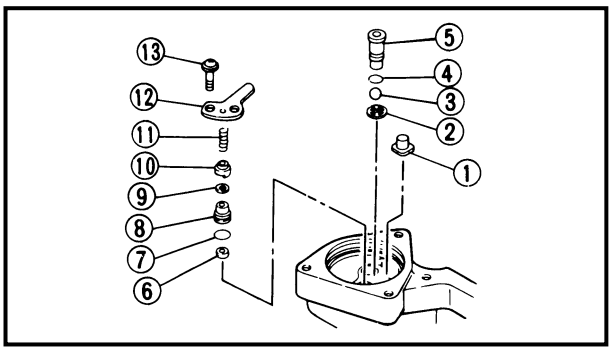

4. Install the up-relief valve and the valve lock screw with new O-rings and tighten the screw to the specified torque.

① Main valve seal
② Washer
③ Ball
④ O-ring
⑤ Valve lock screw
⑥ Filter
⑦ O-ring
⑧ Up relief valve seat
⑨ Up relief valve seal
⑩ Valve support pin
⑪ Up relief spring
⑫ Trim spring
⑬ Screw

Valve lock screw:
4 Nm (0.4 m • kg, 2.9 ft • lb)
Screw:
4 Nm (0.4 m • kg, 2.9 ft • lb)

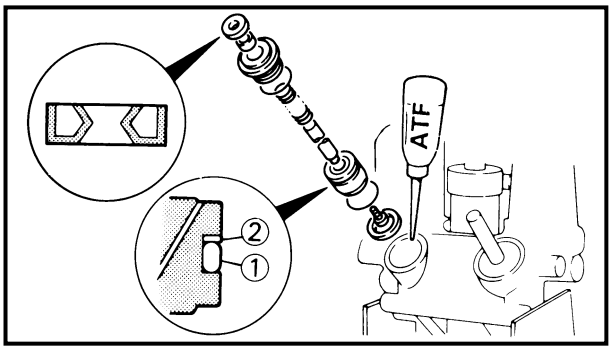

5. Fit a new O-ring and the back-up ring on the trim-piston, fit new O-rings and a new oil-seal on the end-screw and install the complete trim-piston in the cylinder. Fill the cylinder with hydraulic fluid and install and tighten the end-screw to the specified torque.

ATF
(automatic transmission fluid)

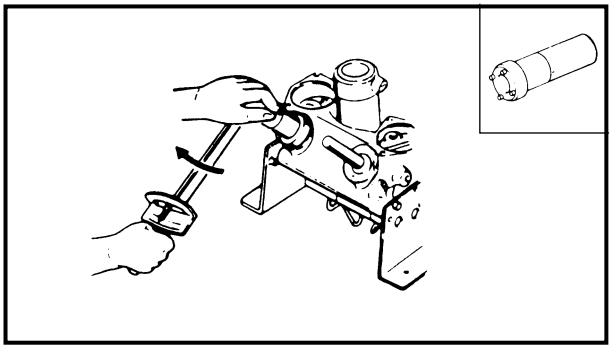

① O-ring
② Back-up ring

End-screw (trim cylinder):
160 Nm (16 m • kg, 115 ft • lb)

Cylinder end screw wrench:
YB-6175-1A/90890-6548

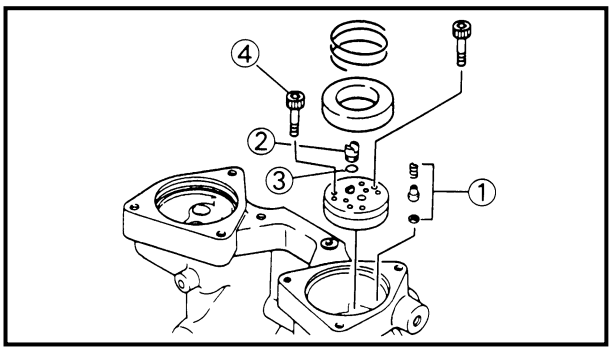

6. Install the down relief-valve and the gear-pump complete with new O-rings, tighten the bolts, and fit the connector-shaft and filter, then fill with hydraulic fluid.

① Down relief-valve assembly
② Shaft-connector
③ O-ring
④ Bolt

	Bolt: **4 Nm (0.4 m • kg, 2.9 ft • lb)**

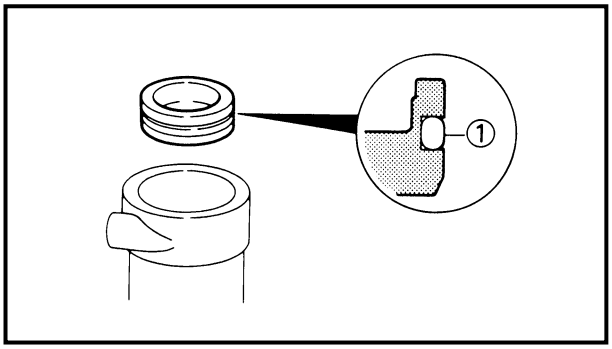

7. Fit a new O-ring on the free-piston and install it into the cylinder.

① O-ring

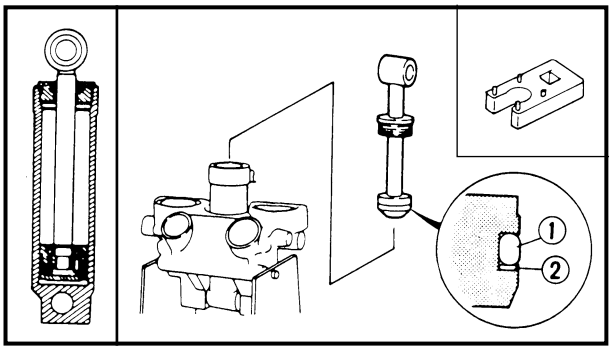

8. Fit a new O-ring and the back-up ring to the tilt-piston and install the piston in the cylinder. Fill the cylinder with hydraulic fluid and tighten the end-screw to the specified torque.

① O-ring
② Back-up ring

	End-screw (tilt cylinder): **90 Nm (9.0 m • kg, 65 ft • lb)**
	Cylinder end screw wrench: **YB-6175-2B/90890-06544**

9. Align the connector-shaft keyway with the motor-shaft projection and install the motor with a new O-ring.

	Bolt (tilt motor): **4 Nm (0.4 m • kg, 2.9 ft • lb)**

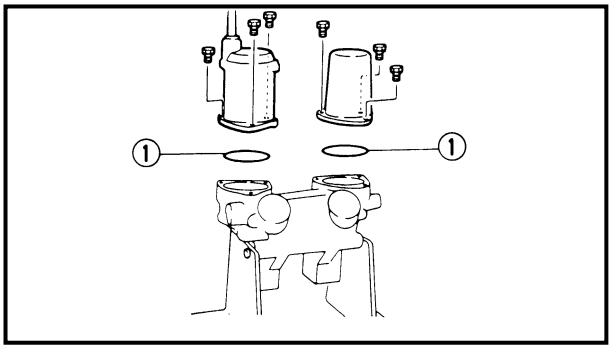

10. Install the hydraulic-fluid reservoir with a new O-ring.

	Bolt (reservoir body): **7 Nm (0.7 m • kg, 5.1 ft • lb)**

① O-ring

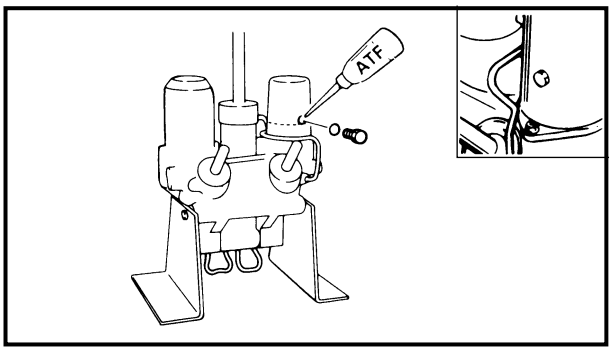

FILLING WITH HYDRAULIC FLUID AND AIR-BLEEDING

1. Pour in the fluid until it overflows from the fluid-level plug-hole and install the reservoir plug.

	ATF **(automatic transmission fluid)**

2. Turn the manual-valve fully towards manual-tilt. Depress the tilt-rod fully, then close the manual valve. Use the motor to go fully up, check hydraulic and top if necessary. Open the manual valve and repeat these operations two or three times. Then, turn the manual-valve fully towards power-tilt.

3. Check the level of the hydraulic fluid at full tilt up, top up with fluid if necessary. Insert and tighten the fluid-level plug.

4. Connect the leads to a battery to check the function.

Trim and tilt up	**Blue (+)**
	Green (–)
Trim and tilt down	**Green (+)**
	Blue (–)

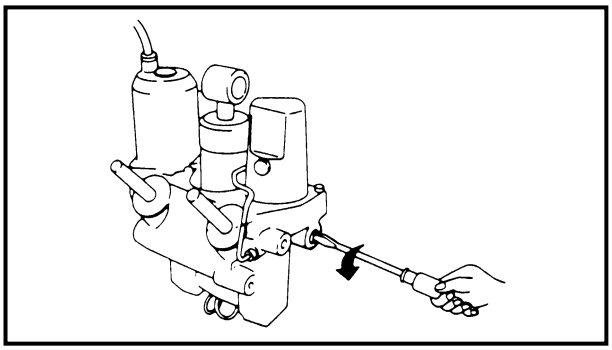

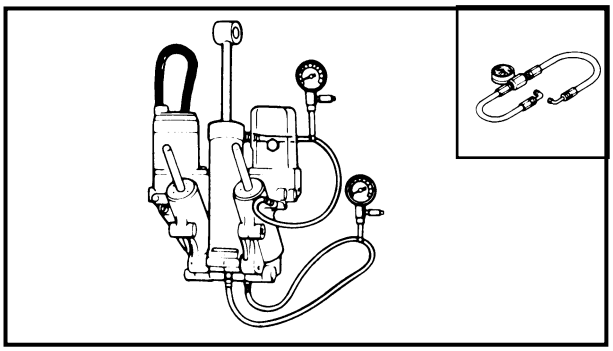

K55506-0*

HYDRAULIC FLUID PRESSURE TEST

Drive the motor to check trim and tilt up and down operation and fluid leakage.

1. Close the manual valve.

2. Connect the pressure gauge.

NOTE:

- Feed hydraulic fluid into each pipe while taking care not to allow air to enter.
- Two set of hoses are required so that both of the trim and tilt pressures can be measured at the same time.

	Pressure gauge: **YB-6181**

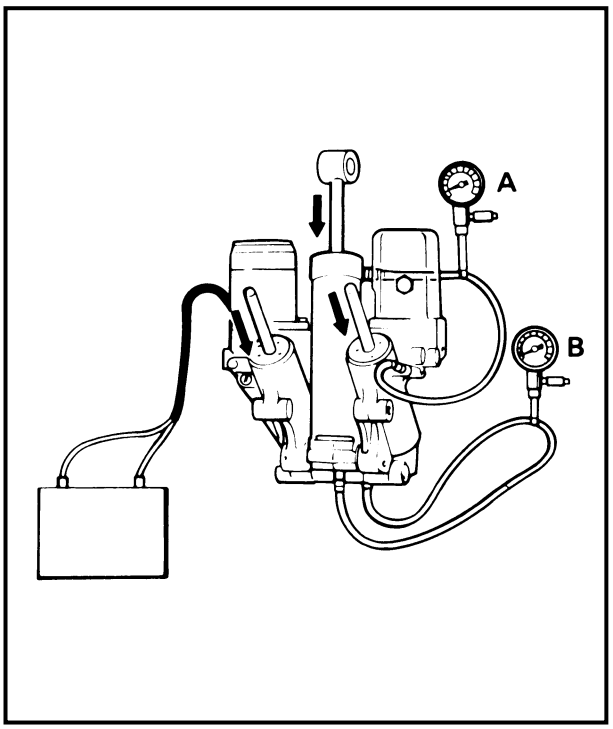

3. Connect the leads to a battery to check the fluid discharge pressure during down-operation.

Trim and tilt down ..... Green (+)	**Blue (–)**

CAUTION:

The motor should not be operated for more than three seconds after trim and tilt down is completed.

A: Tilt operating pressure
B: Trim operating pressure

At the end of down operation:
[Stamped mark]
[6H308]
A: 4,100 ~ 5,500 kPa
(41 ~ 55 kg/cm^2, 583 ~ 782 psi)
B: 600 ~ 1,100 kPa
(6 ~ 11 kg/cm^2, 85 ~ 157 psi)
[6H1-15]
A: 2,200 ~ 3,800 kPa
(22 ~ 38 kg/cm^2, 313 ~ 540 psi)
B: 600 ~ 1,100 kPa
(6 ~ 11 kg/cm^2, 85 ~ 157 psi)
[62F-02]
A: 2,100 ~ 3,700 kPa
(21 ~ 37 kg/cm^2, 299 ~ 526 psi)
B: 600 ~ 1,100 kPa
(6 ~ 11 kg/cm^2, 85 ~ 157 psi)

4. Connect the leads to a battery to check the fluid discharge pressure during up-operation.

Trim and tilt up..... Blue (+)	**Green (–)**

NOTE:

The motor should not be operated for more than fourteen seconds after full tilt up-operation.

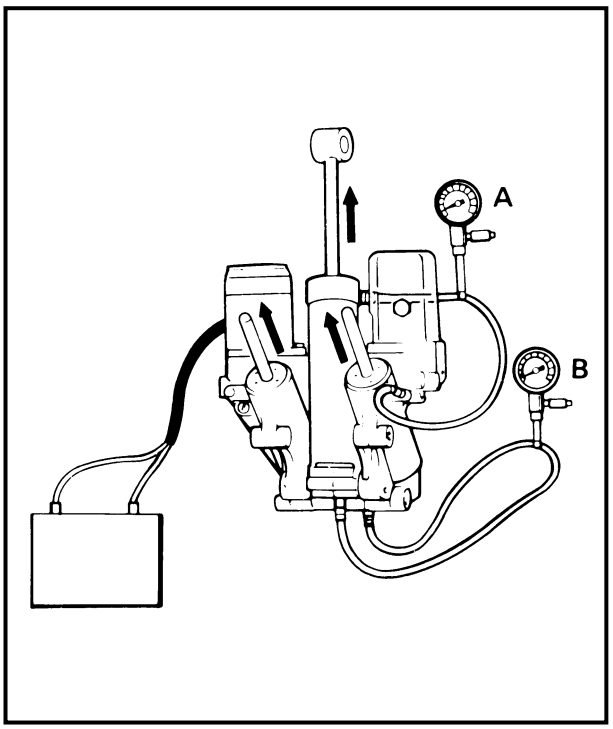

A: Tilt operating pressure
B: Trim operating pressure

During up operation pressure:
A: 0 ~ 500 kPa
(0 ~ 5 kg/cm², 0 ~ 71 psi)
B: 0 ~ 500 kPa
(0 ~ 5 kg/cm², 0 ~ 71 psi)
At the end of up-operation pressure:
A: 0 kPa (0 kg/cm², 0 psi)
[6H308]
B: 3,500 ~ 4,500 kPa
(35 ~ 45 kg/cm², 500 ~ 640 psi)
[6H1-15]
B: 9,000 ~ 11,000 kPa
(90 ~ 110 kg/cm², 1,280 ~ 1,565 psi)
[62F-02]
B: 5,690 ~ 6,570 kPa
(57 ~ 66 kg/cm², 299 ~ 526 psi)

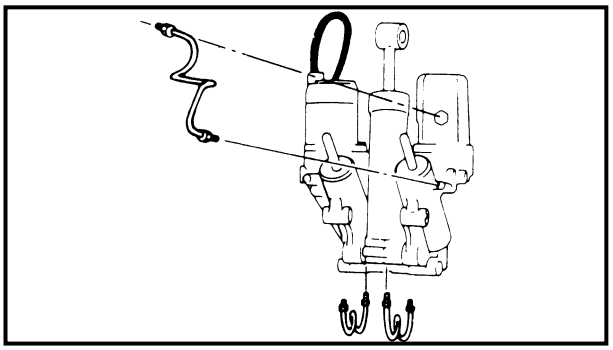

5. Remove the fluid pressure gauge and install the delivery pipes.

NOTE:
When the fluid pressure gauge has been removed, be sure to bleed the air from the system.

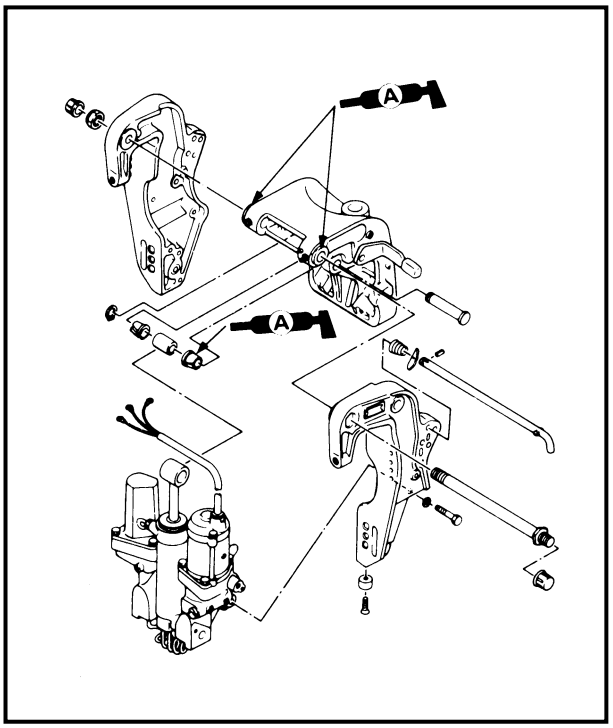

K56000-0

INSTALLATION

1. Referring to the illustration, install the power trim and tilt unit to the bracket.

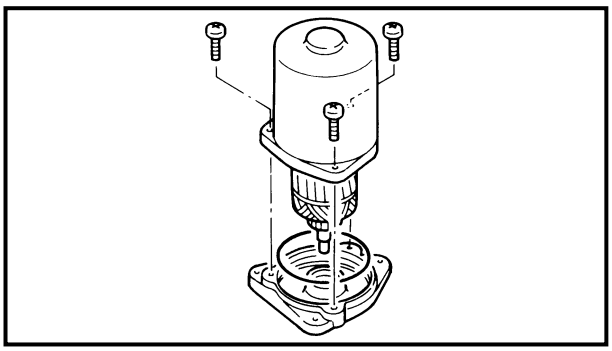

POWER TRIM AND TILT MOTOR
DISASSEMBLY
1. Loosen the screws and remove the stator, O-ring and the armature.

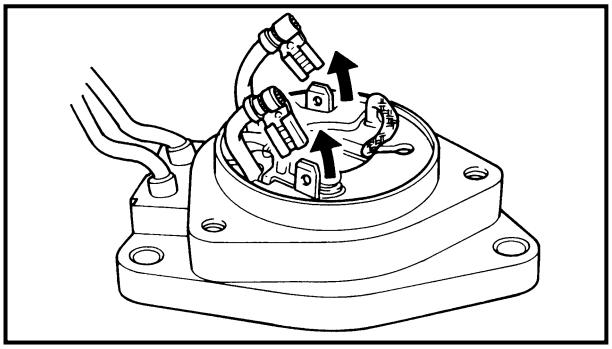

2. Disconnect the connector.

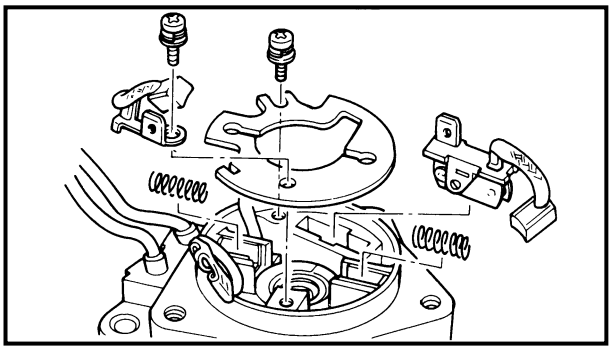

3. Loosen the screw and remove the brush, cover plate, circuit breaker and the spring.

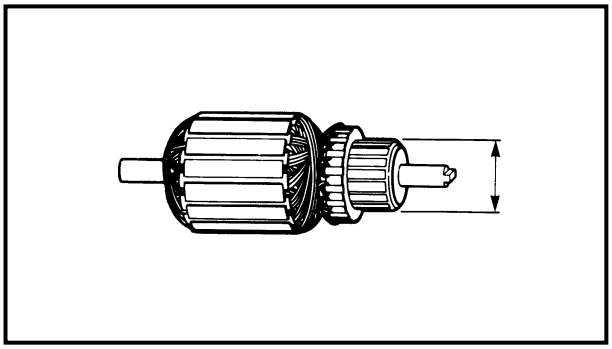

K62001-0*

INSPECTION
ARMATURE COIL
1. Visually inspect the commutator surface and if it shows signs of roughness, polish it with 600-grit wet-or-dry sandpaper.

2. Measure the outside diameter of the commutator by use of a vernier caliper. If the diameter is less than the specified minimum outside diameter, replace the whole armature.

Armature minimum outside diameter:
Standard: 22 mm (0.87 in)
Minimum: 21 mm (0.83 in)

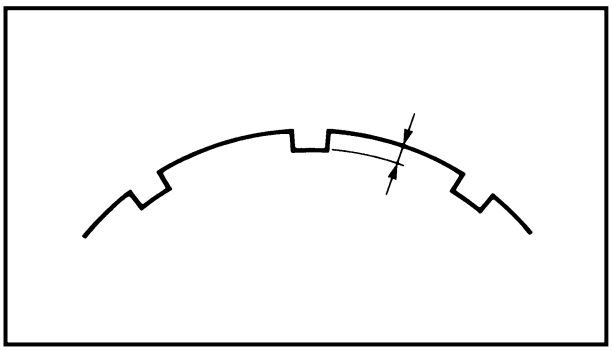

3. Scrape between the segments with a hack-saw blade and then carefully remove all particles of metal and mica with compressed air.

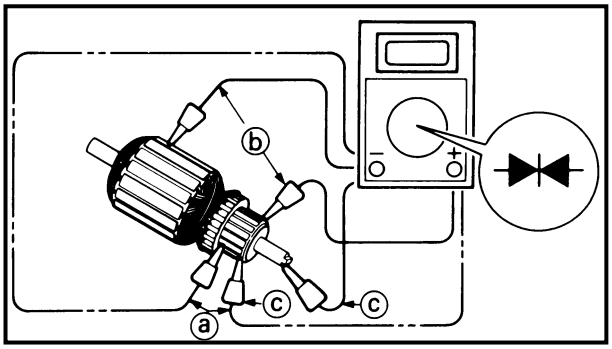

4. Check for continuity or discontinuity of the armature coil. If it is out of specification, replace the armature.

Armature coil continuity/ discontinuity	
Commutator segments ⓐ	**Continuity**
Segment-Laminations ⓑ	**Discontinuity**
Segment-Shaft ⓒ	**Discontinuity**

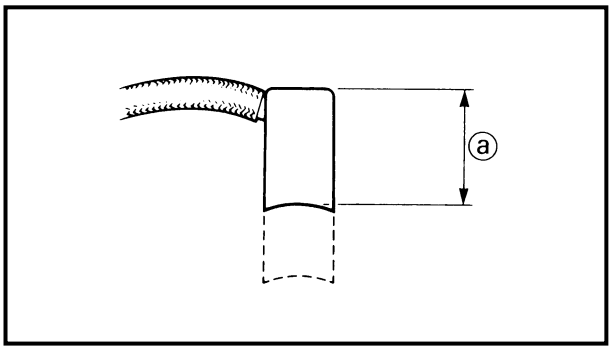

BRUSH

1. Measure the brushes for wear.

Brush, size ⓐ:
Standard: 9.8 mm (0.39 in)
Minimum: 4.8 mm (0.19 in)

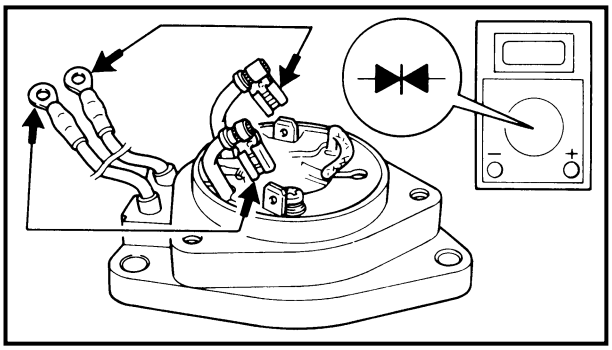

BASE ASSEMBLY

1. Inspect the base assembly for cracks or burns and replace the base assembly if such are found.
2. Check for continuity between the connector and lead wire. If there is discontinuity, replace the base assembly.

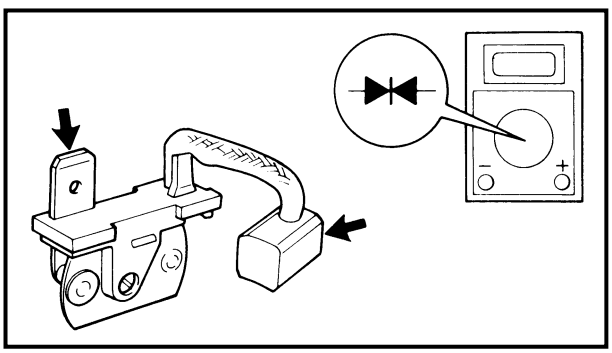

CIRCUIT BREAKER

1. Check for continuity between the brush and the terminal. If there is discontinuity, replace the circuit breaker.

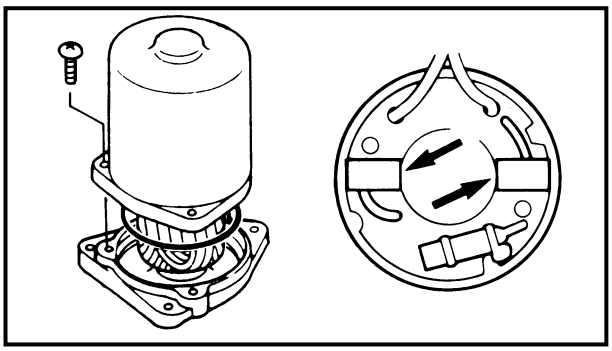

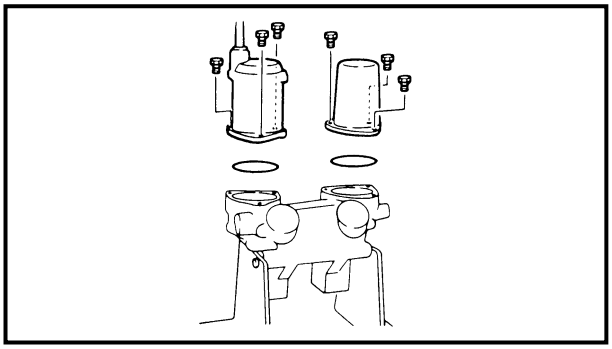

K63000-0*

ASSEMBLY

1. Install the armature into the frame-end.
2. Place the O-ring on the frame-end and install the yoke assembly, then install the screws.

Screw:
4 Nm (0.4 m • kg, 2.9 ft • lb)

3. Place the O-ring on the motor assembly and align the grooves of the motor assembly and gear pump, then install the bolts.

Power trim and tilt motor mounting bolt:
[Stamped mark]
[6H308]
6 Nm (0.6 m • kg, 4.3 ft • lb)
[6H1-15], [62F-02]
7 Nm (0.7 m • kg, 5.1 ft • lb)

CHAPTER 8
ELECTRICAL SYSTEMS

ELECTRICAL COMPONENTS 8-1

ELECTRICAL WIRING 8-3

WIRING DIAGRAM 8-7
REMOTE CONTROL BOX 8-12
DIGITAL METER 8-12

REMOVAL 8-13
MAGNETO BASE 8-13

ELECTRICAL ANALYSIS 8-15
INSPECTION 8-15
IGNITION SPARK GAP 8-16
CDI SYSTEM PEAK VOLTAGE 8-16
REPLACEMENT OF SPARK-PLUG CAP 8-20
CRANK POSITION SENSOR 8-20
STARTER RELAY 8-21
POWER TRIM AND TILT RELAY 8-21
TRAILER SWITCH 8-22
RECTIFIER/REGULATOR 8-23
FUSE 8-23
THERMO SWITCH 8-24
FUEL ENRICHMENT VALVE 8-24
OIL INJECTION SYSTEM (Oil injection model) 8-25
OIL-LEVEL SENSOR 8-26
OIL-LEVEL WARNING LAMP (L.E.D.) 8-28
WIRING HARNESS 8-28
BRACKET 8-29
BATTERY 8-29
ENGINE STOP SWITCH
(P60TH/60FEHTO, P75TH/75CEHTO, 90AEHD) 8-29
MAIN SWITCH (P60TH/60FEHTO, P75TH/75CEHTO, 90AEHD) 8-30
NEUTRAL SWITCH (P60TH/60FEHTO, P75TH/75CEHTO,
90AEHD, 90TR/90AETO, B90TR/90AETO) 8-30

INSTALLATION 8-30
FLYWHEEL MAGNETO 8-30

STARTER MOTOR 8-31
REMOVAL 8-31
DISASSEMBLY 8-31
INSPECTION 8-32
PINION 8-32
STARTER CLUTCH 8-32
BRUSH 8-32
BRUSH-HOLDER 8-32
ARMATURE 8-33
ASSEMBLY (50, 60, 70 hp) 8-34
INSTALLATION (50, 60, 70 hp) 8-35
ASSEMBLY (75, 80, 90 hp) 8-35
INSTALLATION (75, 80, 90 hp) 8-36

M20000-0

ELECTRICAL COMPONENTS

50, 60, 70 hp

① Ignition coil
② Spark-plug
③ Thermo switch
④ Power trim and tilt replay (PTT model)
⑤ Trailer switch (PTT model except for USA, Canada and Oceania model)
⑥ Neutral switch (P60TH/60FEHTO)
⑦ Starter relay
⑧ Oil warning lamp (50GETO)
⑨ Charge coil
⑩ Crank position sensor
⑪ Lighting coil
⑫ Pulser coil
⑬ Wire harness
⑭ Fuse
⑮ CDI unit
⑯ Starter motor
⑰ Trim sensor (PTT model)
⑱ Rectifier/regulator
⑲ Power trim and tilt connector assy (P60TH/60FEHTO)

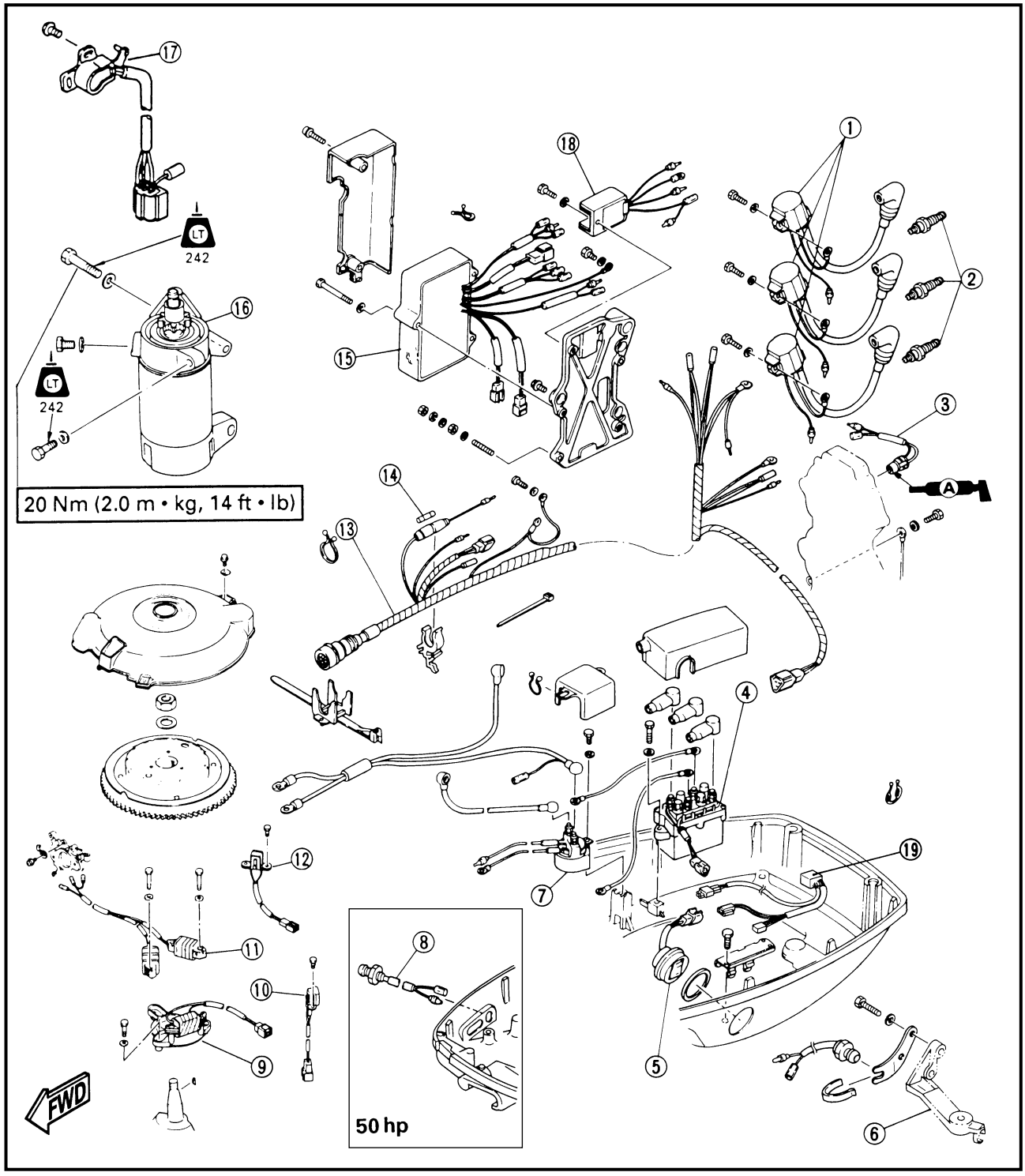

M20001-0

75, 80, 90 hp

① Ignition coil
② Spark-plug
③ Thermo switch
④ Trailer switch
(PTT model except for C75TR/75CET, C90TR/90AET)
⑤ Fuse
⑥ Wire harness
⑦ Neutral switch (P75TH/75CEHTO, 90AEHD, 90TR/90AETO, B90TR/90AETO)
⑧ Pulser coil
⑨ Stator assembly
⑩ CDI unit
⑪ Rectifier/regulator
⑫ Crank position sensor
⑬ Power trim and tilt relay (PTT model)
⑭ Starter relay
⑮ Starter motor
⑯ Trim sensor (PTT model)

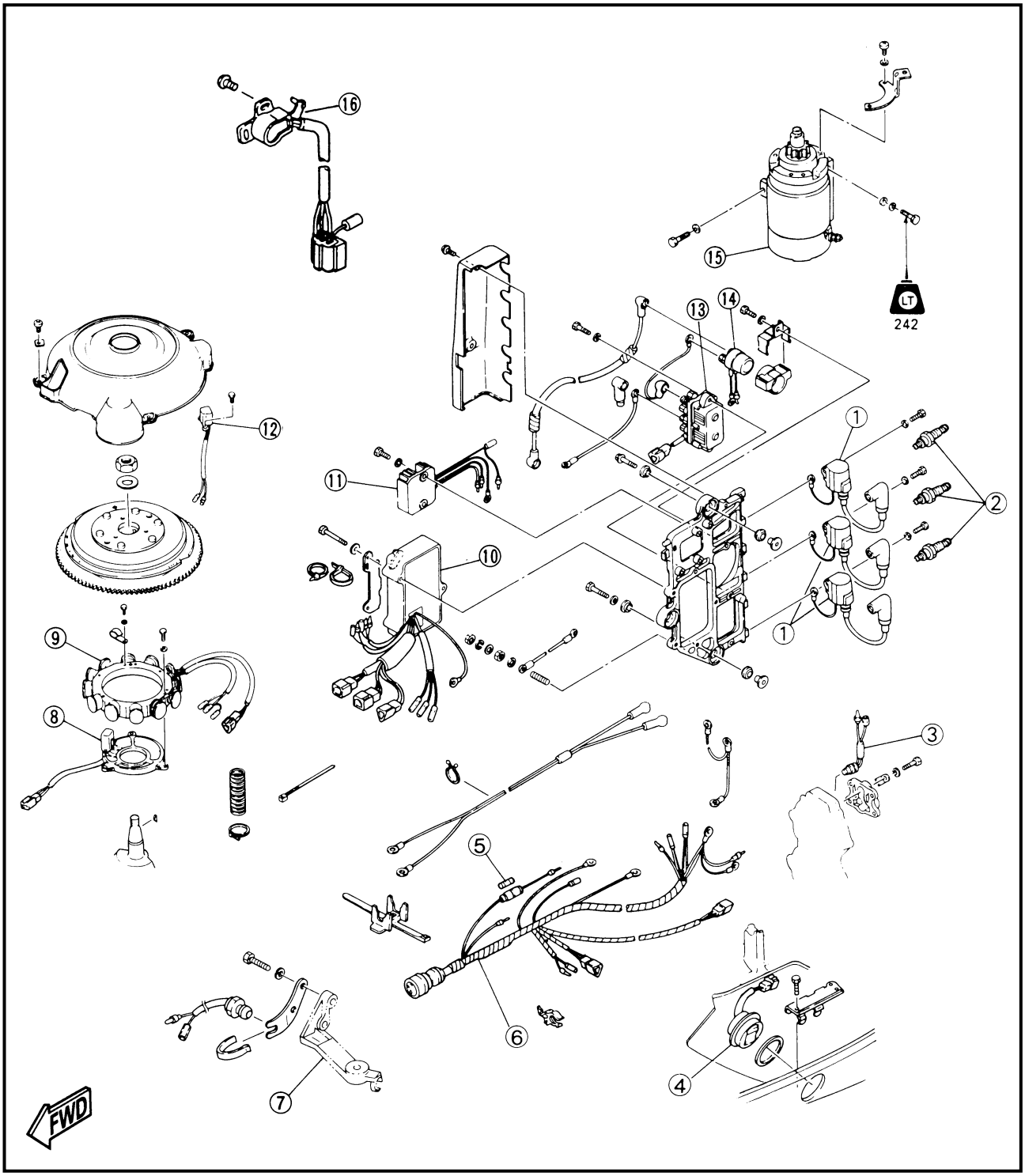

D22000-0

ELECTRICAL WIRING

Check that all leads and connectors are properly connected.

50, 60, 70 hp

① Electrothermal valve*1
② Clamp
③ Power trim and tilt motor lead*2
④ Trim sensor lead*2
⑤ Trailer switch coupler*2
⑥ Trailer switch*3
⑦ Fuel enrichment valve*4
[A] To wire harness
[B] To power trim and tilt motor*2
[C] To trim sensor*2
[D] To lighting coil
*1: Except for C60ER, C60TR
*2: For PTT model
*3: For PTT model except for USA, Canada and Oceania model
*4: For C60ER, C60TR

B : Black
L : Blue
Lg : Light green
R : Red
Sb : Sky blue

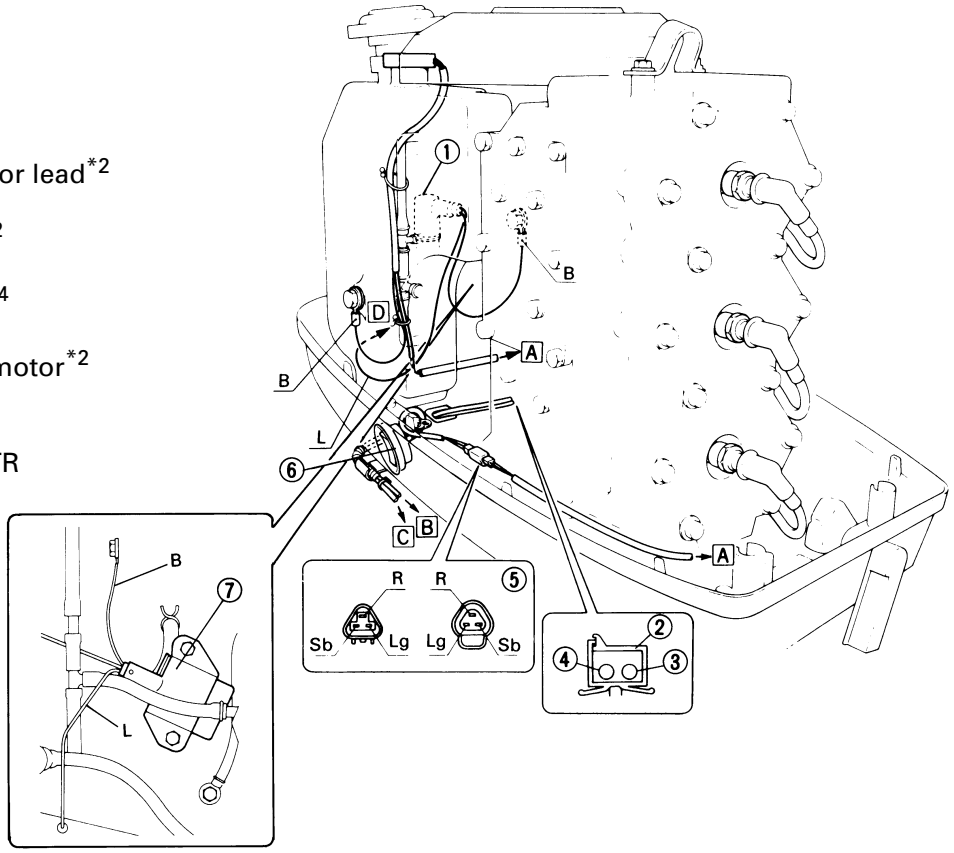

P60TH/60FEHTO*1, P75TH/75CEHTO, 90AEHD*2

① Main switch
② Engine stop switch
③ Neutral switch
④ Starter relay

[A] To battery
[B] To oil level sensor*1
[C] To trim sensor*1
[D] To power trim and tilt motor*1
[E] To power trim and tilt relay*1
[F] To thermo switch
[G] To 10P coupler
[H] To Main switch
[I] To power trim and tilt switch*1
[J] Throttle cable
[K] Shift cable

*1: Except for 90AEHD

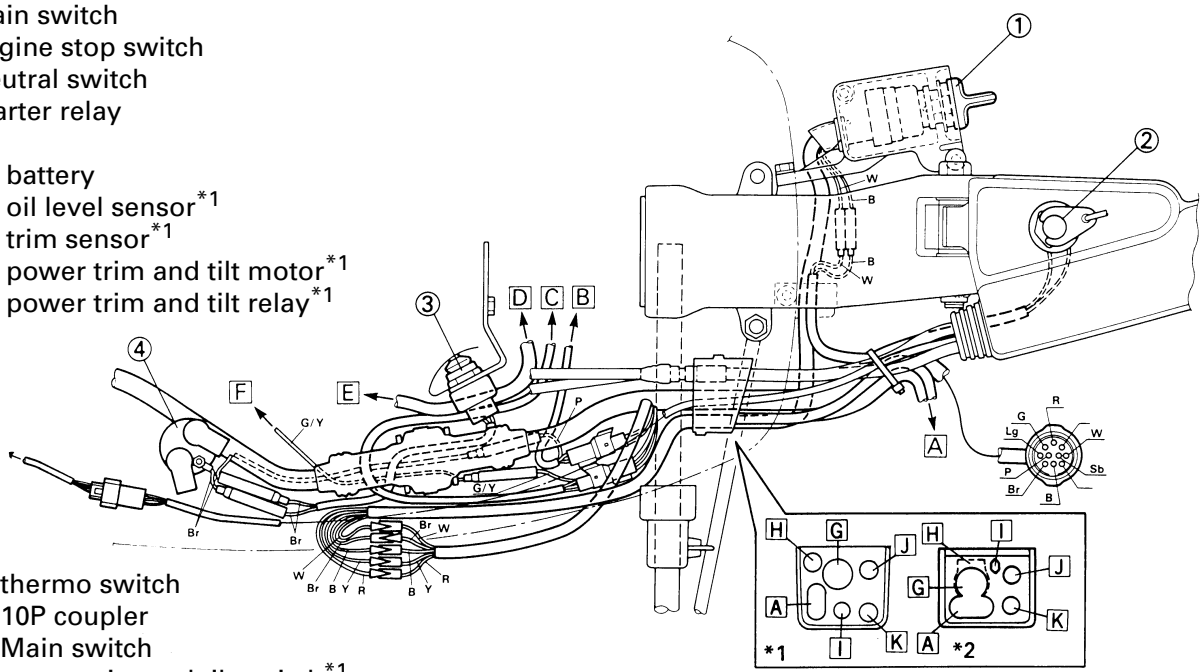

B : Black
Br : Brown
G : Green
G/Y : Green/Yellow
P : Pink
R : Red
W : White
Y : Yellow

50, 60, 70 hp

① Pulser coil coupler
② Trim sensor coupler*1
③ Oil level sensor coupler*2
④ Wire harness coupler (7P*3/10P*4)
⑤ Ground lead from rectifier/regulator
⑥ Ground lead from starter relay
⑦ Ground lead from wire harness
⑧ Power trim and tilt relay coupler*1
⑨ Charge coil coupler
⑩ Crank position sensor coupler

A To CDI unit
B To power trim and tilt motor*1
C To trim sensor*1
D To oil level sensor*2
E To meter
F To electrothermal valve*5
G To fuel enrichment valve*6
H To trailer switch coupler*1

B : Black
Br : Brown
G : Green
Gy : Gray
L : Blue
Lg : Light green
O : Orange
P : Pink
R : Red
Sb : Sky blue
W : White
Y : Yellow

*1: For PTT model
*2: For oil injection model
*3: For C60ER/60FED
*4: Except for C60ER/60FED
*5: Except for C60ER, C60TR
*6: For C60ER, C60TR

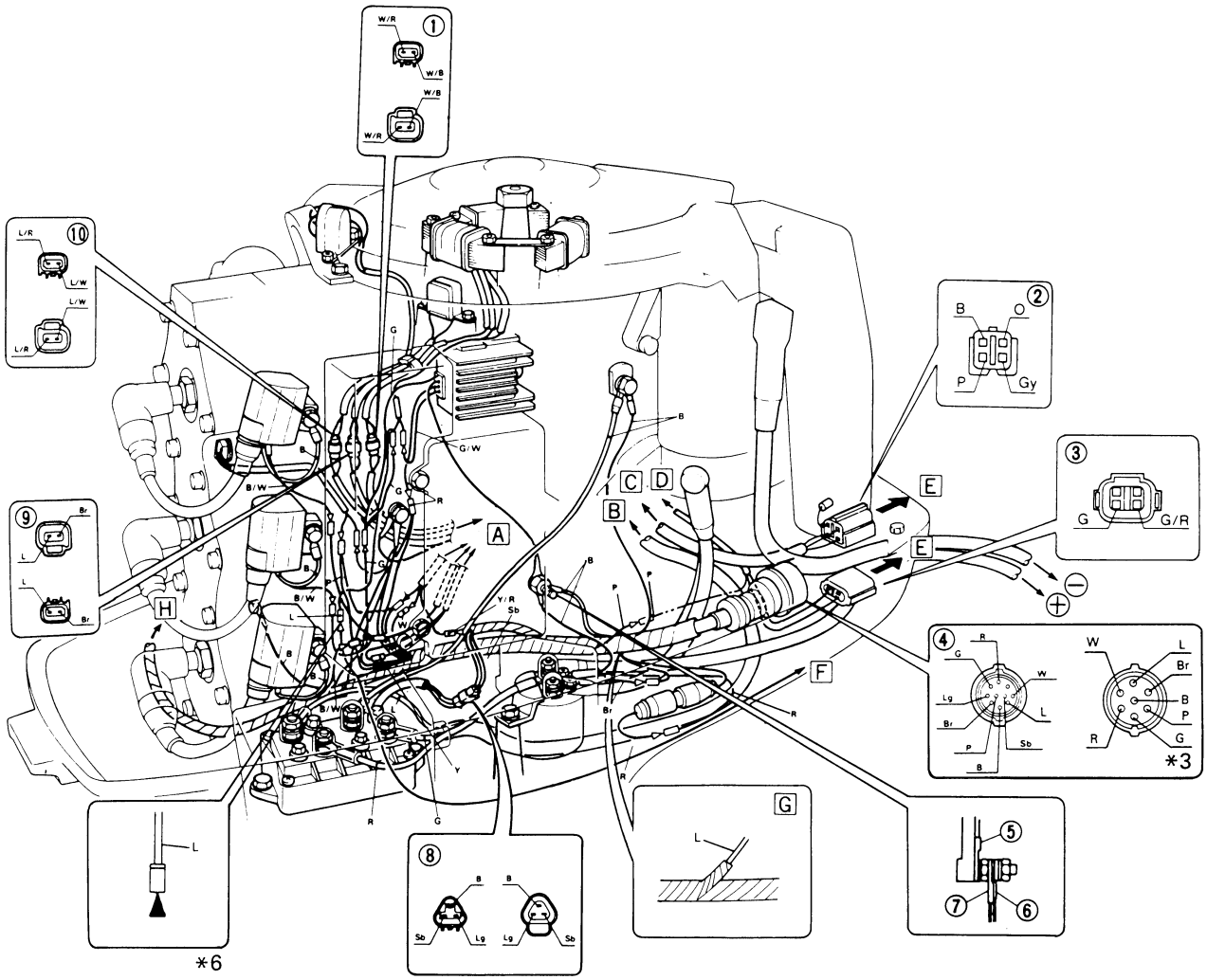

75, 80, 90 hp

① Trailer switch coupler*1

A To electrothermal valve*2
B To battery
C To starter relay
D To lighting coil
E To wire harness
F To meter
G To trim sensor*1
H To power trim and tilt motor*1
*1: For PTT model
*2: Except for C75TR

B : Black
L : Blue
Lg : Light green
R : Red
Sb : Sky blue

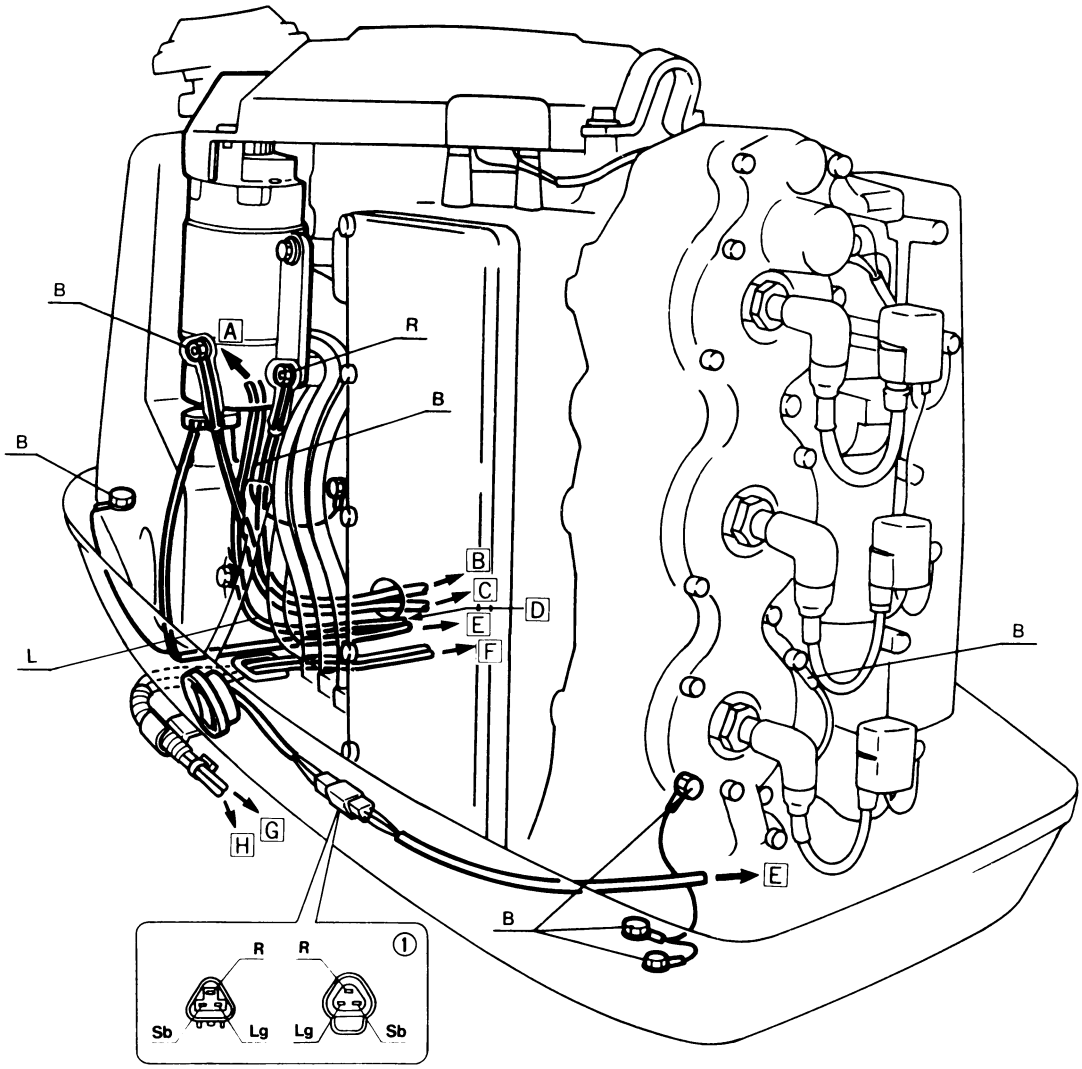

75, 80, 90 hp

① Crank position sensor coupler
② Fuel enrichment valve*1
③ Clamp
④ Clamp
⑤ Wire harness coupler
⑥ Trim sensor coupler*2
⑦ Oil level sensor coupler*3
⑧ Clamp
⑨ Ground lead from power trim and tilt relay*2
⑩ Ground lead from wire harness
⑪ Ground lead from rectifier/regulator
⑫ Charge coil coupler
⑬ Power trim and tilt relay coupler*2
⑭ Pulser coil coupler
⑮ Ground lead from starter relay
⑯ Ground lead from CDI unit

Ⓐ To electrothermal valve*4
Ⓑ To trim sensor*2
Ⓒ To power trim and tilt motor*2
Ⓓ To oil level sensor*3
Ⓔ To meter
Ⓕ To starter motor
Ⓖ To trailer switch*2
Ⓗ To neutral switch*5

B : Black
Br : Brown
G : Green
Gy : Gray
L : Blue
Lg : Light green
O : Orange
P : Pink
R : Red
Sb : Sky blue
W : White
Y : Yellow

*1: For C75TR
*2: For PTT model
*3: For oil injection model
*4: Except for C75TR
*5: For P75TH/75CEHTO, 90AEHD, 90TR/90AETO, B90TR/90AETO

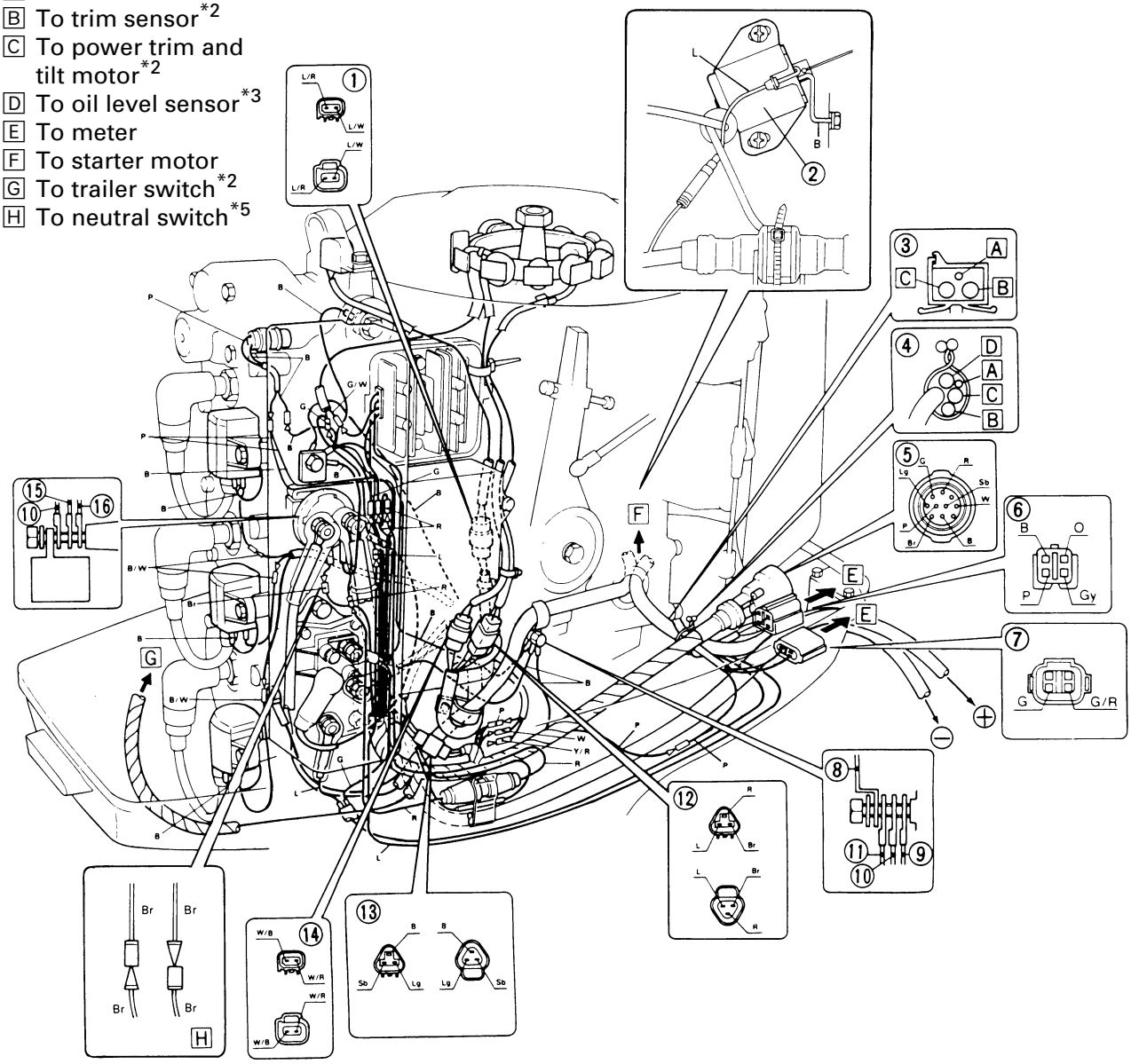

M30000-0

WIRING DIAGRAM

50, 60, 70 hp

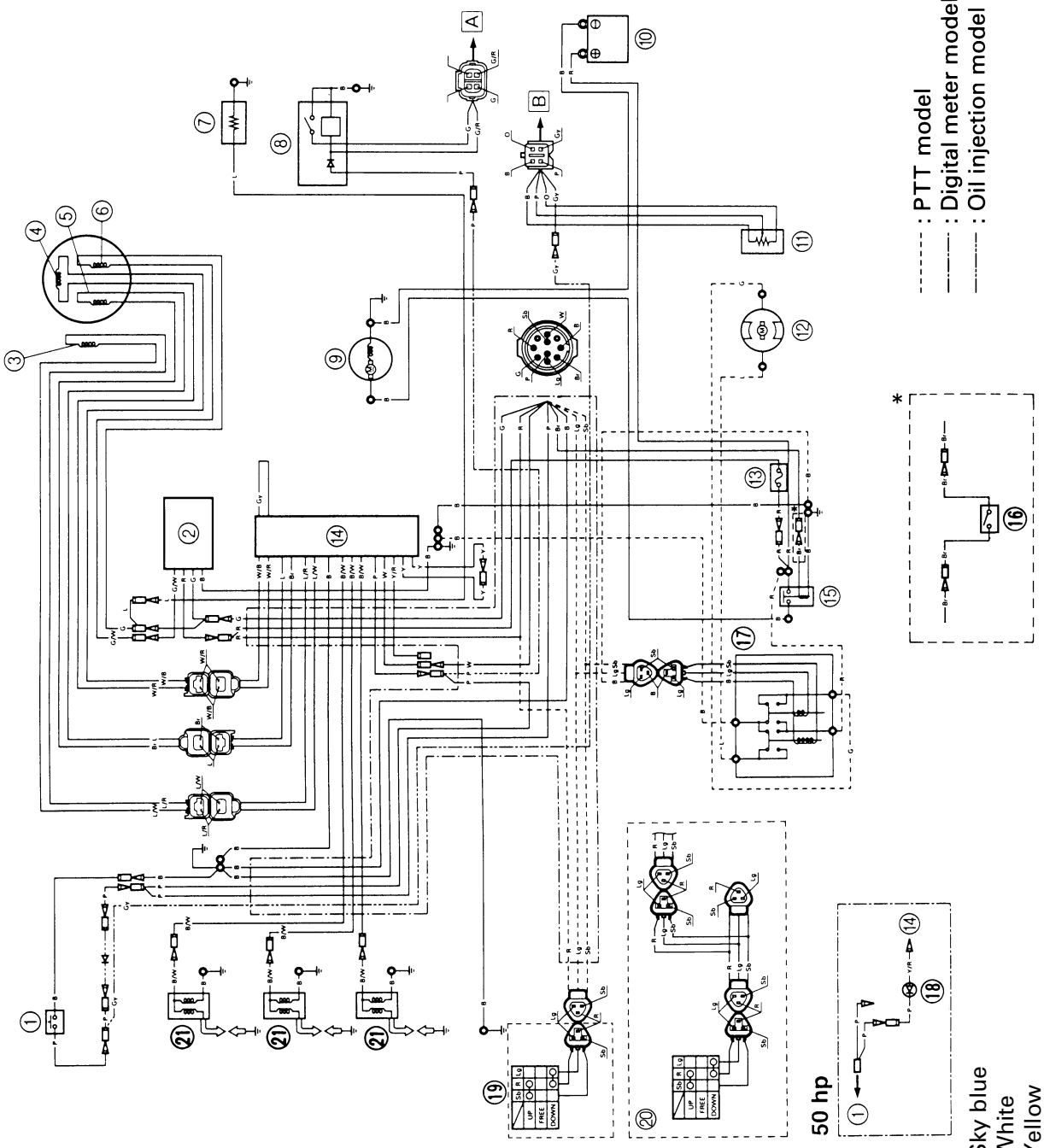

① Thermo switch
② Rectifier/regulator
③ Crank position sensor
④ Pulser coil
⑤ Charge coil
⑥ Lighting coil
⑦ Electrothermal valve (except for C60ER, C60TR)
⑧ Oil level sensor (oil injection model)
⑨ Starter motor
⑩ Battery
⑪ Trim sensor (PTT model)
⑫ Power trim and tilt motor (PTT model)
⑬ Fuse (20A)
⑭ CDI unit
⑮ Starter relay
⑯ Neutral switch (P60TH/60FEHTO)
⑰ Power trim and tilt relay (PTT model)
⑱ Oil warning lamp (50GETO)
⑲ Trailer switch (PTT model)
⑳ Power trim and tilt switch (P60TH/60FEHTO)
㉑ Ignition coil

Ⓐ To oil level gauge
Ⓑ To trim gauge

B .....Black
Br .....Brown
G .....Green
Gy .....Gray
L .....Blue
O .....Orange
P .....Pink
R .....Red
Sb .....Sky blue
W .....White
Y .....Yellow
Lg .....Light green

C60ER, C60TR

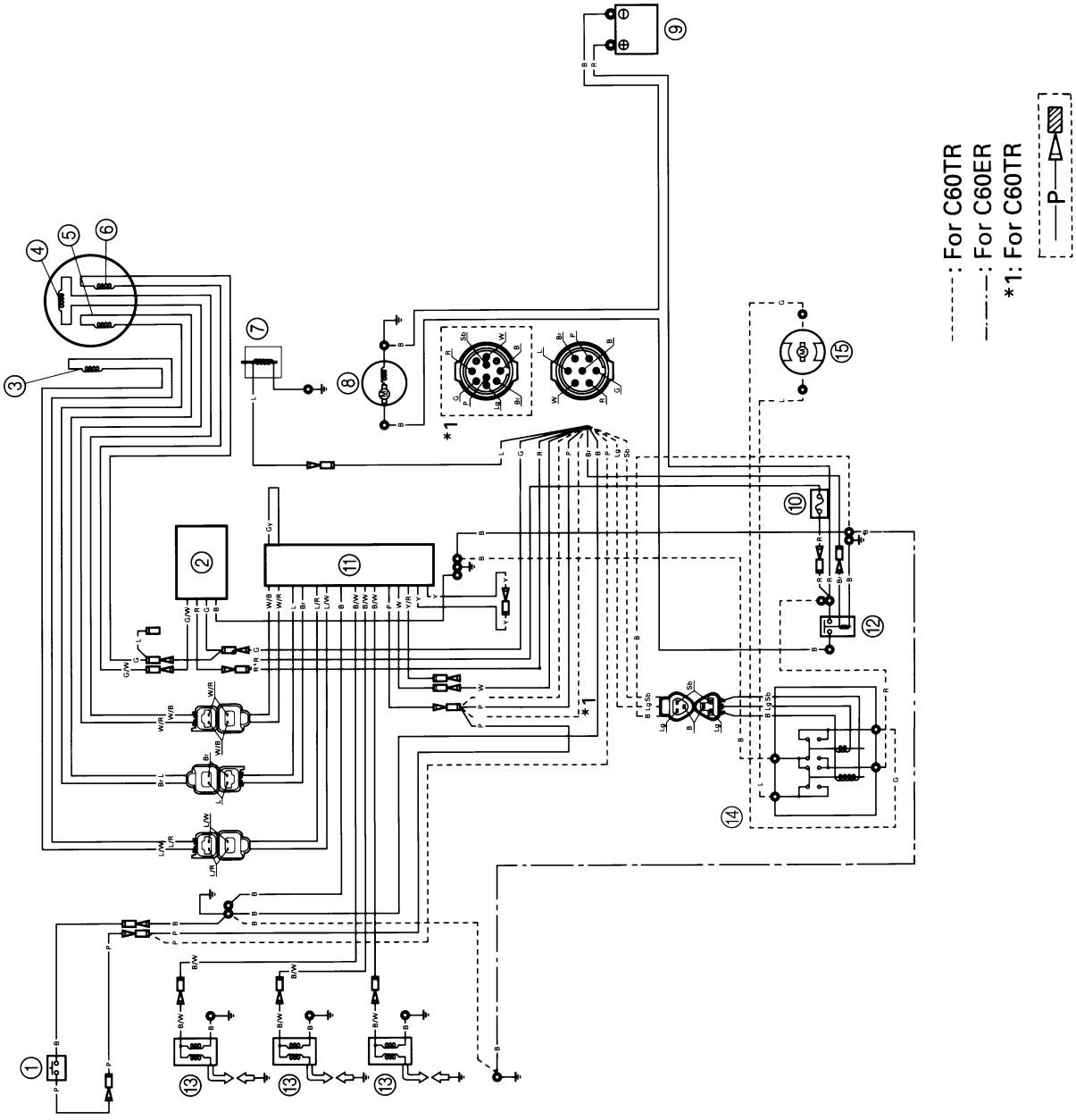

① Thermo switch
② Rectifier/regulator
③ Crank position sensor
④ Pulser coil
⑤ Charge coil
⑥ Lighting coil
⑦ Fuel enrichment valve
⑧ Starter motor
⑨ Battery
⑩ Fuse (20A)
⑪ CDI unit
⑫ Starter relay
⑬ Ignition coil
⑭ Power trim and tilt relay (For C60TR)
⑮ Power trim and tilt motor (For C60TR)

B..... Black
Br..... Brown
G..... Green
Gy..... Gray
L..... Blue
O..... Orange
P..... Pink
R..... Red
Sb..... Sky blue
W..... White
Y..... Yellow
Lg..... Light green

M30000-0

75, 80, 90 hp

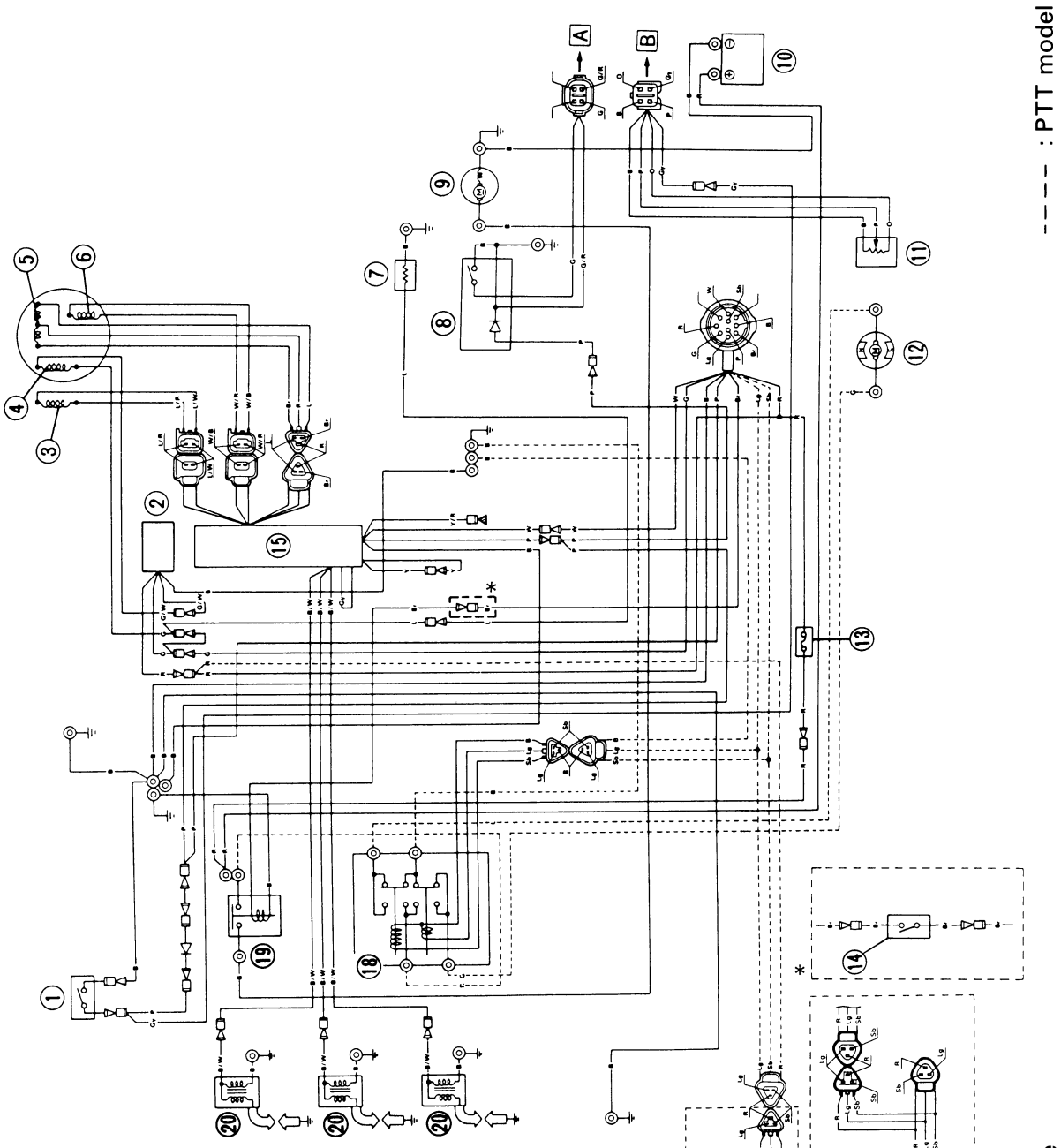

① Thermo switch
② Rectifier/regulator
③ Crank position sensor
④ Lighting coil
⑤ Charge coil
⑥ Pulser coil
⑦ Electrothermal valve (except for C75TR)
⑧ Oil level sensor (oil injection model)
⑨ Starter motor
⑩ Battery
⑪ Trim sensor (PTT model)
⑫ Power trim and tilt motor (PTT model)
⑬ Fuse (20A)
⑭ Neutral switch (P75TH/75CEHTO, 90AEHD, 90TR/90AETO, B90TR/90AETO)
⑮ CDI unit
⑯ Trailer switch (PTT model)
⑰ Power trim and tilt switch (P75TH/75CEHTO)
⑱ Power trim and tilt relay (PTT model)
⑲ Starter relay
⑳ Ignition coil

Ⓐ To oil level gauge
Ⓑ To trim gauge

B..... Black
Gr..... Brown
G..... Green
Gy..... Gray
L..... Blue
Lg..... Light green
O..... Orange
P..... Pink
R..... Red
Sb..... Sky blue
W..... White
Y..... Yellow

* : PTT model

C75TR

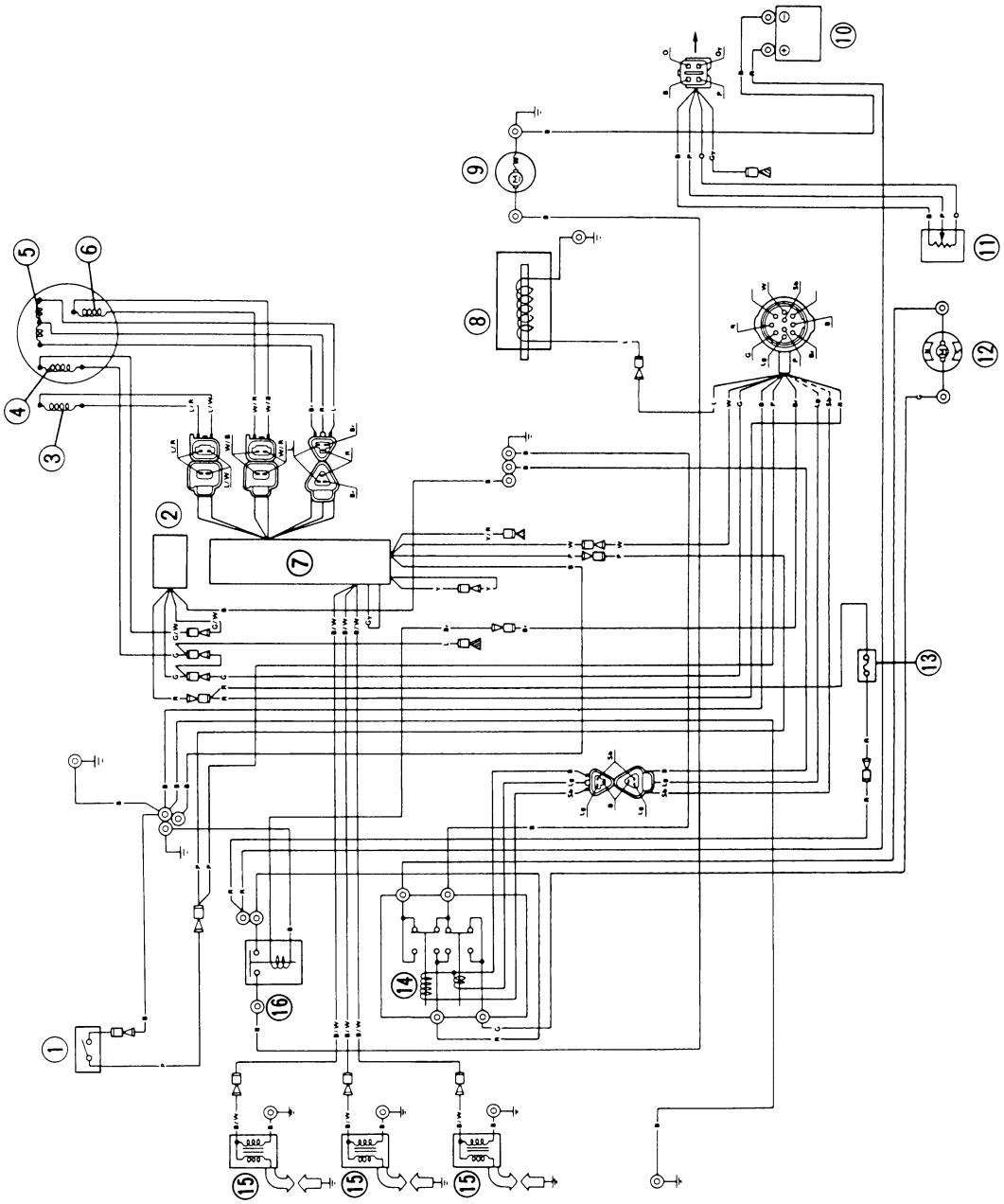

① Thermo switch
② Rectifier/regulator
③ Crank position sensor
④ Lighting coil
⑤ Charge coil
⑥ Pulser coil
⑦ CDI unit
⑧ Fuel enrichment valve
⑨ Starter motor
⑩ Battery
⑪ Trim sensor
⑫ Power trim and tilt motor
⑬ Fuse
⑭ Power trim and tilt relay
⑮ Ignition coil
⑯ Starter relay

B.....Black
Gr.....Brown
G.....Green
Gy.....Gray
L.....Blue
Lg.....Light green
O.....Orange
P.....Pink
R.....Red
Sb.....Sky blue
W.....White
Y.....Yellow

P60TH/60FEHTO

① Buzzer
② Fuse (10A)
③ Main switch
④ Engine stop switch

A To tachometer
B To power trim and tilt switch (option)
C To trim sensor
D To oil level sensor
E To lamp switch (option)

B .....Black
Br.....Brown
G.....Green
Gy.....Gray
G/R .....Green/Red
L .....Blue
O.....Orange
P .....Pink
R .....Red
Sb.....Sky blue
W.....White
Y .....Yellow
Lg .....Light green
G/W ....Green/White
P/B.....Pink/Black

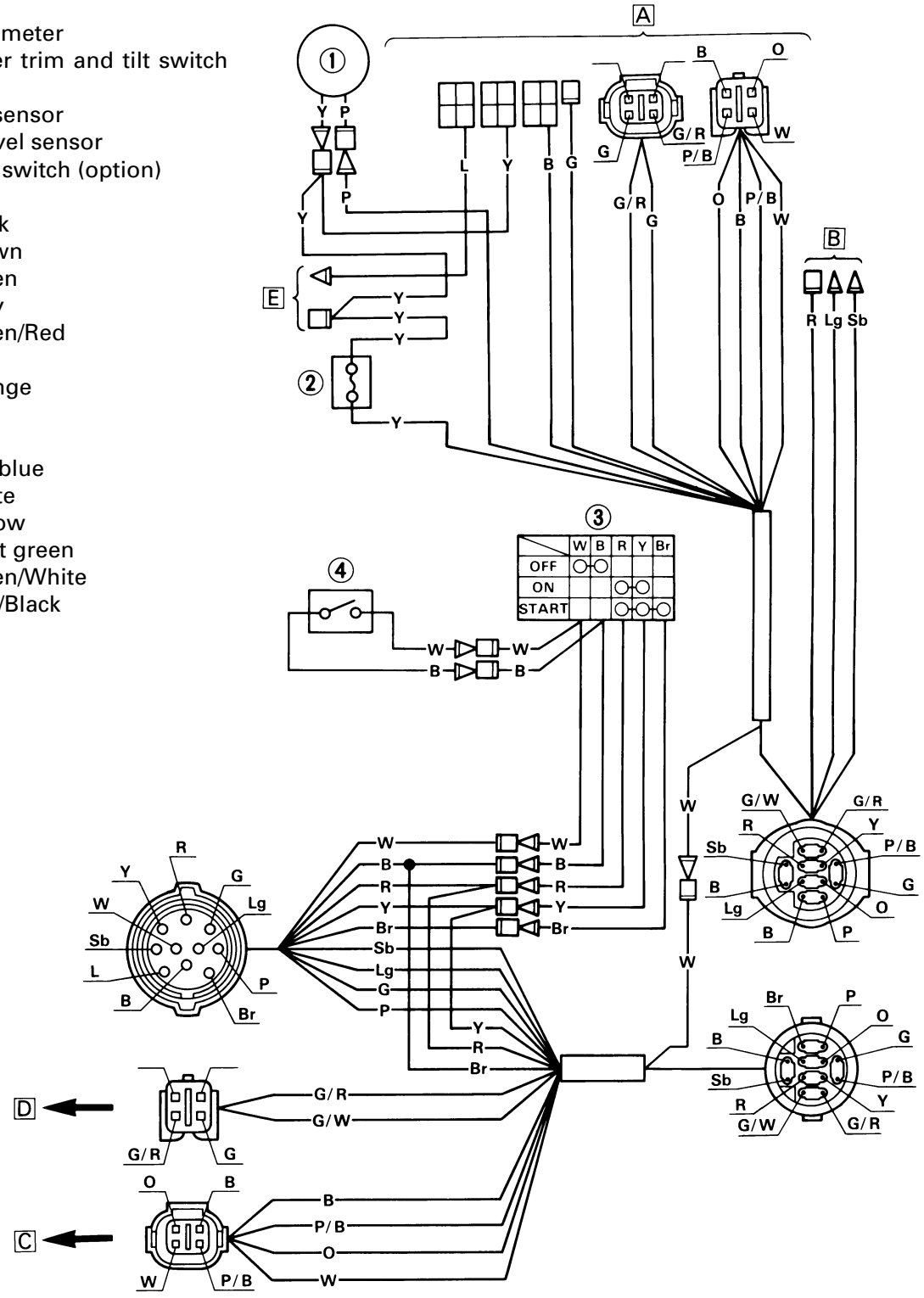

M31000-0

REMOTE CONTROL BOX

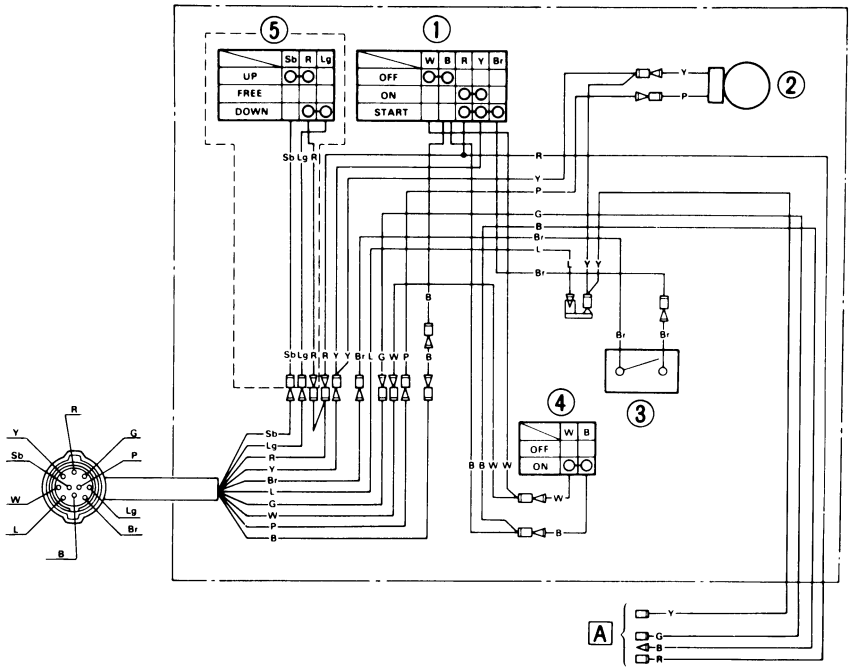

① Main switch
② Buzzer
③ Neutral switch
④ Engine stop switch
⑤ Power trim and tilt switch
[A] To meter harness

DIGITAL METER

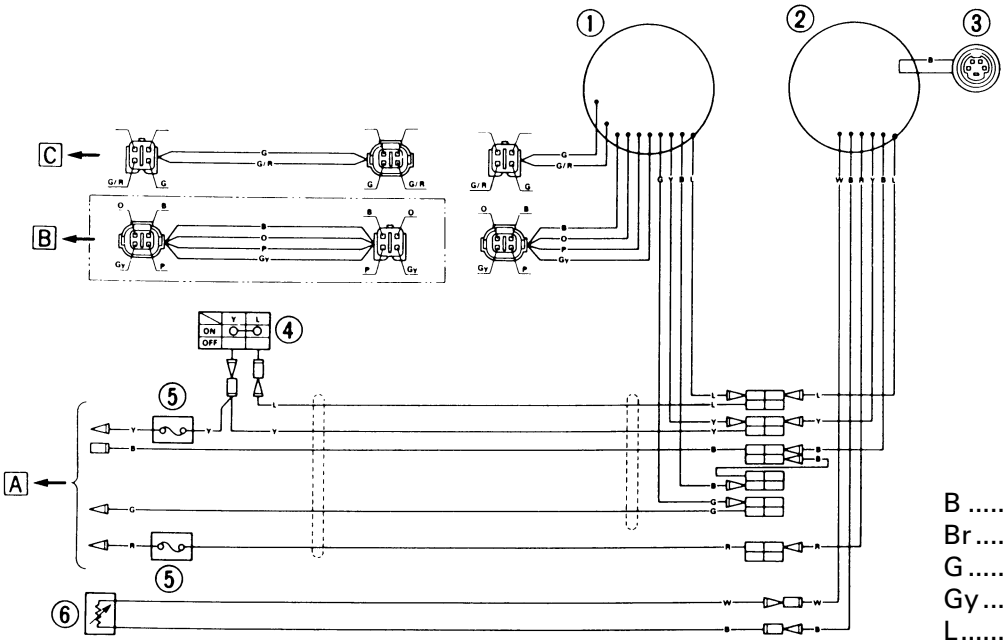

① Digital tachometer
② Digital speedometer (option)
③ To fuel management meter (option)
④ Lamp switch (option)
⑤ Fuse (10A)
⑥ Fuel sensor (option)

[A] To remote control box
[B] To trim sensor
[C] To oil level gauge

B ..... Black
Br ..... Brown
G ..... Green
Gy ..... Gray
L ..... Blue
Lg ..... Light green
O ..... Orange
P ..... Pink
R ..... Red
Sb ..... Sky blue
W ..... White
Y ..... Yellow

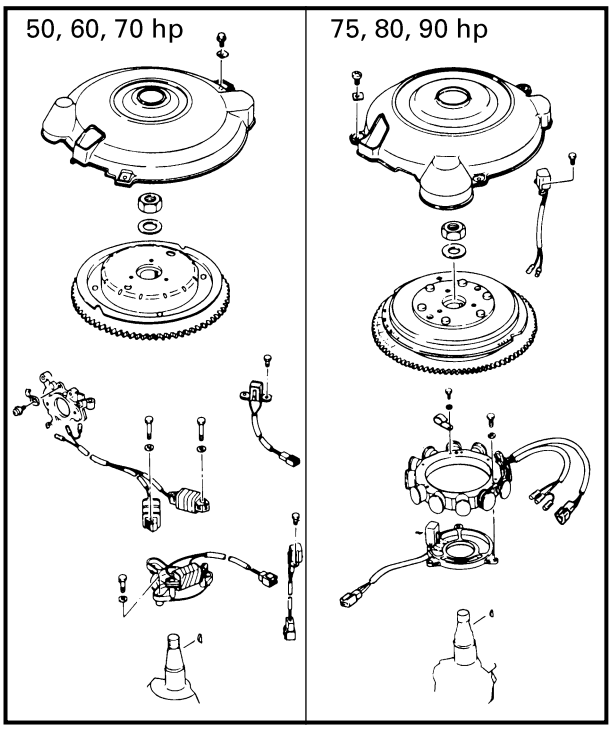

M40003-0

REMOVAL

MAGNETO BASE

1. Remove the flywheel cover.
2. Remove the starter-pulley.

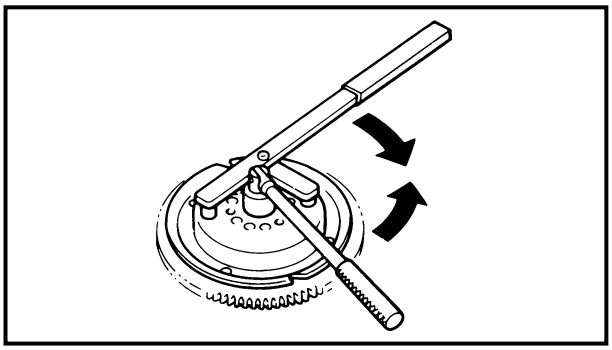

3. Loosen the flywheel nut until it is flush with the crankshaft.

	**Flywheel holder: YB-6139/90890-06522**

CAUTION:

The major load must be carried in the direction of the arrows. If not, the holder may easily slip off.

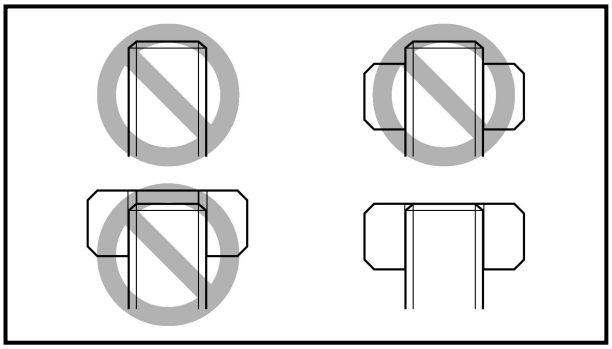

CAUTION:

Keep the nut side flush with the crankshaft end until the flywheel comes off the tapered portion of the crankshaft.

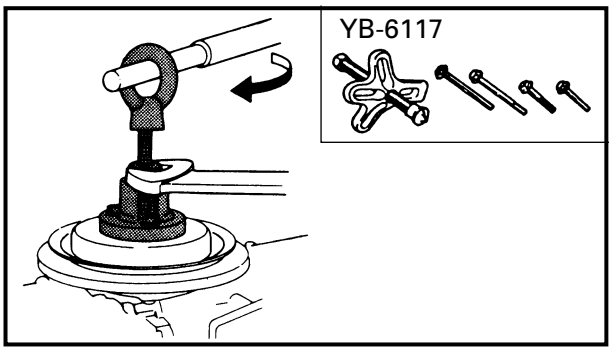

4. Remove the flywheel magneto.

	Flywheel puller: YB-6117/90890-06521

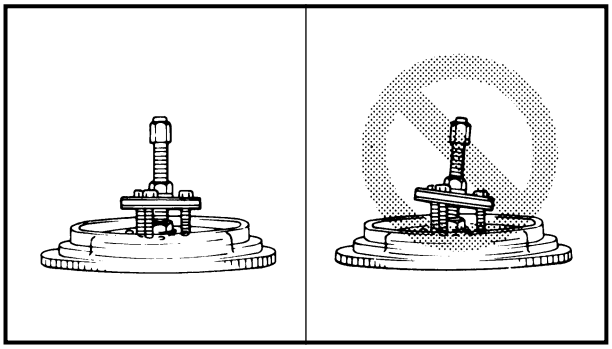

CAUTION:

To prevent damage to the engine or tools, screw in the flywheel magneto-puller set-bolts evenly and completely so that the puller plate is parallel to the flywheel.

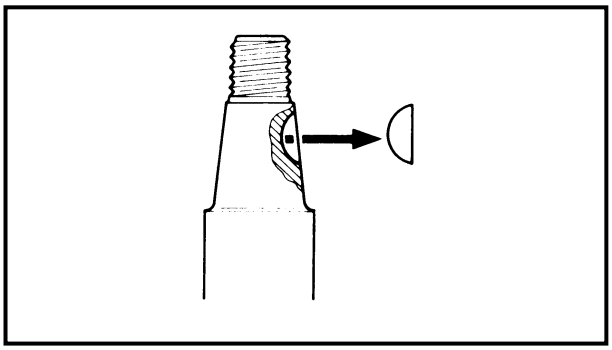

5. Remove the woodruff key from the crankshaft keyway using a screwdriver.

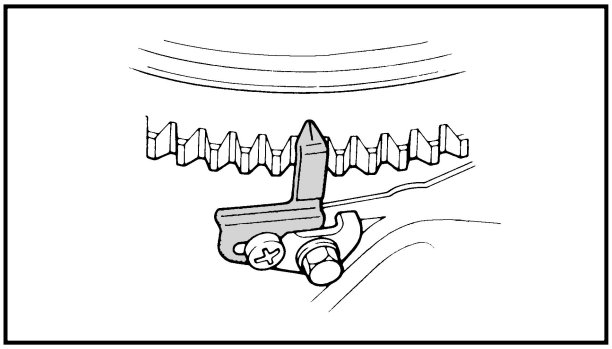

CAUTION:

Take special care not to damage the surface of the crankshaft. When removing the flywheel magneto, lift it up while tilting it slightly. Do not allow the magneto to contact the timing plate.

ELECTRICAL ANALYSIS
INSPECTION

CAUTION:

All measuring instruments should be handled with special care or the correct measurement is impossible.
On an instrument powered by dry batteries, the latter should be checked for voltage periodically and replaced, if necessary.

NOTE:

" ○——○ " indicates the terminals between which there is a continuity of electricity; i.e., a closed circuit at the respective switch position.

Peak voltage measurement

NOTE:

- The coil output varies greatly at cranking speed.
- Cranking a cold engine with the plugs in and a weak battery does not enable proper readings.



Digital multimeter:
J-39299/90890-06752
Peak volt adapter:
YU-39991/90890-03169

Low resistance measurement

When measuring a resistance of 10 Ω or less using the digital tester, the correct measurement cannot be obtained because of the tester's internal resistance.
To obtain the correct value, subtract this internal resistance from the displayed measurement.



Correct value =
Displayed measurement –
Internal resistance

NOTE:

The internal resistance of the tester can be obtained by connecting both of its terminals.

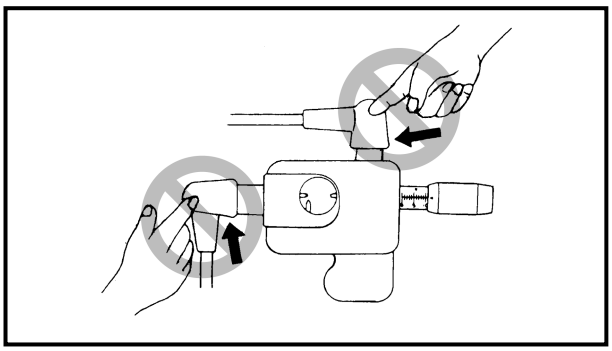

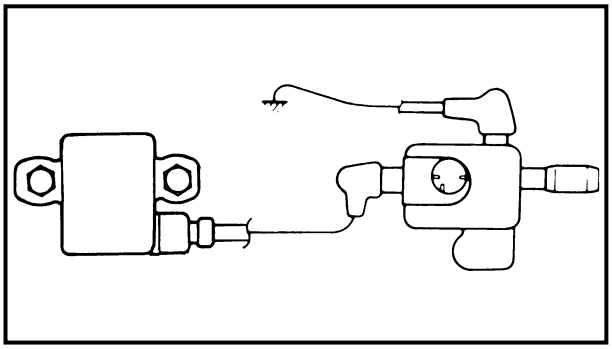

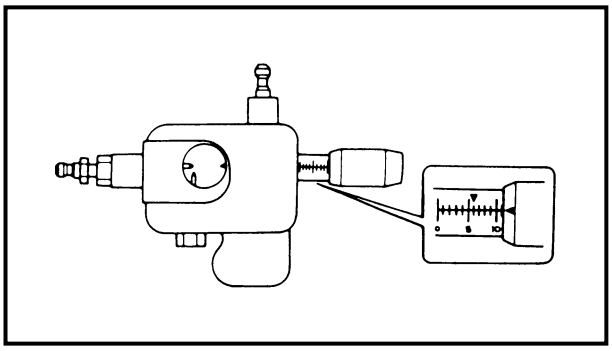

IGNITION SPARK GAP

⚠ WARNING

- **While checking the spark be careful not to touch any connection of lead wires of the "Ignition spark gap tester".**
- **When doing the spark test, take special care not to allow leakage from the plug cap which has been removed.**

This check is likely to produce sparks, so be sure that no flammable gas or fluid is present.

1. Ignition spark gap:
   1) Adjust the spark gap to specification by turning the adjusting knob.



Spark gap tester:
YM-34487/90890-06754

   2) Connect the spark plug cap to the spark gap tester.
   3) Remove the spark plugs from the engine.
   4) Crank the engine and check the sparks from the ignition system through the discharge window.
   5) Measure the ignition spark gap.
   6) If the output is out of specification, measure the CDI SYSTEM PEAK VOLTAGE.



Spark gap:
9 mm (0.35 in)

CDI SYSTEM PEAK VOLTAGE

⚠ WARNING

While taking CDI unit check be careful not to touch any connection of lead wires of the "Digital tester".

NOTE:

- If there is no spark or the spark is weak, continue with the CDI test.
- If a good spark is obtained, the problem is not with the CDI system, but possibly the spark plug or other component is defective.

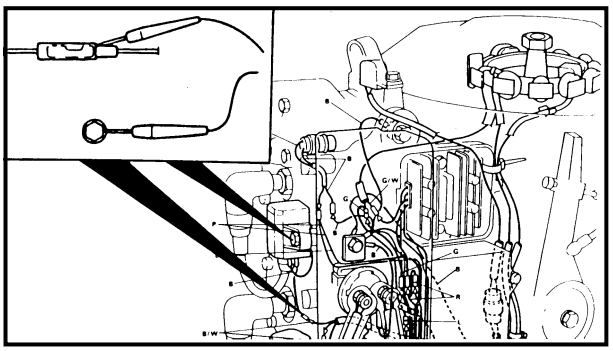

1. CDI unit output:
   1) Connect the tester to the CDI unit as shown.
   2) Set the tester dial to specification.
   3) Crank or start the engine.
   4) Measure all the CDI unit output.
   5) If the output is beyond specification, replace the ignition coil.
   6) If the output is below specification, measure the charge coil output.

50, 60, 70 hp

CDI unit
Output peak voltage (minimum)
B/W – B

r/min	Cranking		1,500	3,500
	Open	Connect		
V	—	#1, 3: 105 #2: —	145	105

75, 80, 90 hp

CDI unit
Output peak voltage (minimum)
B/W – B

r/min	Cranking		1,500	3,500
	Open	Connect		
V	—	#1, 3: 130 #2: —	155	130

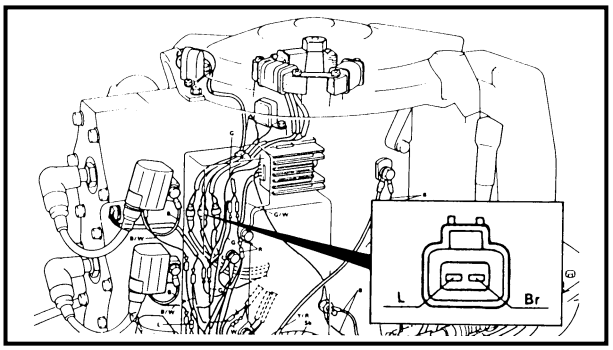

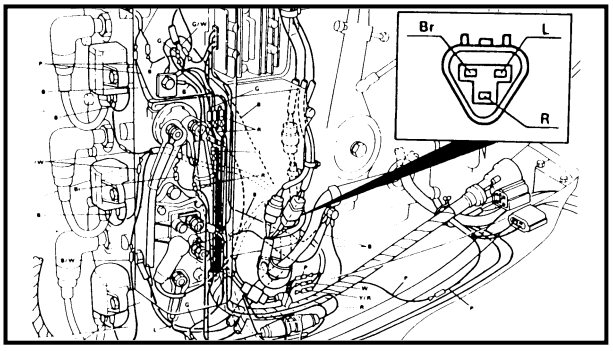

2. Charge coil output:
   1) Disconnect the charge coil coupler. Connect the 2/3 pins test harness.

50, 60, 70 hp
2 pins test harness:
YB-38831/90890-06767
75, 80, 90 hp
3 pins tester harness:
YB-06443/90890-06757

   2) Connect the tester to the measurement terminal.
   3) Set the tester dial to specification.
   4) Crank or start the engine.
   5) Measure the charge coil output.
   6) If the output is below specification, replace the charge coil.
   7) If the output is beyond specification, measure pulser coil output.

50, 60, 70 hp

Charge coil
Output peak voltage (minimum)
Br – L

r/min	Cranking		1,500	3,500
	Open	Connect		
V	120	150	160	120

75, 80, 90 hp

Charge coil
Output peak voltage (minimum)
R – Br

r/min	Cranking		1,500	3,500
	Open	Connect		
V	55	60	170	150

Charge coil
Output peak voltage (minimum)
R – L

r/min	Cranking		1,500	3,500
	Open	Connect		
V	90	100	135	135

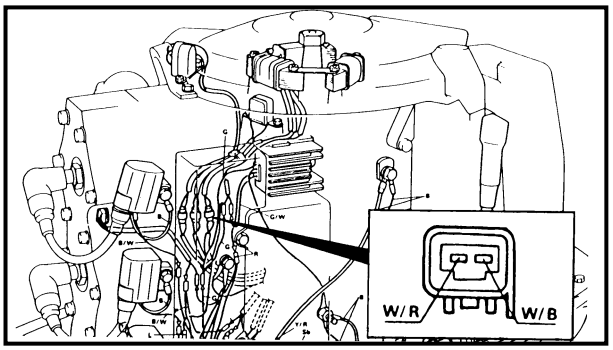

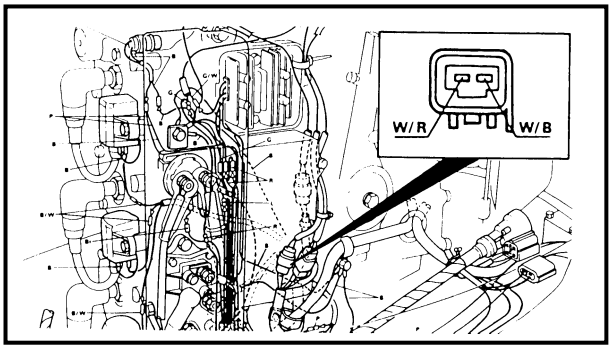

3. Pulser coil output:
   1) Disconnect the pulse coil couple. Connect the 2 pins test harness.

2 pins test harness:
YB-38831/90890-06767

   2) Connect the tester to the measurement terminal.
   3) Set the tester dial to specification.
   4) Crank or start the engine.
   5) Measure the pulser coil output.
   6) If the output is beyond specification, replace CDI unit.
   7) If the output is below specification, replace pulser coil.

50, 60, 70 hp

Pulser coil Output peak voltage (minimum) W/R – W/B				
r/min	Cranking		1,500	3,500
	Open	Connect		
V	4.5	2.5	6.5	10

75, 80, 90 hp

Pulser coil Output peak voltage (minimum) W/R – W/B				
r/min	Cranking		1,500	3,500
	Open	Connect		
V	7.0	5.0	14	20

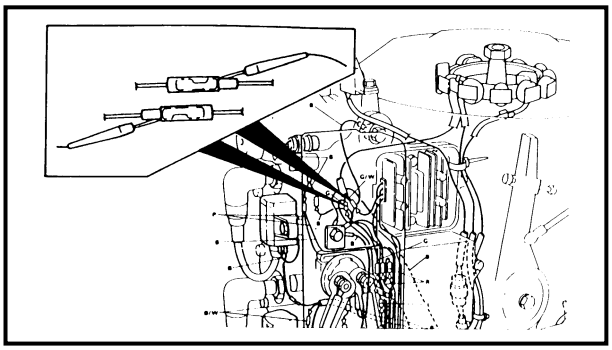

4. Lighting coil output:
   1) Connect the tester to the lighting coil as shown.
   2) Set the tester dial to specification.
   3) Start the engine.
   4) Measure the lighting coil output.
   5) If the output is beyond specification, replace rectifier/regulator.
   6) If the output is below specification, replace lighting coil.

50, 60, 70 hp

Lighting coil Output peak voltage (minimum) G – G/W				
r/min	Cranking		1,500	3,500
	Open	Connect		
V	8.5	8.0	25	25

75, 80, 90 hp

Lighting coil Output peak voltage (minimum) G – G/W				
r/min	Cranking		1,500	3,500
	Open	Connect		
V	10	11	25	25

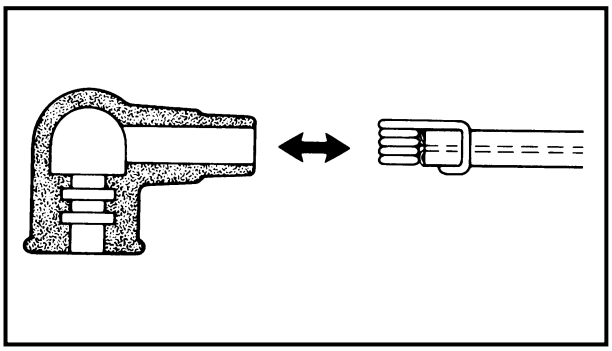

M53005-0

REPLACEMENT OF SPARK-PLUG CAP

[Standard type]

1. Remove the spark-plug cap by pulling the cap and remove the plug-cap spring from the high-tension cable.

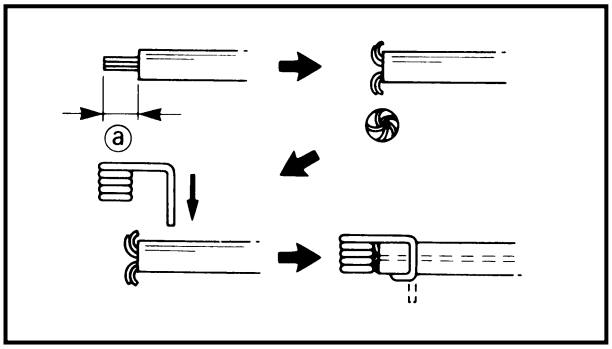

2. Cut an amount of about ⓐ off the end of the high-tension cable.

	Distance ⓐ: **5 mm (0.2 in)**

3. Fit onto the plug cap-spring.
4. Push the cap-spring into the plug-cap.

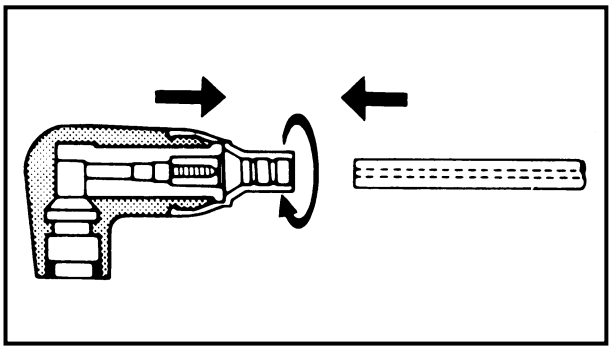

[Resistance specification type]

1. Remove the spark-plug cap by turning the cap.
2. Install the spark-plug cap onto the high-tension cable.

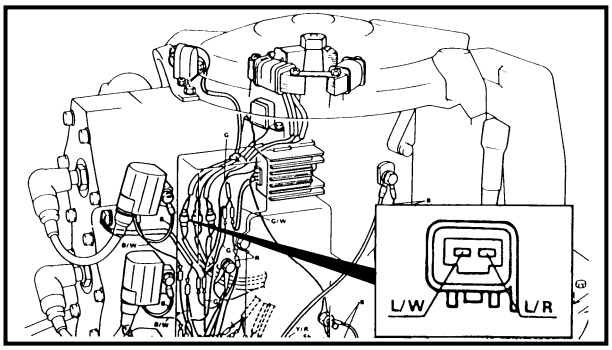

CRANK POSITION SENSOR

Measure the peak voltage of the crank position sensor as shown.

50, 60, 70 hp

	Crank position sensor **Output peak voltage (minimum)** **L/R – L/W**			
r/min	**Cranking**		**1,500**	**3,500**
	Open	**Connect**		
V	**5.0**	**5.0**	**20**	**16**

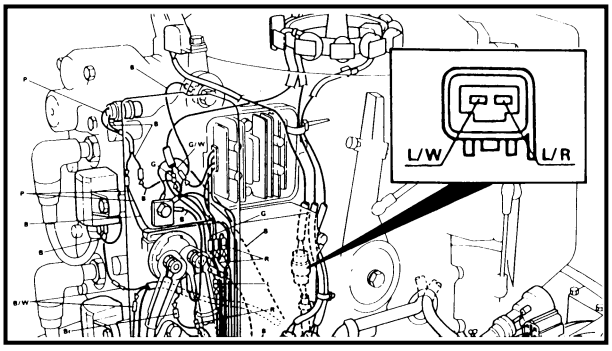

75, 80, 90 hp

	Crank position sensor **Output peak voltage (minimum)** **L/R – L/W**			
r/min	**Cranking**		**1,500**	**3,500**
	Open	**Connect**		
V	**5.5**	**5.5**	**25**	**20**

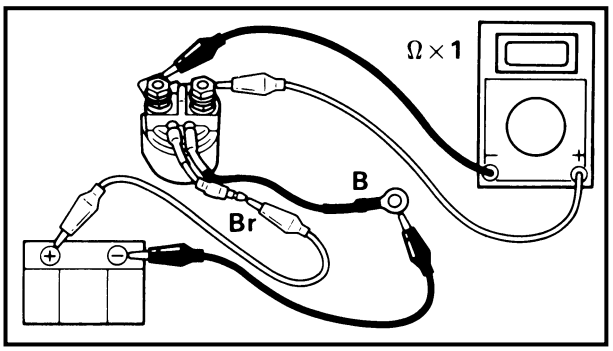

M55000-0

STARTER RELAY

1. Check for continuity between the terminals and the ends of the black and brown leads.

2. Test to ensure there is no continuity between terminals.

3. Check the relay operation.
   1) Connect a tester between the terminals of the starter relay. Connect the leads of the starter-relay to a 12-V battery.

Brown lead	**(+)**
Black lead	**(–)**

Battery voltage:
12V

B : Black
Br : Brown

4. Check that there is continuity between the starter relay terminals. If the operation is not as specified, replace the starter relay.

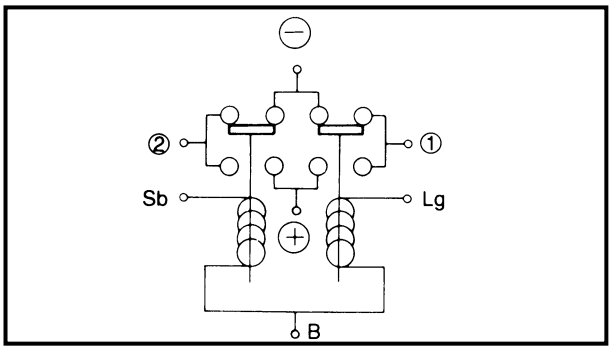

M51410-0

POWER TRIM AND TILT RELAY

1. Check the relay for terminal looseness and for wiring rust and corrosion. Replace the relay if any of the three defects is found.

2. Connect the (+) terminal and ① terminal and the (+) terminal and ② terminal to the tester and check that the resistance becomes ∞ in each case.

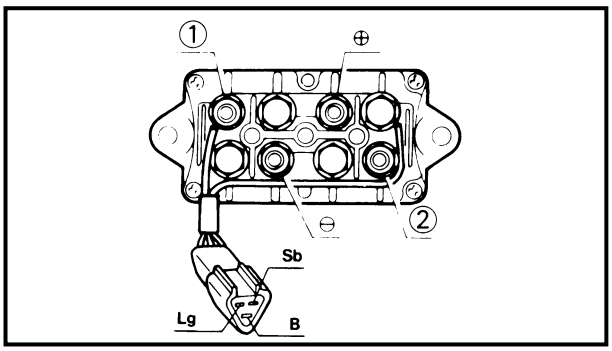

3. Connect the (–) terminal and ① terminal and the (–) terminal and ② terminal to the tester and check the continuity in each case.

Sb : Sky blue
Lg : Light green
B : Black

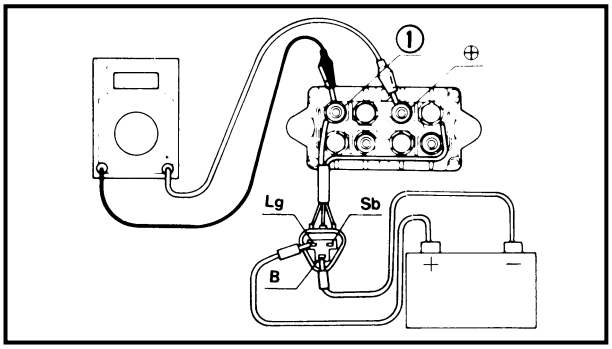

4. Connect the black terminal to the (–) terminal of the battery and the light green terminal to the (+) terminal of the battery. Then, connect the (+) terminal and ① terminal to the tester and check the continuity.

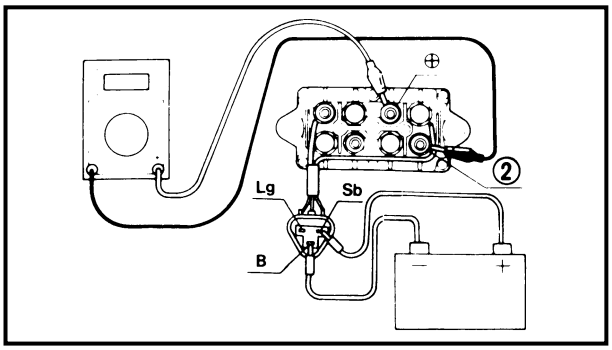

5. Connect the black terminal to the (–) terminal of the battery and the sky-blue terminal to the (+) terminal of the battery. Then, connect the (+) terminal and ② terminal to the tester and check the continuity.

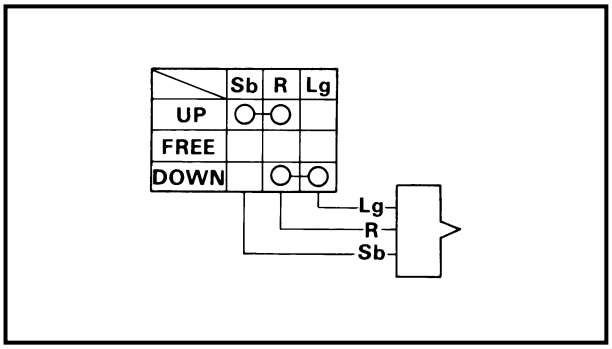

M56100-0

TRAILER SWITCH

1. To see that there is continuity, push the switch.

Unit: Ω

		Checking leads	
		Sky blue / Red	Light green / Red
Switch Position	UP	Continuity	Discontinuity
	FREE	Discontinuity	Discontinuity
	DOWN	Discontinuity	Continuity

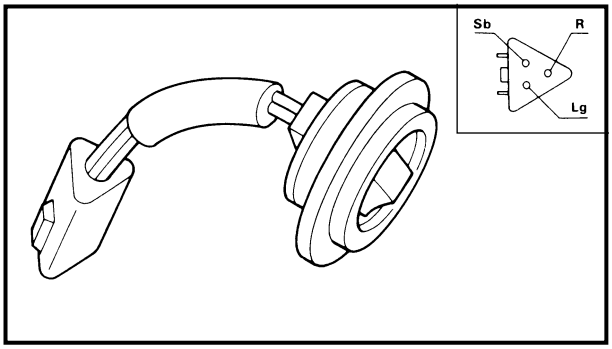

2. Check rubber seal.
Replace the seal if it has any damage.

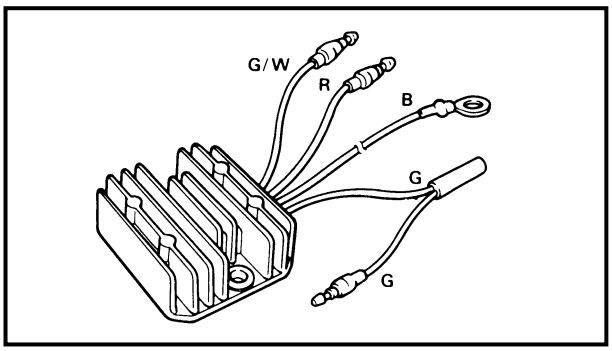

M56501-0

RECTIFIER/REGULATOR

1. Check the continuity of the rectifier/regulator.

Rectifier/regulator check

Tester ⊕ / Tester ⊖	Green	Green/White	Red	Black
Green		∞	Continuity	∞
Green/White	Continuity		Continuity	Continuity
Red	∞	∞		∞
Black	Continuity	Continuity	Continuity	

∞ : Discontinuity

If continuity is not as specified, replace the rectifier/regulator.

NOTE:

- The digital tester cannot be used for this inspection.
- Never connect the rectifier/regulator directly to the battery to check continuity.
- When testing, disconnect the battery terminals.
- When resistance is measured at less than 100 Ω, it can be said that there is continuity.

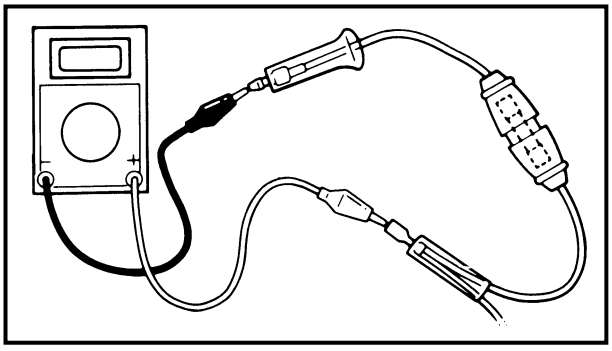

M57001-0*

FUSE

1. Referring to the diagram, check the continuity of the fuse. If the fuse is blown, replace with a fuse of correct rating.

Fuse rating:
20A

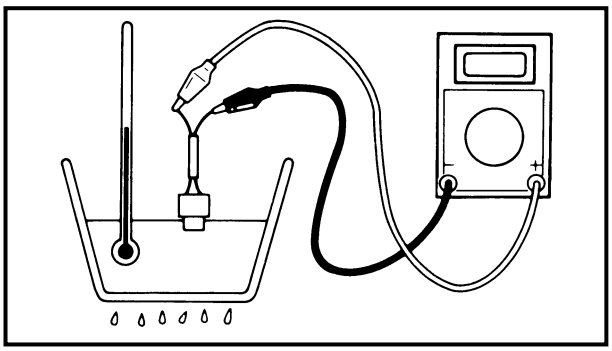

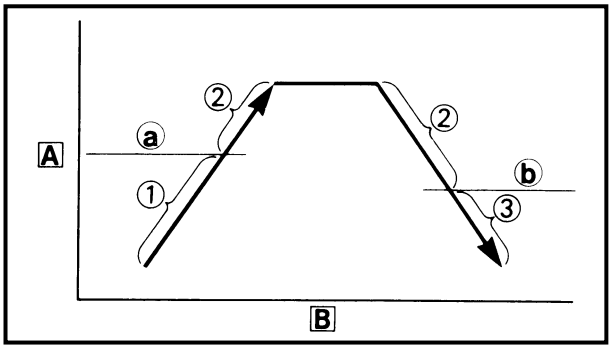

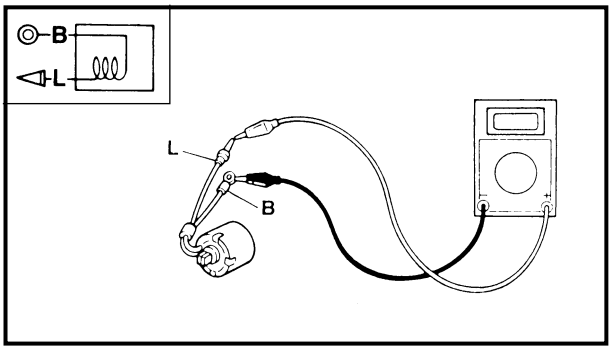

M57300-0

THERMO SWITCH

1. Immerse the thermo switch in water. While heating the water, check the continuity at the specified temperature.
2. While cooling the water, check the continuity at the specified temperature.
   If continuity is not as specified, replace the thermo switch.

ON temperature ⓐ:
84 ~ 90˚C (183 ~ 194˚F)
OFF temperature ⓑ:
60 ~ 74˚C (140 ~ 165˚F)

① Discontinuity
② Continuity
③ Discontinuity
A Temperature
B Time

FUEL ENRICHMENT VALVE

1. Measure the resistance of the fuel enrichment valve.

Fuel enrichment valve resistance:
at 20˚C (68˚F)
L – B: 3.4 ~ 4.0 Ω

NOTE:
Refer to "Low resistance measurement" for this inspection.

M57500-0

OIL INJECTION SYSTEM (Oil injection model)

① Oil level sensor
② Digital Meter
(Oil level warning lamps/control unit)
③ Lead wire
④ Lead wire
⑤ Lead wire assembly

50, 60, 70 hp

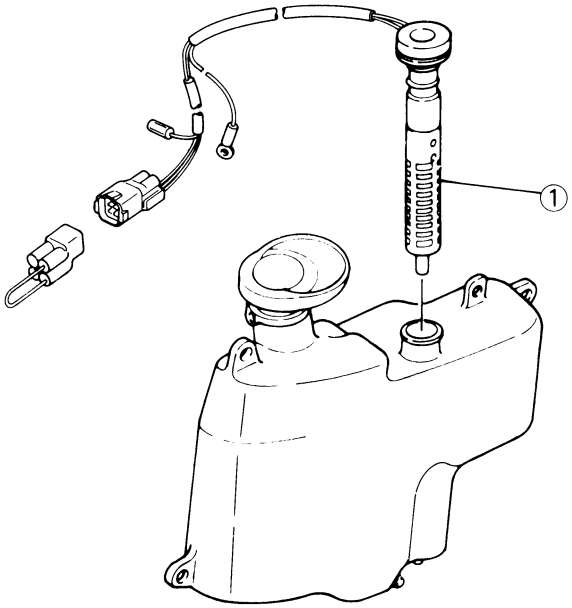

75, 80, 90 hp

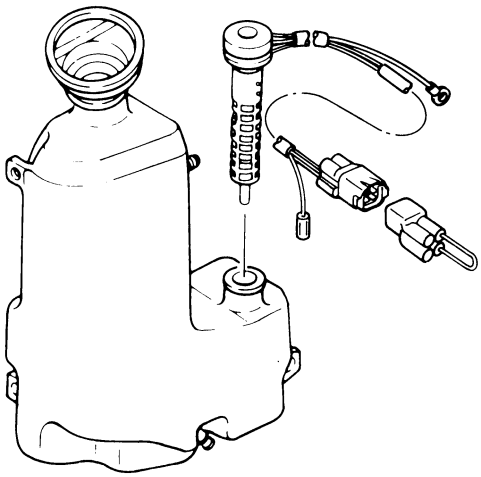

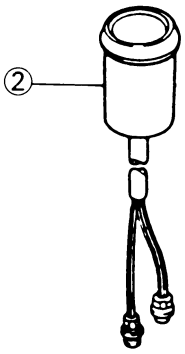

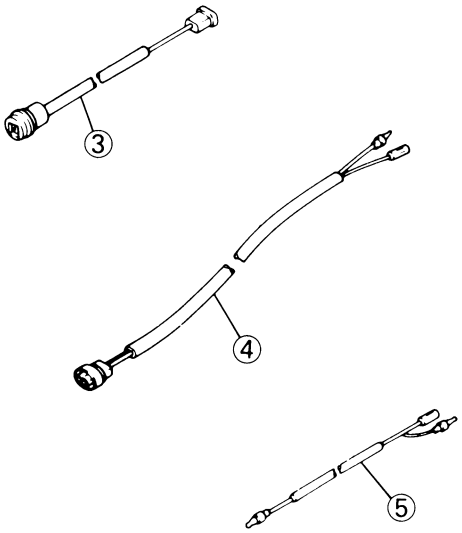

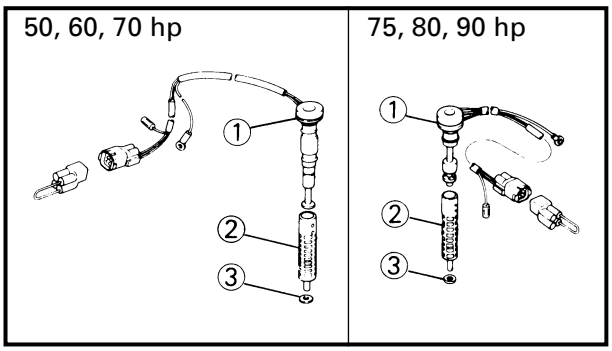

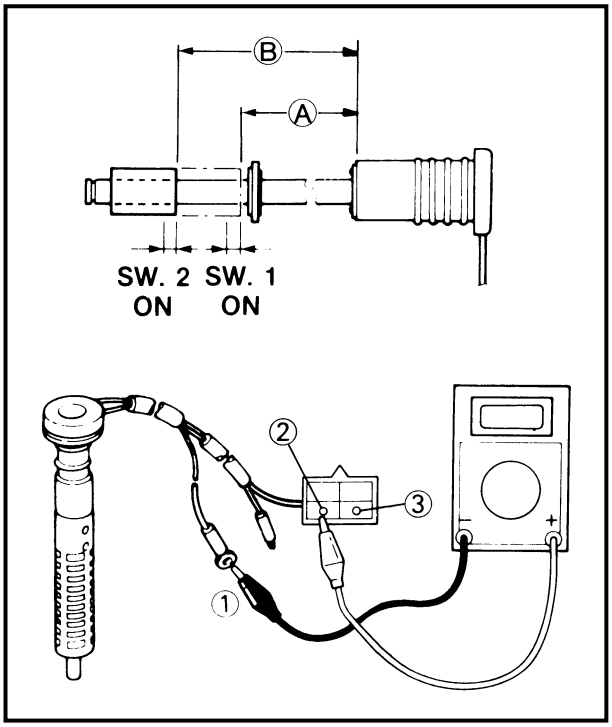

M58004-0

OIL-LEVEL SENSOR

1. Remove the circlip and disassemble the oil-level sensor.

① Oil-level sensor
② Strainer cover
③ Gasket

2. Referring to the illustrations and tables, check the continuity and resistance.

50, 60, 70 hp
Marking: 6H3-16 **Unit: Ω**

Oil level sensor resistance

	Float SW.1 ON Ⓐ 79.5 ~ 82. 5 mm (3.13 ~ 3.25 in)		Float SW. 2 ON Ⓑ 114.5 ~ 117.3 mm (4.51 ~ 4.62 in)		
Tester ⊕ / Tester ⊖	① Black	② Green	Tester ⊕ / Tester ⊖	① Black	③ Green/ Red
① Black		0	① Black		*∞
② Green	0		③ Green/ Red	640	

Oil level sensor resistance

Float SW. 1, SW. 2, both OFF

Tester ⊕ / Tester ⊖	② Green	② Green	③ Green/ Red
① Black		∞	*∞
② Green	∞		∞
③ Green/Red	*∞	∞	

* "∞" indicates that the pointer deflects once and returns to "∞".
∞ : Discontinuity

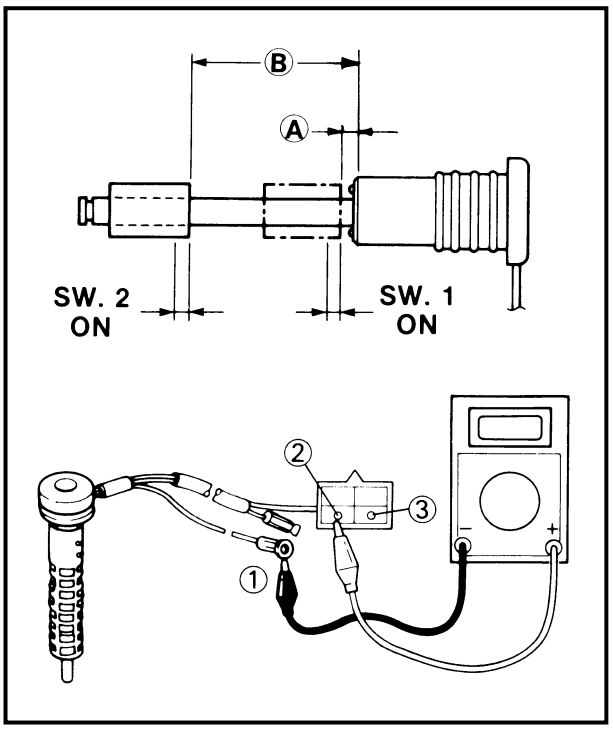

75, 80, 90 hp
Marking: 6H1-15 **Unit: Ω**

Oil level sensor resistance

Tester ⊕ / Tester ⊖	Float SW.1 ON Ⓐ 5.8 ~ 8.8 mm (0.23 ~ 0.35 in)		Float SW. 2 ON Ⓑ 42.3 ~ 45.3 mm (1.67 ~ 1.78 in)		
	① Black	② Green		① Black	③ Green/ Red
① Black		0	① Black		*∞
② Green	0		③ Green/ Red	640	

Oil level sensor resistance

Float SW. 1, SW. 2, both OFF

Tester ⊕ / Tester ⊖	② Green	② Green	③ Green/ Red
① Black		∞	*∞
② Green	∞		∞
③ Green/Red	*∞	∞	

* "∞" indicates that the pointer deflects once and returns to "∞".
∞ : Discontinuity

3. Assemble as shown in the diagram.

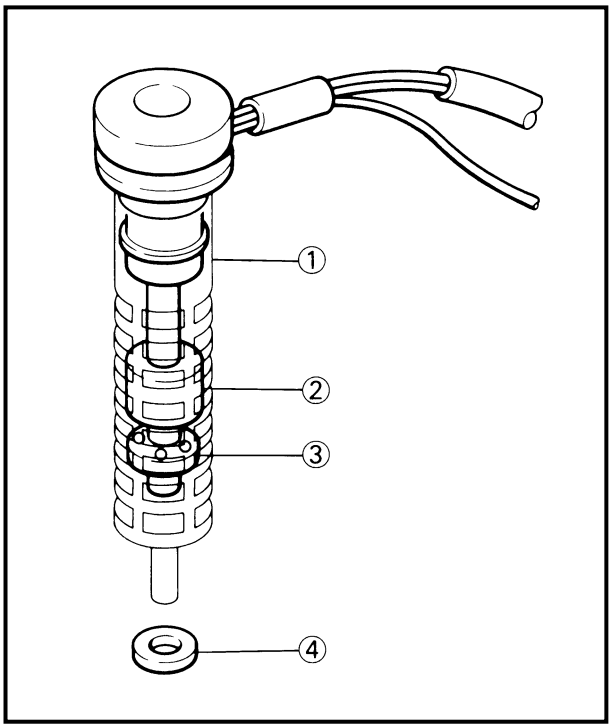

① Strainer cover
② Float (Magnet)
③ Plate
④ Gasket

NOTE:
- Place the float with the magnet side upward.
- Assemble the plate which has a hole at the bottom.

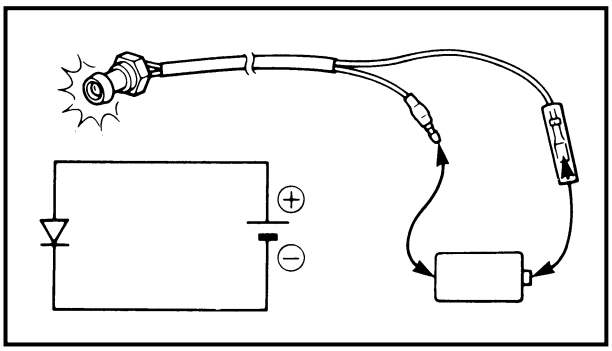

M57602-0

OIL-LEVEL WARNING LAMP (L.E.D.)

(50GETO)

Test the Light Emitting Diode (L.E.D.) using a 1.5-V dry-cell battery.

If no light is emitted, replace the warning lamp.

Battery voltage:
1.5V

CAUTION:

Do not use a 12-V battery or a larger capacity type, as this may damage the L.E.D. We recommend using a pen light battery.

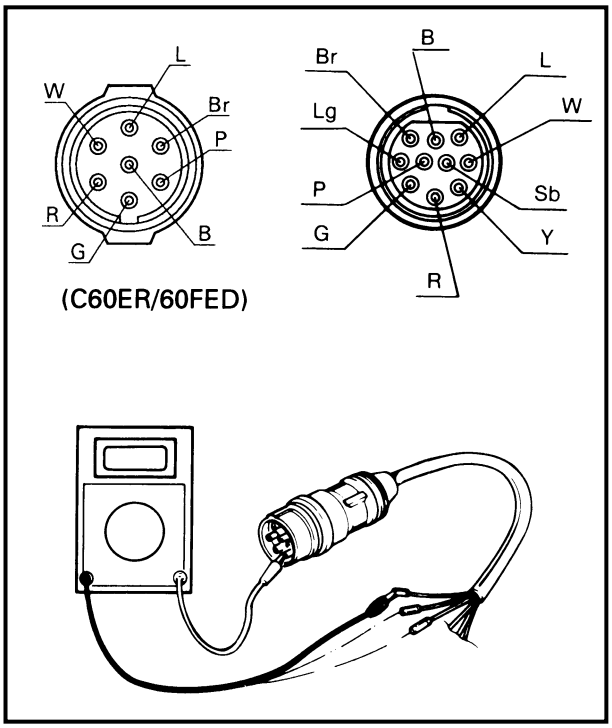

M58300-0

WIRING HARNESS

1. Check the continuity between the coupler side and each connector. Cores and pins of identical colors must be connected or a continuity test can not be made.

2. If any of the cores is open-circuit, replace the wiring harness.

Lg : Light green
P : Pink
Br : Brown
B : Black
L : Blue
Sb : Sky blue
W : White
Y : Yellow
R : Red
G : Green

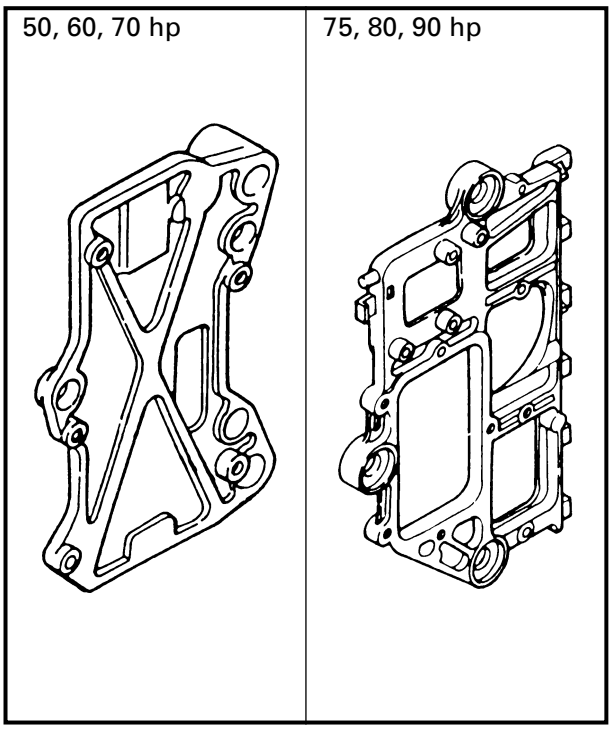

M58800-0

BRACKET

1. Inspect the bracket and replace it if it's cracked.

M58900-0*

BATTERY

Refer to "PERIODIC SERVICE" section in chapter 3.

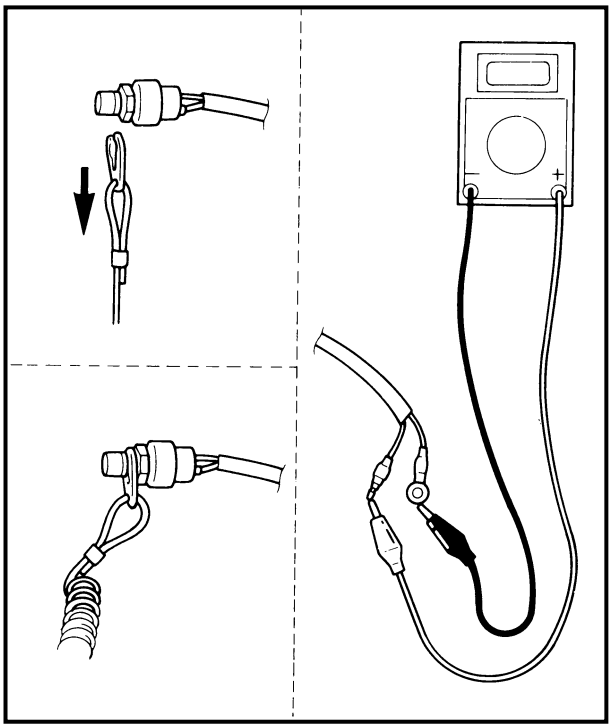

M59000-0

ENGINE STOP SWITCH (P60TH/60FEHTO, P75TH/75CEHTO, 90AEHD)

1. When removing and installing the lock-plate, check for continuity according to the chart below.

Lock plate	Wire color	
	W	B
Removed	○	○
Installed		

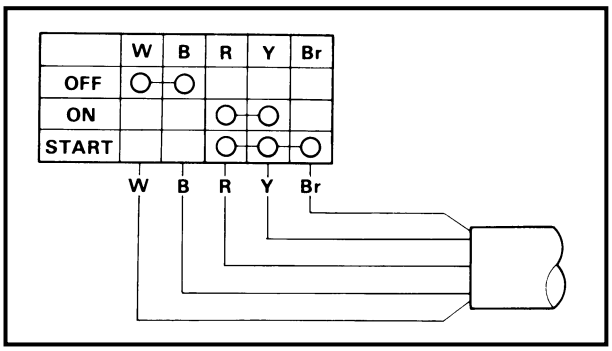

MAIN SWITCH (P60TH/60FEHTO, P75TH/75CEHTO, 90AEHD)

1. Check the continuity of the main switch. Replace if continuity is not as specified.

		Checking leads		
		White | Black	Red | Yellow	Red | Yellow | Brown
Switch Position	OFF	Continuity	Discontinuity	Discontinuity
	ON	Discontinuity	Continuity	Discontinuity
	START	Discontinuity	Discontinuity	Continuity

NEUTRAL SWITCH (P60TH/60FEHTO, P75TH/75CEHTO, 90AEHD, 90TR/90AETO, B90TR/90AETO)

1. Check the continuity of the neutral switch.
   Replace if continuity is not as specified.

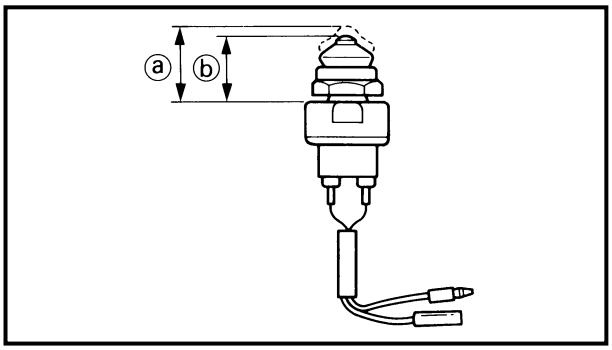

	Distance	Color: Brown – Brown
Free ⓐ	19.6 ~ 20.5 mm (0.77 ~ 0.81 in)	Discontinuity
Push ⓑ	18.5 ~ 19.5 mm (0.73 ~ 0.77 in)	Continuity

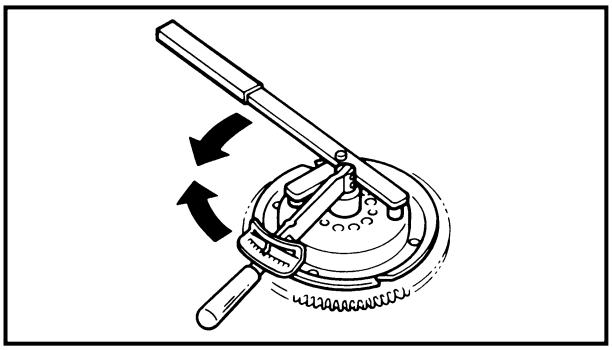

M61002-0*

INSTALLATION

FLYWHEEL MAGNETO

1. Install the magneto base onto the retainer-plate.
2. Install so that the woodruff key in the keyways fits in the crankshaft.
3. Lock the flywheel rotor with the washer and nut. Tighten the nut to the specified torque.

	Flywheel nut: 160 Nm (16 m • kg, 115 ft • lb)
	Flywheel holder: YB-6139/90890-06522

4. Install the flywheel cover.

M71001-0*

STARTER MOTOR

REMOVAL

1. Disconnect the cables and remove the starter-motor.

DISASSEMBLY

1. Remove the starter-clutch. Using a screw-driver, pry off the clip.

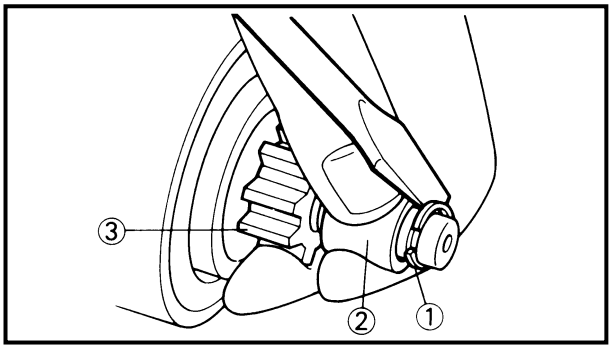

① Clip
② Pinion Stopper
③ Pinion (starter clutch)

NOTE:

Push the pinion stopper by hand toward the pinion and remove the clip.

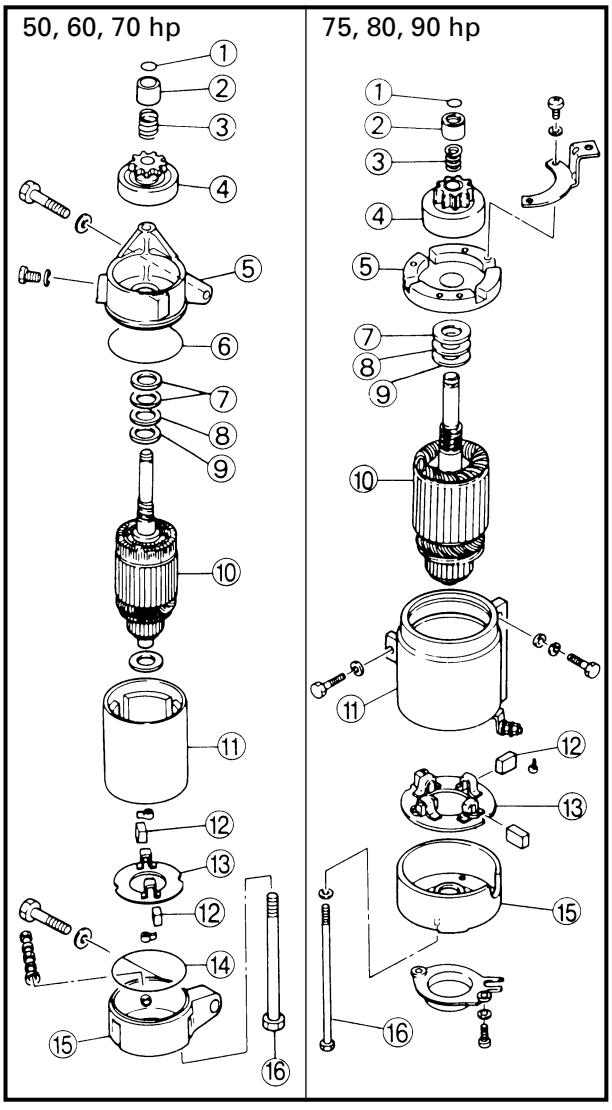

2. Remove the two through-bolts and pull out the front cover lightly tapping it with a plastic hammer, if necessary.
3. Using a piece of steel wire, separate the brush springs and remove the brushes from the brush-holders.
4. Remove the yoke assembly by lightly tapping it with a plastic hammer and remove the armature.

① Clip
② Pinion stopper
③ Spring
④ Pinion (starter clutch)
⑤ Front cover
⑥ O-ring
⑦ Washer
(50, 60, 70 hp: t = 1.0 mm,
75, 80, 90 hp: t = 2.0 mm)
⑧ Washer
(50, 60, 70 hp: t = 0.15 mm,
75, 80, 90 hp: t = 0.3 mm)
⑨ Washer
(50, 60, 70 hp: t = 2.0 mm,
75, 80, 90 hp: t = 1.0 mm)
⑩ Armature
⑪ Yoke assembly
⑫ Brush
⑬ Brush holder
⑭ O-ring (50, 60, 70 hp)
⑮ Rear cover
⑯ Through-bolt

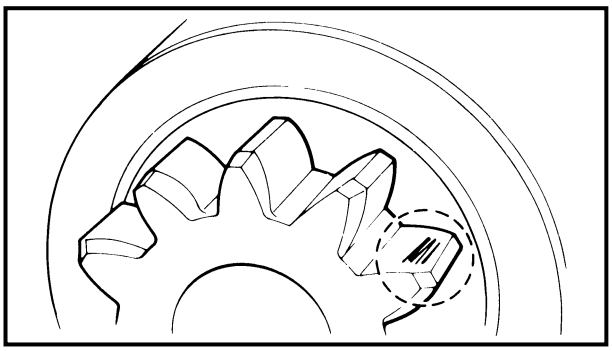

INSPECTION

PINION

1. Inspect the pinion and inner teeth for wear or damage and check ease of pinion sliding motion and replace, if damaged.
2. Inspect the flywheel gear and replace, if worn or damaged.

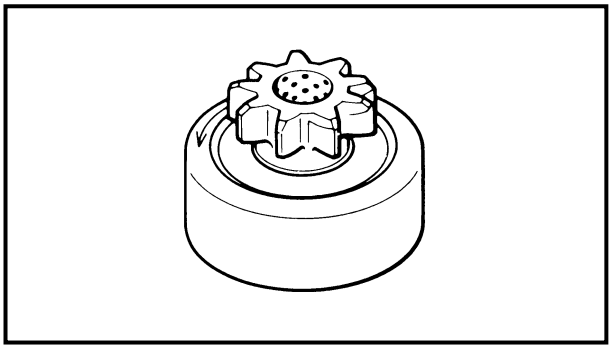

STARTER CLUTCH

1. Check the clutch movement. Rotate the pinion clockwise and check that it turns freely. Also, try to rotate the pinion counterclockwise and confirm that it locks.

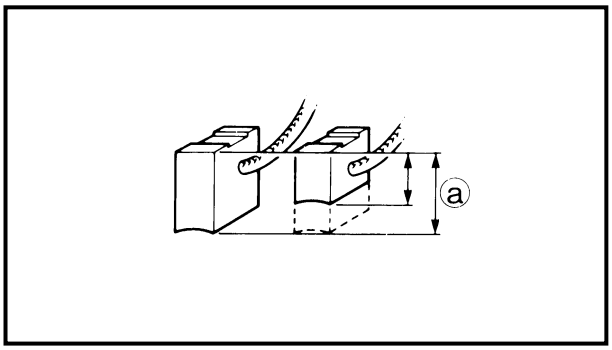

BRUSH

1. Measure the brushes for wear.

Brush size ⓐ:
Standard:
50, 60, 70 hp: 12.5 mm (0.49 in)
75, 80, 90 hp: 16.0 mm (0.63 in)
Minimum:
50, 60, 70 hp: 9.0 mm (0.35 in)
75, 80, 90 hp: 12.0 mm (0.47 in)

If the size is less than the minimum specification, replace the complete brush-holder assemblies.

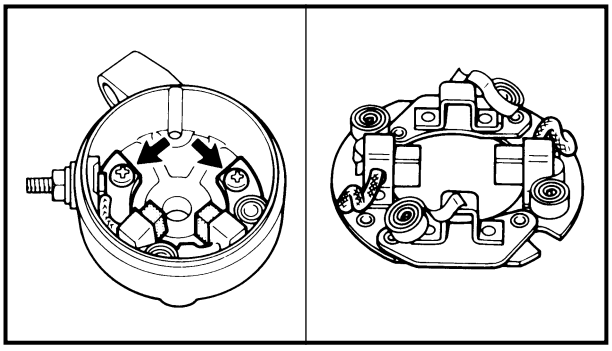

BRUSH-HOLDER

1. Check the insulation between the brush-holder and ground. If there is any continuity, replace the brush-holder assembly.

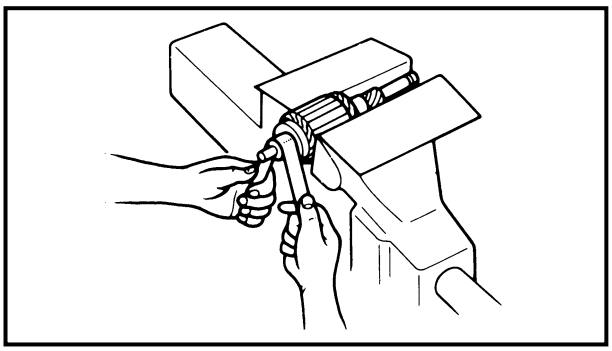

ARMATURE

1. Inspect the commutator surfaces and if these are dirty or burnt, clean with 400-grit wet-or-dry sandpaper.

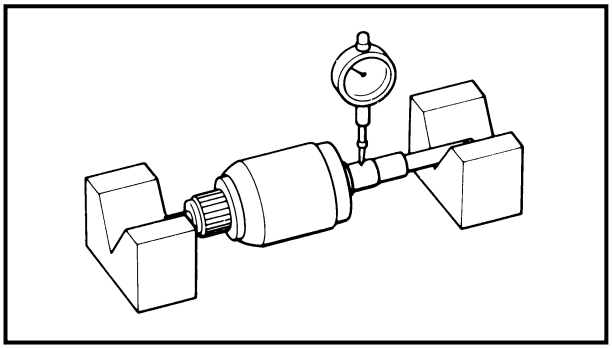

2. Inspect the commutator deflection with a dial gauge and block and replace the armature if the deflection is out of specification.

Maximum deflection:
0.05 mm (0.0020 in)

If the deflection is greater than the specified deflection, replace the armature.

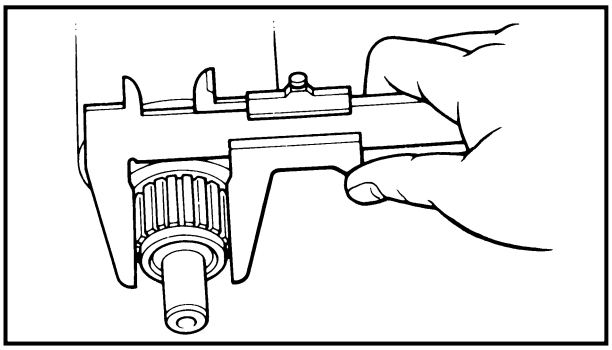

3. Measure the diameter of the commutator.

Standard diameter:
50, 60, 70 hp: 30 mm (1.18 in)
75, 80, 90 hp: 33 mm (1.30 in)
Minimum diameter:
50, 60, 70 hp: 29 mm (1.14 in)
75, 80, 90 hp: 31 mm (1.12 in)

If the commutator diameter is out of specification, replace the armature.

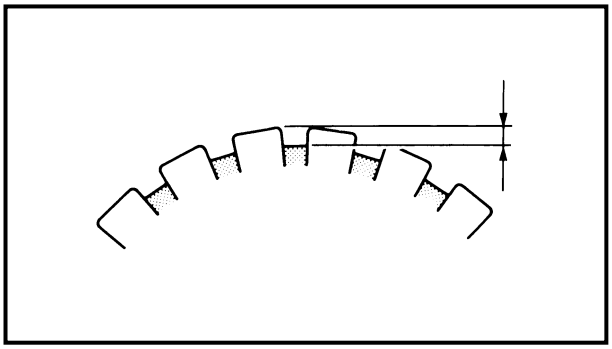

4. Measure the commutator mica undercut depth.

Standard mica undercut depth:
0.8 mm (0.03 in)
Minimum undercut depth:
0.2 mm (0.01 in)

If the undercut depth is less than the specified minimum, scrape between the segments with a hacksaw blade, then remove all particles of mica and metal with compressed air.

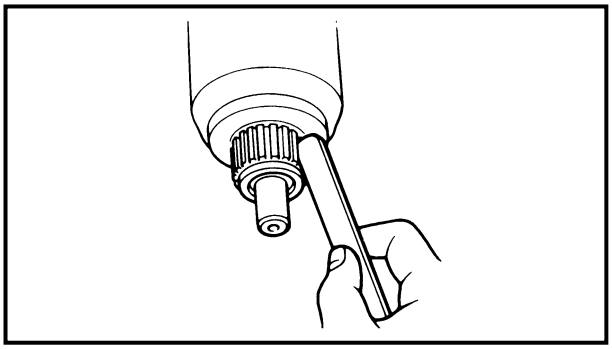

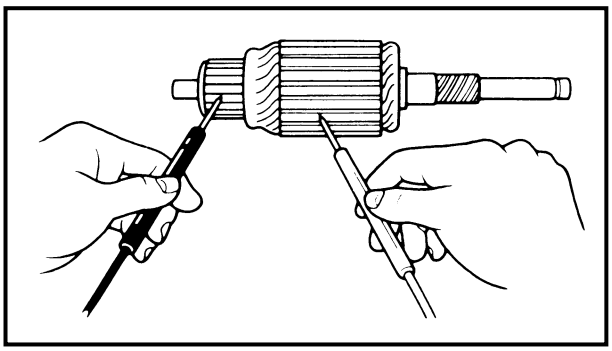

5. Check the insulation between the shaft or laminations and ground. If there is any continuity, replace the armature.

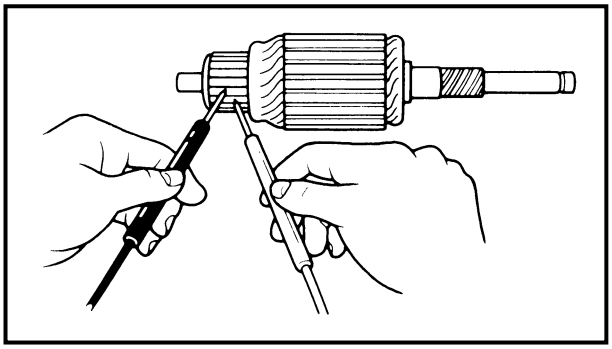

6. Inspect that the commutator is an open circuit by checking for continuity between segments. If any segment is not continuous, replace the armature.

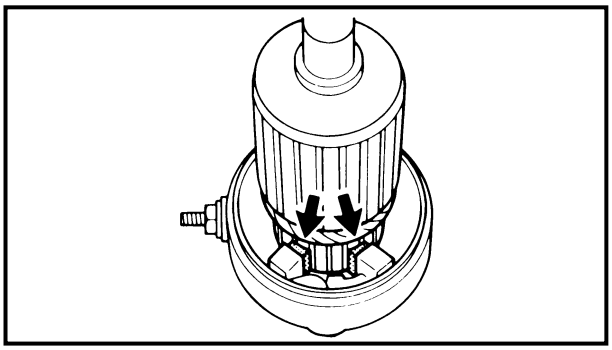

ASSEMBLY (50, 60, 70 hp)

1. Apply a thin coat of water resistant grease to the rear cover bushing and install the armature in the rear cover assembly.

NOTE:
Install by lifting the brushes, and inserting the armature straight into the bushing taking care not to scratch the brush or contaminate it with grease.

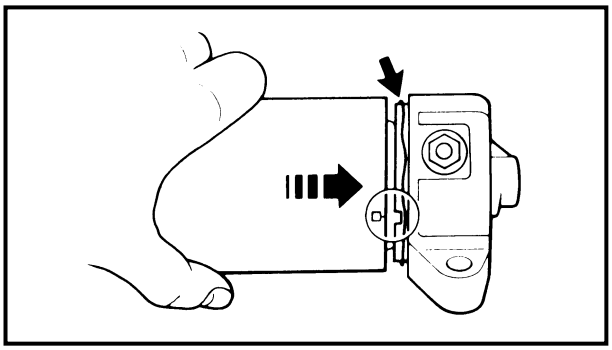

2. Install the yoke assembly, aligning the recess on the rear cover with the projection on the stator and ensuring that the O-ring fits correctly in the rear cover groove.

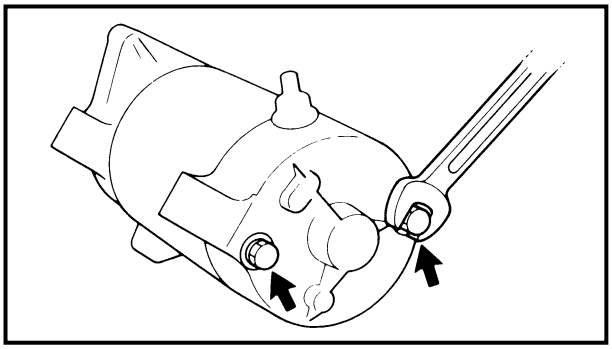

3. Mount the two washers on the armature shaft. Sparingly apply water resistant grease to the front cover bushing, ensure that the O-ring fits into the armature shaft and insert the shaft into the front cover.

4. Insert the through-bolts into the rear cover and screw them into the front cover.
5. Mount the pinion, spring and pinion-stopper on the armature shaft.

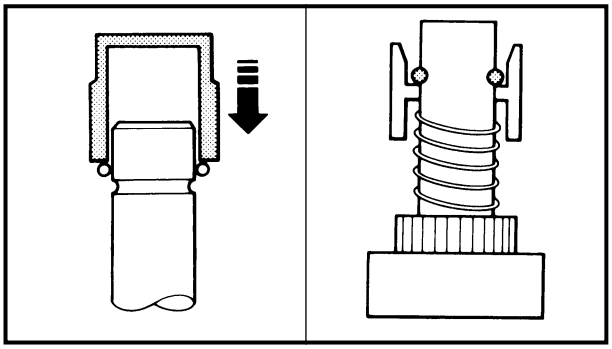

6. Hold down the pinion-stopper and fit the circlip into the groove in the shaft. Use a socket-wrench that fits properly over the armature shaft. Reform the circlip by using pliers. Lift up the pinion-stopper until its bottom contacts the circlip.

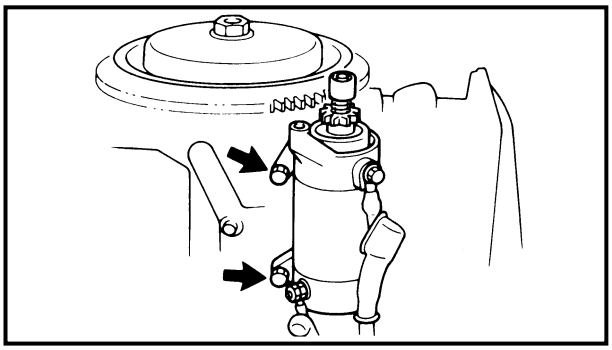

INSTALLATION (50, 60, 70 hp)

1. Place the starter-motor on the starter motor stay and tighten the bolts to the specified torque.

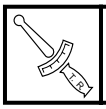	**Starter motor mounting bolt: 20 Nm (2.0 m • kg, 14 ft • lb)**

2. Secure the starter-motor to the engine with the four starter-motor mounting bolts.
3. Connect the positive and negative wires to the starter-motor.

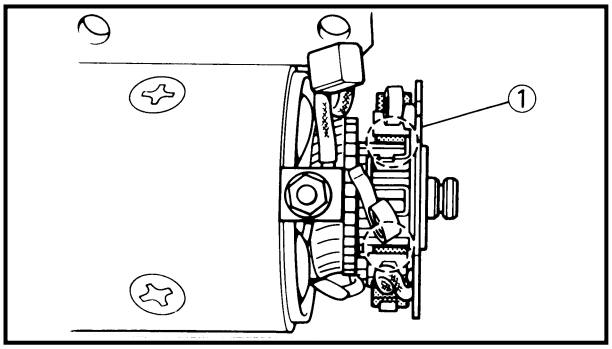

ASSEMBLY (75, 80, 90 hp)

1. Insert the armature into the yoke assembly. Fit the brush attached to the negative side of the brush holder into the armature.

① Brush holder

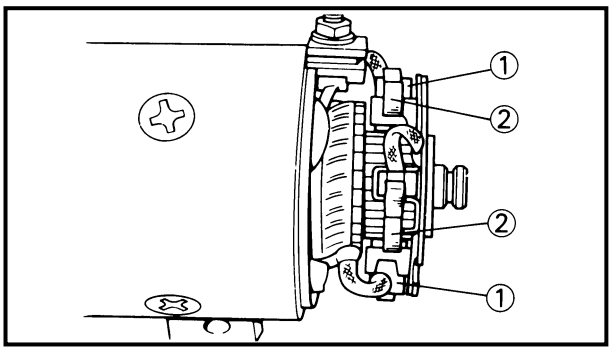

2. Install the positive brush (on the stator coil side) in the brush holder and hold it with the spring.

NOTE:
Use care not to scratch the brushes when installing.

① Positive brush
② Spring

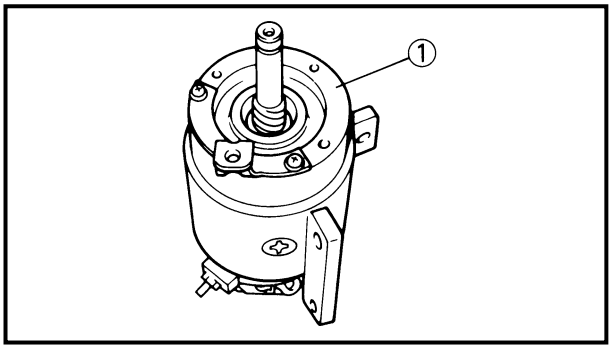

3. Mount the two steel washers and resin washer, in that order, on the armature shaft and install the front cover onto the yoke assembly.

① Front cover

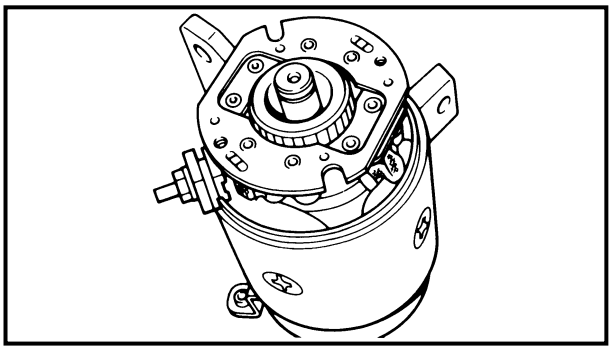

4. Align the cut (for the through-bolt) in the brush holder with the gap in the brush holder so that the through-bolt can be inserted.

5. Install the rear cover onto the yoke assembly, insert the through-bolt into the rear cover and screw it into the front cover.

NOTE:
- Apply a thin coat of grease (anti-freeze grease) to the front and rear cover bearings.
- To seal out water, the mating surfaces are coated with sealing compound.

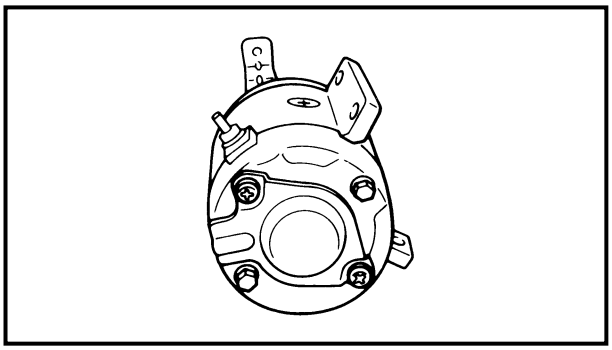

INSTALLATION (75, 80, 90 hp)

1. Place the starter-motor on the starter-motor stay and tighten the bolts.

2. Secure the starter-motor to the engine with the four starter-motor mounting-bolts.

3. Connect the positive and negative wires to the starter-motor.

CHAPTER 9
TROUBLE ANALYSIS

TROUBLE ANALYSIS 9-1
TROUBLE ANALYSIS CHART 9-1

TROUBLE ANALYSIS

NOTE:

The following items should be obtained before “trouble analysis”.
1. Battery is charged and its specified gravity is in specification.
2. There is no incorrect wiring connection.
3. Wiring connections are surely engaged and without any rust.
4. Lanyard is installed to the engine stop switch.
5. Shift position is in neutral.
6. Fuel is coming to the carburetor.
7. Correct rigging and engine setting are obtained.
8. Engine is free from any “Hull problem”.

TROUBLE ANALYSIS CHART

Trouble mode												Check elements	
ENGINE WILL NOT START	ROUGH IDLING	ENGINE STALLS	ENGINE WILL NOT STOP	POOR PERFORMANCE	OVERHEATING	LOOSE STEERING	LOOSE TILT HOLDING	TILT MOTOR WILL NOT RUN	HARD SHIFTING	IRREGULAR WARNING INDICATION	POOR BATTERY CHARGING	Relative part	Reference Chapter
												FUEL SYSTEM	
		○		○								Idle speed	3
○		○		○								Fuel hose	3
○		○		○								Fuel joint	4
○	○	○		○								Fuel filter	4
○		○		○								Fuel pump	4
○		○		○								Carburetor	4
		○		○	○							Pilot screw setting	4
												POWER UNIT	
	○			○	○							Link adjustment	3
○	○			○								Compression	5
○	○			○								Read valve	5
○	○											Cylinder head gasket	5
○				○								Cylinder block	5
○												Piston	5
○				○								Piston ring	5
○				○								Crank case	5
				○								Bearing	5
					○							Thermostat	5
					○							Water passage	5

TROUBLE ANALYSIS

Trouble mode												Check elements	
ENGINE WILL NOT START	ROUGH IDLING	ENGINE STALLS	ENGINE WILL NOT STOP	POOR PERFORMANCE	OVERHEATING	LOOSE STEERING	LOOSE TILT HOLDING	TILT MOTOR WILL NOT RUN	HARD SHIFTING	IRREGULAR WARNING INDICATION	POOR BATTERY CHARGING	Relative part	Reference Chapter
												LOWER UNIT	
○									○			Neutral position	6
○									○			Clutch	6
○									○			Gear	6
				○	○							Water inlet	6
				○	○							Water pump	6
				○								Propeller shaft	6
									○			Shift rod	6
									○			Shift slider	6
									○			Shift cam	6
									○			Lower case	6
				○								Shim adjustment	6
												BRACKET UNIT	
						○						Bracket	7
						○						Mount rubber	7
									○			Shift actuator	7
												PTT UNIT	
							○					Fluid level	7
							○					Relief valve	7
							○					Fluid passage	3
								○				PTT motor	7
								○				PTT control system	7
												ELECTRICAL	
○				○								Pulser coil	8
○				○								Charge coil	8
											○	Lighting coil	8
○	○	○		○								Ignition coil	8
○	○			○								Spark plug cap	8
	○	○	○	○	○					○		CDI unit	8
				○								Crank position sensor	8
○												Starter relay	8
							○					Power trim and tilt relay	8
							○					Trailer switch	8
											○	Rectifier/regulator	8

TROUBLE ANALYSIS

Trouble mode												Check elements	
ENGINE WILL NOT START	ROUGH IDLING	ENGINE STALLS	ENGINE WILL NOT STOP	POOR PERFORMANCE	OVERHEATING	LOOSE STEERING	LOOSE TILT HOLDING	TILT MOTOR WILL NOT RUN	HARD SHIFTING	IRREGULAR WARNING INDICATION	POOR BATTERY CHARGING	Relative part	Reference Chapter
○							○				○	Fuse	8
				○	○					○		Thermo switch	8
				○						○		Oil level sensor	8
										○		Oil level warning lamp	8
○								○		○	○	Wire harness	8
○								○			○	Battery	3
			○									Engine stop switch	8
○			○									Main switch	8
○												Neutral switch	8
○												Starter motor	8

YAMAHA

YAMAHA MOTOR CO., LTD.

Printed in USA

Feb. 1999 – × 1 CR

(50GETO, 60FEHTO, 60FED, 60FEDO, 60FET, 60FETO, 70BEDO, 70BETO, 75CET, 75CETO, 75CEHTO, 80AETO, 90AEHD, 90AED, 90AET, 90AETO)

(英)

Printed on recycled paper