SUZUKI OUTBOARD MOTOR

DF200A

SERVICE MANUAL

99500-96L00-01E

IMPORTANT NOTICE

WARNING / CAUTION / NOTICE / NOTE

Please read this manual and follow its instructions carefully. To emphasize special information, the symbol and the words **⚠ WARNING**, **⚠ CAUTION**, ***NOTICE*** and **NOTE** have special meanings.
Pay special attention to the messages highlighted by these signal words.

⚠ WARNING

Indicates a potential hazard that could result in death or serious injury.

⚠ CAUTION

Indicates a potential hazard that could result in minor or moderate injury.

NOTICE

Indicates a potential hazard that could result in damage to the motor or boat.

NOTE

Indicates special information to make maintenance easier or instructions clearer.

Please note, however, that the warnings and cautions contained in this manual cannot possibly cover all potential hazards relating to the servicing, or lack of servicing, of the outboard motor. In addition to the **⚠ WARNING**, **⚠ CAUTION**, and ***NOTICE*** stated, you must also use good judgment and observe basic mechanical safety principles.

⚠ WARNING

This service manual is intended for authorized Suzuki outboard motor dealers and qualified service technicians only.
Apprentice mechanics or do-it-yourself mechanics that don't have the proper tools and equipment may not be able to properly perform the services described in this manual. Improper repair may result in injury to the mechanic and may render the engine unsafe for the boat operator and passengers.

FOREWORD

This manual contains an introductory description of the SUZUKI DF200A Outboard motors and procedures for inspection, service and overhaul of their main components.
General knowledge information is not included.
Please read the GENERAL INFORMATION section to familiarize yourself with basic information concerning this motor. Read and refer to the other sections in this manual for information regarding proper inspection and service procedures.
This manual will help you better understand these outboard motors, assisting you in providing your customers with optimum and quick service.

- ** This manual has been prepared using the latest information available at the time of publication. Differences may exist between the content of this manual and the actual outboard motor.*
- ** Illustrations in this manual are used to show the basic principles of operation and work procedures and may not represent the actual outboard motor in exact detail.*
- ** This manual is intended for use by technicians who already possess the basic knowledge and skills to service SUZUKI Outboard motors. Persons without such knowledge and skills should not attempt to service Suzuki Outboard engines by relying on this manual only and should contact an authorized SUZUKI Outboard motor dealer.*

NOTE:
This manual is compiled with the production model manufactured in October, 2014.

SUZUKI MOTOR CORPORATION

© COPYRIGHT SUZUKI MOTOR CORPORATION 2014

TABLE OF CONTENTS

Precautions 00-i
Precautions 00-1

General Information 0-i
General Information 0A-1
Maintenance and Tune-Up 0B-1

Power Head 1-i
Precautions 1-1
Engine Control 1A-1
Engine Electrical Devices 1C-1
Power Unit Mechanical 1D-1
Power Unit Lubrication 1E-1
Power Unit Cooling System 1F-1
Fuel System 1G-1
Ignition System 1H-1
Starting System 1I-1
Charging System 1K-1

Mid Unit 2-i
Precautions 2-1
Housing and Bracket 2A-1
Power Trim and Tilt 2B-1

Lower Unit 3-i
Precautions 3-1
Right Hand Rotation Unit 3A-1
Left Hand Rotation Unit 3B-1

Wire / Hose Routing 4-i
Precautions 4-1
Wire Routing 4A-1
Fuel / Water Hose Routing 4B-1

Section 00

Precautions

CONTENTS

Precautions 00-1

Precautions 00-1
General Precautions 00-1

Precautions

Precautions

General Precautions

CENFH5110000001

The WARNING, CAUTION and NOTICE messages below describe some general precautions that you should observe when servicing the outboard motor. These general precautions apply to many of the service procedures, but they will not necessarily be repeated for every procedure to which they apply.

⚠ WARNING

Failure to take proper precautions when servicing the outboard motor can cause severe personal injury.

- **To avoid eye injury, always wear protective glasses when filing metals, working on a grinder, or doing other work, which could cause debris.**
- **When two or more persons work together, pay attention to the safety of each other.**
- **When it is necessary to run the outboard motor indoors, make sure that exhaust gas is vented outdoors.**
- **When testing an outboard motor in the water, ensure that the necessary safety equipment is on board.**
  Such equipment includes: flotation aids for each person, fire extinguisher, distress signals, anchor, paddles, bilge pump, first aid kit, emergency starter rope, etc.
- **Whenever handling toxic or flammable materials, wear safety glasses to protect your eyes. Any toxic or flammable materials getting into your eye may cause inflammation. Also wear moistureproof gloves to protect your skin.**
- **Do not swallow any toxic or flammable materials. Swallowing them could cause diarrhea, nausea or other health problems. Be especially careful not to allow children and pets to swallow these materials.**
- **Keep all toxic or flammable materials out of reach of children and pets.**
- **When working with toxic or flammable materials, make sure that the area you work in is well ventilated and that you follow all of the material manufacturer's instructions.**
- **Never use gasoline as a cleaning solvent.**
- **To avoid getting burned, do not touch the engine, engine oil or exhaust system during or shortly after engine operation.**
- **Avoid contact with new and used oil. Prolonged contact with used oil has been shown to cause skin cancer in laboratory animals. Brief contact with used oil may irritate the skin. Keep new and used oil away from children and pets. To minimize your exposure to oil, wear a long sleeve shirt and moisture - proof gloves (such as latex gloves) when changing oil. If oil contacts your skin, wash thoroughly with soap and water. Launder any clothing or rags if wet with oil. Recycle or properly dispose of used oil.**
- **Never disconnect any of the fuel lines between the fuel pump and injectors without first releasing the fuel pressure, or fuel can be sprayed out under pressure.**
- **After servicing the fuel, lubrication, cooling and/or the exhaust system, check all lines and fittings related to the system for leaks.**
- **Carefully adhere to the battery handling instructions laid out by the battery supplier.**

NOTICE

Failure to take proper precautions when servicing the outboard motor can cause damage to the parts or the outboard motor.
To prevent the parts or the outboard motor from damage, be sure to take the following precautions:

- **When removing parts that are to be reused, keep them arranged in an orderly manner so that they may be reinstalled in the proper order and orientation.**
- **Be sure to use special tools where instructed.**
- **Make sure that all parts used in assembly are clean and also lubricated when specified.**
- **When use of a certain type of lubricant, bond, or sealant is specified, be sure to use the specified type.**
- **When removing the battery, disconnect the negative cable first and then the positive cable. When reconnecting the battery, connect the positive cable first and then the negative cable.**
- **When performing service to electrical parts, if the service procedures do not require using battery power, disconnect the negative cable at the battery.**
- **Do not expose connectors and electrical parts to water, which will cause electrical systems problems.**
- **Always be careful not to drop electrical components (ECM, relays, etc.) or handle them in a rough manner.**
- **Whenever you remove oil seals, gaskets, packing, O-rings, locking washers, locking nuts, cotter pins, circlips, and certain other parts as specified, always replace them with new ones. Also, before installing these new parts, be sure to remove any left over material from the mating surfaces.**
- **Never reuse a circlip. When installing a new circlip, take care not to expand the end gap larger than required to slip the circlip over the shaft. After installing a circlip, always ensure that it is completely seated in its groove and securely fitted.**
- **Use a torque wrench to tighten fasteners to the torque values when specified.**
- **Remove grease or oil from screw / bolt threads unless a lubricant is specified.**
- **After assembly, check parts for tightness and proper operation.**

NOTE

- **To protect the environment, do not unlawfully dispose of used motor oil, other fluids or batteries.**
- **To protect the Earth's natural resources, properly dispose of used motor parts.**

Replacement Parts

NOTICE

Use of replacement parts which are not equivalent in quality to genuine SUZUKI parts can lead to performance problems and damage.
Use only genuine SUZUKI replacement parts or their equivalent. Genuine SUZUKI parts are high quality parts which are designed and built specially for SUZUKI outboard motors.

If parts replacement is necessary, Suzuki strongly recommends that you use genuine Suzuki parts or their equivalent. They are precision-made to ensure high quality and correct fit.

Section 0

General Information

CONTENTS

General Information 0A-1

General Description 0A-1
- Symbols 0A-1
- Abbreviations 0A-1
- Wire Color Symbols 0A-2
- Warning, Caution and Information Label Locations 0A-2
- Outboard Motor Identification Number Location 0A-3
- Fuel and Oil Recommendations 0A-3
- Break-In Procedures 0A-4
- Propeller Selection Guide 0A-5
- Battery Requirement 0A-5
- Powerhead Direction of Rotation Description 0A-5

Specifications 0A-6
- Specifications 0A-6
- Service Data 0A-9
- Tightening Torque Specifications 0A-14

Special Tools and Equipment 0A-15
- Recommended Service Material 0A-15
- Special Tool 0A-16

Maintenance and Tune-Up 0B-1

Precautions 0B-1
- Precautions for Maintenance 0B-1

General Description 0B-1
- Recommended Oil and Lubricants 0B-1

Scheduled Maintenance 0B-1
- Periodic Maintenance Schedule Chart 0B-1
- Lubrication Point 0B-2

Service Instructions 0B-3
- Engine Oil Level Check 0B-3
- Engine Oil Change and Engine Oil Filter Replacement 0B-3
- Gear Oil Change 0B-6
- Spark Plug Removal and Installation 0B-7
- Spark Plug Inspection and Cleaning 0B-8
- Tappet Clearance Inspection and Adjustment 0B-9
- Idle Speed and Idle Air Control (IAC) Duty Inspection 0B-14
- Ignition Timing Inspection 0B-16
- Breather Line and Fuel Line Inspection 0B-17
- Low Pressure Fuel Filter Inspection 0B-18
- High Pressure Fuel Filter Replacement 0B-19
- Water Pump and Water Pump Impeller Inspection 0B-19
- Propeller / Propeller Nut and Cotter Pin Inspection 0B-20
- Anode Inspection 0B-20
- Bonding Wire Inspection 0B-21
- Battery Inspection 0B-22
- Balancer Chain Replacement 0B-23
- Thermostat Inspection 0B-23
- Bolts and Nuts Inspection 0B-23
- Oil Pressure Check 0B-24
- Cylinder Compression Pressure Check 0B-25

General Information

General Description

Symbols

CENFH5110101001

Listed in the table below are the symbols indicating instructions and other important information necessary for proper servicing.
Please note the definition for each symbol. You will find these symbols used throughout this manual.
Refer back to this table if you are not sure of any symbol(s) meanings.

Symbol	Definition
	Torque control required. Data beside it indicates specified torque.
	Apply oil. Use engine oil unless otherwise specified.
	Apply molybdenum oil solution. (Mixture of engine oil and SUZUKI MOLY PASTE in a ratio of 1 : 1)
GearOIL	Apply SUZUKI Outboard Motor Gear Oil.
A	Apply SUZUKI Super Grease A.
M	Apply SUZUKI Moly Paste. 99000-25140
W	Apply SUZUKI Water Resistant Grease.
1207B	Apply SUZUKI Bond 1207B.
Si	Apply SUZUKI Silicone Seal.
1342	Apply SUZUKI Thread Lock 1342.
1333	Apply SUZUKI Thread Lock Super 1333B.
TOOL	Use special tool.
	Do not reuse.
	Note on reassembly.
CD-77	Use peak voltmeter Stevens CD-77.

Abbreviations

CENFH5110101002

Abbreviations used in this service manual are as follows:

A:
ATDC: After Top Dead Center
AC: Alternating Current
B:
BCM: Boat Control Module
BTDC: Before Top Dead Center
C:
CKP Sensor: Crankshaft Position sensor
CMP Sensor: Camshaft Position sensor
D:
DBW: Drive By Wire
DC: Direct Current
DOHC: Double Over Head Camshaft
E:
ECM: Engine Control Module
ETV: Electronic Throttle Valve
ESA: Electronic Shift Actuator
EX (Ex.): Exhaust
F:
FP: Fuel Pump
G:
GND: Ground
I:
IAT: Intake Air Temperature
IG: Ignition
Ign.: Ignition
IN (In.): Intake
L:
LPS: Lever Position Sensor
M:
MAP: Manifold Absolute Pressure
O:
OCV: Oil Control Valve
P:
PCV: Positive Crankcase Ventilation
PORT: Port
PTT: Power Trim and Tilt
S:
SPC System: Suzuki Precision Control System
SPS: Shift Position Sensor
STBD: Starboard
SIGP: Start-In-Gear Protection
T:
TPS: Throttle Position Sensor
V:
VSV: Vacuum Switching Valve
VVT: Variable Valve Timing

Wire Color Symbols

CENFH5110101003

There are two kinds of colored wire used in this product.
One is single colored wire and the other is dual colored (striped) wire.
The single colored wire uses only one color symbol. example: B (Black).
The dual colored wire uses two color symbols. example: Bl/B.
The first symbol represents the base color of the wire and the second symbol represents the color of the stripe.
Example: Bl/B (Blue with Black stripe).

Symbol	Wire color	Symbol	Wire color
B	Black	Lg	Light green
Bl	Blue	O	Orange
Br	Brown	P	Pink
Dg	Dark green	R	Red
G	Green	V	Violet
Gr	Gray	W	White
Lbl	Light blue	Y	Yellow

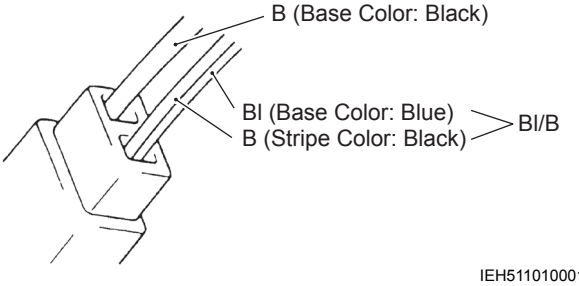

IEH511010001-01

Warning, Caution and Information Label Locations

CENFH5110101004

The figure shows main labels among others that are attached to outboard motor.
When servicing outboard motor, refer to WARNING/CAUTION instructions printed on labels.
If any WARNING/CAUTION label is found stained or damage, clean or replace it as necessary.
Do not reuse a label after it has been removed. Always use new label.

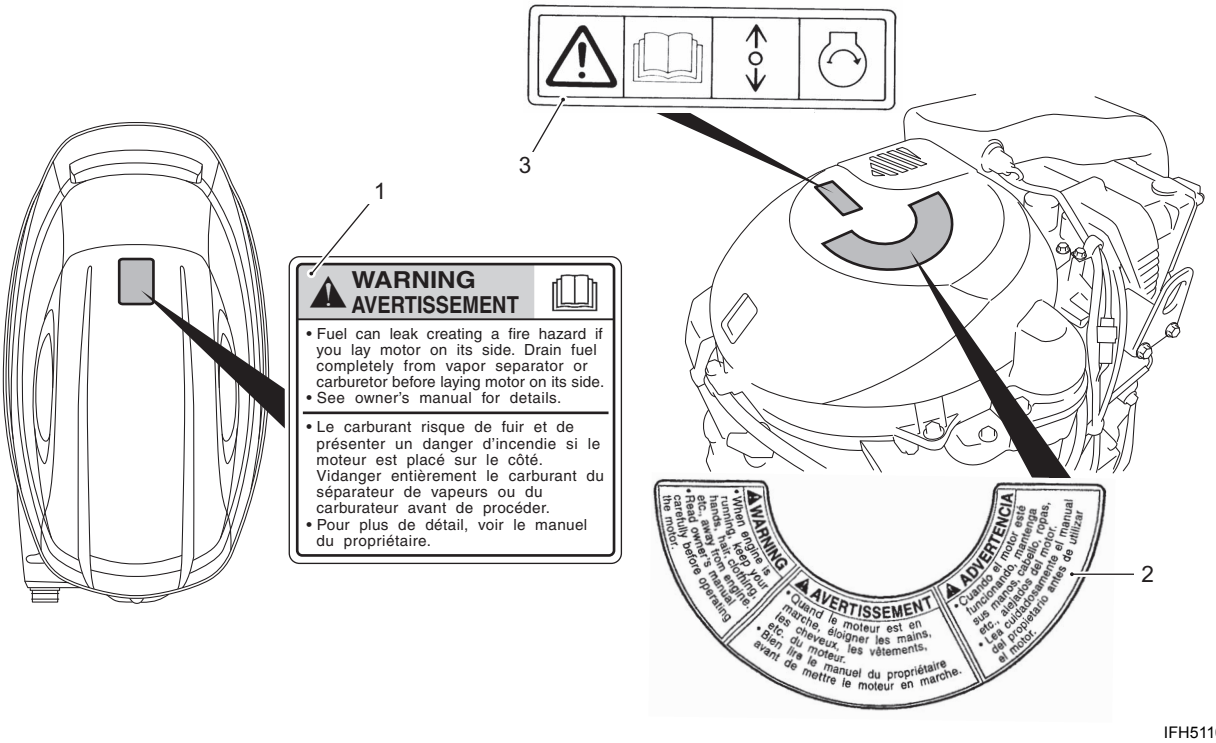

IFH511010003-06

1. Label, engine cover	2. Label, mag cover	3. Label S.I.G.P.

Outboard Motor Identification Number Location

CENFH5110101005

Model, Pre-Fix, Serial Number

The Model, Pre-fix and Serial number of motor are stamped on a plate attached to the clamp bracket.

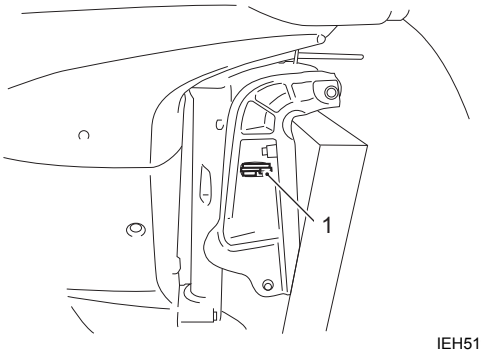

IEH511010002-03

1. Identification number plate

Example

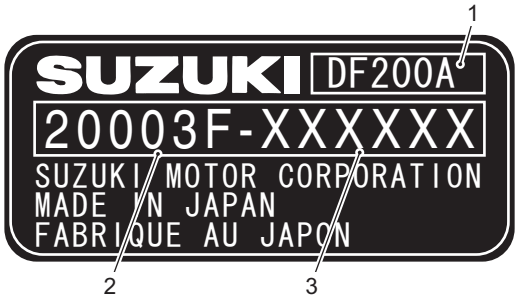

IFH511010001-01

1. Model	2. Pre-fix	3. Serial number

Engine Serial Number Location

A second engine serial number plate is pressed into a boss on the cylinder block.

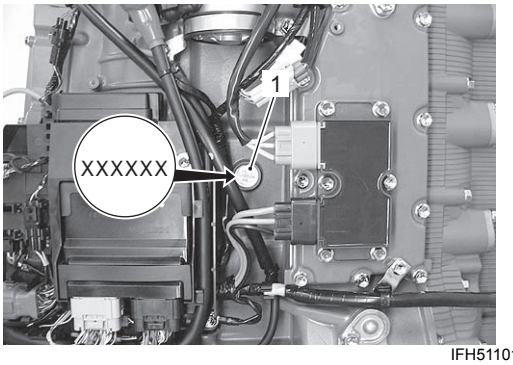

IFH511010002-01

1. Serial number plate

Fuel and Oil Recommendations

CENFH5110101006

Gasoline

NOTICE

Use of leaded gasoline can cause engine damage.
Use of improper or poor quality fuel can affect performance and may damage the motor and fuel system.

Use only unleaded gasoline. Do not use fuel having lower than the recommended octane, or fuel that may be stale or contaminated by dirt/water etc.

Suzuki highly recommends that you use alcohol-free unleaded gasoline with a minimum pump octane rating of 87 (R/2+M/2 method) or 91 (Research method). However, blends of unleaded gasoline and alcohol with equivalent octane content may be used.

Allowable maximum blend of a single additive (Not combination)
5% Methanol, 10% Ethanol, 15% MTBE

Engine Oil

NOTICE

Use of a poor quality engine oil can adversely affect engine performance and life.

Suzuki recommends that you use Suzuki Marine 4-Cycle Engine Oil or its equivalent.

Oil quality is a major contributor to your engine's performance and life. Always select good quality engine oil.
Suzuki recommends the use of SAE 10W-40 or 10W-30 SUZUKI MARINE 4-CYCLE ENGINE OIL.
If SUZUKI MARINE 4-CYCLE ENGINE OIL is not available, select a NMMA certified FC-W oil or good quality 4-cycle motor oil from the following chart according to the average temperatures in your area.

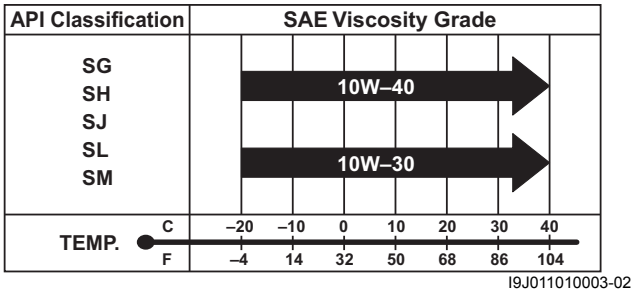

I9J011010003-02

Gear Oil

Suzuki recommends the use of SUZUKI Outboard Motor Gear Oil. If it is not available, use SAE 90 hypoid gear oil which is rated GL-5 under the API classification system.

Break-In Procedures

CENFH5110101007

NOTICE

Failure to follow the break-in procedures described below can result in severe engine damage.

Be sure to follow the engine break-in procedures described below.

The first 10 hours are critically important to ensure correct running of either a brand new motor or a motor that has been reconditioned or rebuilt. How the motor is operated during this time will have direct bearing on its life span and long-term durability.

Break-in period
10 hours

Warm-Up Recommendation

NOTICE

Running at high speed without sufficient warm-up may cause severe engine damage such as piston seizure.

Always allow sufficient idling time (5 minutes) for the engine to warm-up before running at high speed.

Allow sufficient idling time (more than 5 minutes) for the engine to warm up after cold engine starting.

Throttle Recommendation

NOTE

Avoid maintaining a constant engine speed for an extended period at any time during the engine break-in period by varying the throttle position occasionally.

First 2 hours
For the first 15 minutes, operate the engine in-gear at idling speed. During the remaining 1 hour and 45 minutes, operate the engine in-gear at less than 1/2 (half) throttle (3 000 r/min).

NOTE

The throttle may be briefly opened beyond the recommended setting to plane the boat, but must be reduced to the recommended setting immediately after planning.

Next 1 hour
Operate the engine in-gear at less than 3/4 (three - quarter) throttle (4 000 r/min).

Last 7 hours
Operate the engine in-gear at a desired engine speed. However, do not operate continuously at full throttle for more than 5 minutes.

NOTICE

Running continuously at full throttle for more than 5 minutes at a time during the last 7 hours of break-in operation may cause severe engine damage such as seizure.

During the last 7 hours of break-in operation, do not operate at wide open throttle for more than 5 minutes at a time.

Propeller Selection Guide

CENFH5110101008

An outboard motor is designed to develop its rated power within a specified engine speed range. The maximum rated power delivered by the DF200A models are shown below.

Recommended full throttle speed range

DF200AT/Z	5 500 – 6 100 r/min

NOTICE

Installing a propeller with either too much or too little pitch will cause incorrect maximum engine speed, which may result in severe damage to the motor.

Select a propeller that will allow the engine to reach the recommended operating range at full throttle with the maximum boat load.

If the standard propeller fails to meet the above requirement, use another pitch propeller to hold the engine speed within the range specified above.

Propeller size chart

Right-hand rotation propeller
Blade x Dia. (in.) x Pitch (in.)
3 x 15 and 1/2 x 17
3 x 15 and 1/4 x 19
3 x 15 x 21
3 x 14 and 3/4 x 23
3 x 14 and 1/2 x 25
3 x 14 and 1/2 x 27
3 x 16 x 15
3 x 16 x 17
3 x 16 x 18 and 1/2
3 x 16 x 20
3 x 16 x 21 and 1/2
3 x 16 x 23
3 x 16 x 24 and 1/2
3 x 16 x 26
3 x 16 x 27 and 1/2

Left-hand rotation propeller
Blade x Dia. (in.) x Pitch (in.)
3 x 15 and 1/2 x 17
3 x 15 and 1/4 x 19
3 x 15 x 21
3 x 14 and 3/4 x 23
3 x 14 and 1/2 x 25
3 x 14 and 1/2 x 27
3 x 16 x 17
3 x 16 x 18 and 1/2
3 x 16 x 20
3 x 16 x 21 and 1/2
3 x 16 x 23
3 x 16 x 24 and 1/2
3 x 16 x 26

Battery Requirement

CENFH5110101009

Suzuki recommends a 12 V cranking type lead acid battery for the DF200A.
Minimum battery requirement for starting the engine is provided below.
The battery must satisfy one of the specifications described below.

NOTE

- **The specifications listed below are the minimum battery rating requirements for starting the engine.**
- **If your boat application requires additional battery loads, it is recommended that an auxiliary battery or batteries be installed.**
- **Dual-purpose (Cranking/Deep Cycle) batteries can be used if they meet the minimum specifications listed below (MCA, CCA, or RC).**
- **Do not use a Deep Cycle battery for the main cranking battery.**
- **The use of Maintenance-Free, sealed, or Gel-Cell batteries is not recommended because they may not be compatible with Suzuki's charging system.**
- **When connecting batteries in parallel, they must be of the same type, capacity, manufacturer, and of similar age. When replacement is necessary, they should be replaced as a set.**
- **It is recommended that the battery be installed in an enclosed case.**
- **When connecting batteries, hexagon nuts must be used to secure battery leads to battery terminals.**

Battery specification

850 Marine Cranking Amps (MCA)/ABYC, or 670 Cold Cranking Amps (CCA)/SAE or 180 Reserve Capacity (RC) Minutes/SAE or 12 V 100 AH

Powerhead Direction of Rotation Description

CENFH5110101010

This outboard motor is designed with a L.H. (left hand) rotation powerhead utilizing an offset crankshaft. This design has the advantage of reducing the size of the motor and keeping the overall motor's weight closer to the boat transom and therefore closer to the boat C/G (Center of Gravity).
Rotation of the driveshaft is accomplished through a crankshaft drive gear and a driveshaft driven gear. These gears are located beneath the powerhead in the same oil bath location as the camshaft chain.
As the rotational direction of the driven gear will be opposite of the drive gear, a left hand rotation powerhead design was adopted to retain a conventional, standard rotation (right hand) propeller shaft output.

Specifications

Specifications

CENFH5110107001

NOTE

These specifications are subject to change without notice.

Model Pre-Fix

Item	Unit	Data	
		DF200AT	DF200AZ
PRE-FIX		20003F	20003Z

Dimensions and Weight

Item		Unit	Data	
			DF200AT	DF200AZ
Overall length (front to back)		mm (in.)	899 (35.4)	
Overall width (side to side)		mm (in.)	547 (21.5)	
Overall height	L	mm (in.)	1 772 (69.8)	
	X	mm (in.)	1 899 (74.8)	
Weight (without engine oil)	L	kg (lbs)	226 (498)	
	X	kg (lbs)	231 (509)	
Transom height	L	mm (in. type)	502 (20)	
	X	mm (in. type)	629 (25)	

Performance

Item	Unit	Data	
		DF200AT	DF200AZ
Maximum output	kW (PS)	147 (200)	
Recommended operating range	r/min	5 500 – 6 100	
Idle speed	r/min	650 ± 50 (in-gear: Approx. 600 – 700)	

Powerhead

Item	Unit	Data	
		DF200AT	DF200AZ
Engine type		4-stroke DOHC	
Number of cylinders		4	
Bore	mm (in.)	97 (3.82)	
Stroke	mm (in.)	97 (3.82)	
Total displacement	cm^3 (cu. in)	2 867(174.9)	
Compression ratio	: 1	10.2	
Spark plug	NGK	LKR6E	
Ignition system		Full-transistorized ignition	
Fuel supply system		Multi-point sequential electronic fuel injection	
Exhaust system		Through prop exhaust	
Cooling system		Water cooled	
Lubrication system		Wet sump by trochoid pump	
Starting system		Electric	
Throttle control		Remote control	

Fuel and Oil

Item	Unit	Data	
		DF200AT	DF200AZ
Fuel		Suzuki highly recommends the use of alcohol-free unleaded gasoline with a minimum pump octane rating of 87 (R/2+M/2 method) or 91 (Research method). However, blends of unleaded gasoline and alcohol with equivalent octane content may be used.	
Engine oil		• API classification: SG, SH, SJ, SL, SM or NMMA certified FC-W oil • Viscosity rating: SAE 10W-40 or 10W-30, NMMA FC-W 10W-40 or 10W-30	
Engine oil amounts	L (US/Imp. qt)	8.0 (8.5/7.0): Oil change only 8.5 (9.0/7.5): Oil filter change	
Gear oil		SUZUKI Outboard Motor Gear Oil or SAE 90 hypoid gear oil, API classification GL-5.	
Gearcase oil capacity	ml (US/Imp. oz)	1 100 (37.2/38.7)	

Bracket

Item	Unit	Data	
		DF200AT	DF200AZ
Trim angle	degree	0 – 21 (–6 to 15)	
Number of trim position		PTT system	
Maximum tilt angle	degree	75 (–6 to 69)	

Lower Unit

Item	Unit	Data	
		DF200AT	DF200AZ
Reversing system		Gear	
Transmission		Forward-Neutral-Reverse	
Reduction system		Bevel gear	
Gear ratio		12 : 25 (2.08)	
Drive line impact protection		Spline drive rubber hub	
Propeller shaft rotation (When shift into forward)		DF200AT: Clockwise DF200AZ: Counterclockwise	
Propeller		Right-hand rotation propeller	
		Blade x Dia. (in.) x Pitch (in.)	
		3 x 15 and 1/2 x 17 3 x 15 and 1/4 x 19 3 x 15 x 21 3 x 14 and 3/4 x 23 3 x 14 and 1/2 x 25 3 x 14 and 1/2 x 27 3 x 16 x 15 3 x 16 x 17 3 x 16 x 18 and 1/2 3 x 16 x 20 3 x 16 x 21 and 1/2 3 x 16 x 23 3 x 16 x 24 and 1/2 3 x 16 x 26 3 x 16 x 27 and 1/2	
		Left-hand rotation propeller	
		Blade x Dia. (in.) x Pitch (in.)	
		3 x 15 and 1/2 x 17 3 x 15 and 1/4 x 19 3 x 15 x 21 3 x 14 and 3/4 x 23 3 x 14 and 1/2 x 25 3 x 14 and 1/2 x 27 3 x 16 x 17 3 x 16 x 18 and 1/2 3 x 16 x 20 3 x 16 x 21 and 1/2 3 x 16 x 23 3 x 16 x 24 and 1/2 3 x 16 x 26	

Reduction System

Item	Data	
	DF200AT	DF200AZ
1st reduction gear ratio (Crankshaft drive gear: Driven gear)	30 : 36 (1.20)	
2nd reduction gear ratio (Lower unit gear)	12 : 25 (2.08)	
Total reduction gear ratio	2.50 (36/30 x 25/12)	

Service Data

CENFH5110107002

NOTE

These service data are subject to change without notice.

Powerhead

Item	Unit	Data	
		DF200AT	DF200AZ
Recommended operating range	r/min	5 500 – 6 100	
Idle speed	r/min	600 – 700 (in-gear: 600 – 700)	
**Cylinder compression pressure	kPa (kgf/cm^2, psi.)	1 100 – 1 700 (11 – 17, 156 – 242)	
**Cylinder compression pressure max. difference between cylinders	kPa (kgf/cm^2, psi.)	100 (1.0, 14)	
**Engine oil pressure	kPa (kgf/cm^2, psi.)	400 – 600 (4.0 – 6.0, 57 – 85) at 3 000 r/min (at normal operating temp.)	
Engine oil		• API classification: SG, SH, SJ, SL, SM or NMMA certified FC-W oil • Viscosity rating: SAE 10W-40 or 10W-30, NMMA FC-W 10W-40 or 10W-30	
Engine oil amounts	L (US/Imp. qt)	8.0 (8.5/7.0): Oil change only 8.5 (9.0/7.5): Oil filter change	
Thermostat operating temperature	°C (°F)	48 – 52 (118 – 125)	

**Figures shown are guidelines only, not absolute service limits.

Cylinder Head / Camshaft

Item			Unit	Data	
				DF200AT	DF200AZ
Cylinder head distortion		Limit	mm (in.)	0.05 (0.002)	
Manifold seating faces distortion		Limit	mm (in.)	0.10 (0.004)	
Cam height	IN	std.	mm (in.)	45.330 – 45.490 (1.7846 – 1.7909)	
		Limit	mm (in.)	45.230 (1.7807)	
	EX	std.	mm (in.)	44.420 – 44.580 (1.7488 – 1.7551)	
		Limit	mm (in.)	44.320 (1.7449)	
Camshaft journal oil clearance	Top, 2nd, 3rd, 4th, 5th	std.	mm (in.)	0.043 – 0.085 (0.0017 – 0.0033)	
		Limit	mm (in.)	0.120 (0.0047)	
Camshaft journal (housing) inside diameter	Top, 2nd, 3rd, 4th, 5th	std.	mm (in.)	26.000 – 26.021 (1.0236 – 1.0244)	
		Limit	mm (in.)	—	
Camshaft journal outside diameter	Top, 2nd, 3rd, 4th, 5th	std.	mm (in.)	25.936 – 25.957 (1.0211 – 1.0219)	
		Limit	mm (in.)	—	
Camshaft runout		Limit	mm (in.)	0.10 (0.004)	
Cylinder head bore to tappet clearance		std.	mm (in.)	0.025 – 0.066 (0.0010 – 0.0026)	
		Limit	mm (in.)	0.150 (0.0059)	
Tappet outer diameter		std.	mm (in.)	33.959 – 33.975 (1.3370 – 1.3376)	
Cylinder head tappet bore		std.	mm (in.)	34.000 – 34.025 (1.3386 – 1.3396)	

Valve / Valve Guide

Item			Unit	Data	
				DF200AT	DF200AZ
Valve diameter		IN	mm (in.)	37.9 (1.49)	
		EX	mm (in.)	31.4 (1.2)	
Tappet clearance (Cold engine condition)	IN	std.	mm (in.)	0.23 – 0.27 (0.009 – 0.011)	
	EX	std.	mm (in.)	0.30 – 0.34 (0.012 – 0.013)	
Valve seat angle	IN		—	30°, 45°, 60°	
	EX		—	30°, 45°, 60°	
Valve guide to valve stem clearance	IN	std.	mm (in.)	0.020 – 0.047 (0.0008 – 0.0019)	
		Limit	mm (in.)	0.070 (0.0028)	
	EX	std.	mm (in.)	0.045 – 0.072 (0.0018 – 0.0028)	
		Limit	mm (in.)	0.090 (0.0035)	
Valve guide inside diameter	IN, EX	std.	mm (in.)	5.500 – 5.512 (0.2165 – 0.2170)	
Valve guide protrusion	IN, EX	std.	mm (in.)	11.4 – 11.8 (0.45 – 0.46)	
Valve stem outside diameter	IN	std.	mm (in.)	5.465 – 5.480 (0.2152 – 0.2157)	
	EX	std.	mm (in.)	5.440 – 5.455 (0.2142 – 0.2148)	
Valve stem deflection	IN	Limit	mm (in.)	0.14 (0.006)	
	EX	Limit	mm (in.)	0.18 (0.007)	
Valve stem runout	IN, EX	Limit	mm (in.)	0.05 (0.002)	
Valve head radial runout	IN, EX	Limit	mm (in.)	0.08 (0.003)	
Valve head thickness	IN	std.	mm (in.)	1.1 (0.04)	
		Limit	mm (in.)	0.7 (0.03)	
	EX	std.	mm (in.)	1.0 (0.04)	
		Limit	mm (in.)	0.7 (0.03)	
Valve seat contact width	IN	std.	mm (in.)	1.1 – 1.3 (0.04 – 0.05)	
	EX	std.	mm (in.)	1.1 – 1.3 (0.04 – 0.05)	
Valve spring free length		std.	mm (in.)	39.75 (1.56)	
		Limit	mm (in.)	38.20 (1.50)	
Valve spring preload		std.	N (kg, lbs)	147 – 173 (14.7 – 17.3, 32.4 – 38.1) at 31.1 mm (1.22 in.)	
		Limit	N (kg, lbs)	136 (13.6, 30.0) at 31.1 mm (1.22 in.)	
Valve spring squareness		Limit	mm (in.)	2.0 (0.08)	

Cylinder / Piston / Piston Ring

Item			Unit	Data	
				DF200AT	DF200AZ
Cylinder distortion		Limit	mm (in.)	0.05 (0.002)	
Piston to cylinder clearance		std.	mm (in.)	0.045 – 0.065 (0.0018 – 0.0026)	
		Limit	mm (in.)	0.10 (0.0039)	
Cylinder bore		std.	mm (in.)	97.000 – 97.020 (3.8189 – 3.8197)	
Cylinder measuring position			mm (in.)	50 (2.0) from cylinder top surface	
Piston skirt diameter		std.	mm (in.)	96.945 – 96.965 (3.8167 – 3.8175)	
Piston measuring position			mm (in.)	12 (0.47) from piston skirt end	
Cylinder bore wear		Limit	mm (in.)	0.10 (0.0039)	
Piston ring end gap	1st	std.	mm (in.)	0.20 – 0.30 (0.008 – 0.012)	
		Limit	mm (in.)	0.70 (0.028)	
	2nd	std.	mm (in.)	0.30 – 0.45 (0.012 – 0.018)	
		Limit	mm (in.)	1.00 (0.039)	
Piston ring free end gap	1st	std.	mm (in.)	Approx. 13.5 (0.53)	
		Limit	mm (in.)	10.8 (0.43)	
	2nd	std.	mm (in.)	Approx. 13.6 (0.54)	
		Limit	mm (in.)	10.9 (0.43)	
Piston ring to groove clearance	1st	std.	mm (in.)	0.030 – 0.070 (0.0012 – 0.0028)	
		Limit	mm (in.)	0.12 (0.005)	
	2nd	std.	mm (in.)	0.020 – 0.060 (0.0008 – 0.0024)	
		Limit	mm (in.)	0.10 (0.004)	
Piston ring groove width	1st	std.	mm (in.)	1.22 – 1.24 (0.048 – 0.049)	
	2nd	std.	mm (in.)	1.21 – 1.23 (0.048 – 0.048)	
	Oil	std.	mm (in.)	2.51 – 2.53 (0.099 – 0.100)	
Piston ring thickness	1st	std.	mm (in.)	1.17 – 1.19 (0.046 – 0.047)	
	2nd	std.	mm (in.)	1.17 – 1.19 (0.046 – 0.047)	
Pin clearance in piston pin hole		std.	mm (in.)	—	
		Limit	mm (in.)	—	
Piston pin outside diameter		std.	mm (in.)	21.995 – 22.000 (0.8659 – 0.8661)	
		Limit	mm (in.)	—	
Piston pin hole diameter		std.	mm (in.)	22.006 – 22.014 (0.8664 – 0.8667)	
		Limit	mm (in.)	—	
Pin clearance in conrod small end		std.	mm (in.)	—	
		Limit	mm (in.)	—	

Crankshaft / Conrod

Item		Unit	Data	
			DF200AT	DF200AZ
Conrod small end inside diameter	std.	mm (in.)	21.968 – 21.979 (0.8649 – 0.8653)	
Conrod big end oil clearance	std.	mm (in.)	0.045 – 0.063 (0.0018 – 0.0025)	
	Limit	mm (in.)	0.080 (0.0031)	
Conrod big end inside diameter	std.	mm (in.)	57.000 – 57.018 (2.2441 – 2.2448)	
Crank pin outside diameter	std.	mm (in.)	53.982 – 54.000 (2.1253 – 2.1260)	
Crank pin outside diameter difference (Out-of-round and taper)	Limit	mm (in.)	0.010 (0.0004)	
Conrod bearing thickness	std.	mm (in.)	1.482 – 1.497 (0.0583 – 0.0589)	
Conrod big end side clearance	std.	mm (in.)	0.300 – 0.450 (0.0118 – 0.0177)	
	Limit	mm (in.)	0.550 (0.0217)	
Conrod big end width	std.	mm (in.)	22.750 – 22.800 (0.8957 – 0.8976)	
Crank pin width	std.	mm (in.)	23.100 – 23.200 (0.9094 – 0.9134)	
Crankshaft center journal runout	Limit	mm (in.)	0.04 (0.002)	
Crankshaft journal oil clearance	std.	mm (in.)	0.030 – 0.050 (0.0012 – 0.0020)	
	Limit	mm (in.)	0.065 (0.0026)	
Crankcase bearing holder inside diameter	std.	mm (in.)	70.000 – 70.018 (2.7559 – 2.7566)	
Crankshaft journal outside diameter	std.	mm (in.)	64.982 – 65.000 (2.5583 – 2.5591)	

Item		Unit	Data	
			DF200AT	DF200AZ
Crankshaft journal outside diameter difference (Out-of-round and taper)	Limit	mm (in.)	0.010 (0.0004)	
Crankshaft bearing thickness	std.	mm (in.)	2.497 – 2.512 (0.0983 – 0.0989)	
Crankshaft thrust play	std.	mm (in.)	0.11 – 0.31 (0.004 – 0.012)	
	Limit	mm (in.)	0.35 (0.014)	
Crankshaft thrust bearing thickness	std.	mm (in.)	2.425 – 2.475 (0.0955 – 0.0974)	

Electrical

Item		Unit	Data	
			DF200AT	DF200AZ
Ignition timing		Degree	0° ± 6° BTDC – 26° BTDC	
Over revolution limiter		r/min	6 300	
CKP sensor resistance		Ω at 20 °C	168 – 252	
CMP sensor resistance		Ω at 20 °C	—	
Ignition coil resistance	Primary	Ω at 20 °C	—	
	Secondary	kΩ at 20 °C	—	
Battery charge coil resistance		Ω at 20 °C	0.14 – 0.30	
Battery charge coil output (12 V)		Watt	528	
Standard spark plug	Type	NGK	LKR6E	
	Gap	mm (in.)	0.8 – 0.9 (0.031 – 0.035)	
Fuse amp. rating		A	Main fuse: 60 Starter motor: 30 Ignition coil, Injector, ECM, F/P: 30 PTT switch: 10 IAC valve, VSV, VVT: 10 Isolator: 30	
Recommended battery capacity (12 V)		Ah (kC)	100 (360) or larger	
Fuel injector resistance		Ω at 20 °C	10 – 14	
IAC valve resistance		Ω at 20 °C	25 – 34	
IAT sensor/Cylinder temp. sensor/Ex. mani. temp. sensor (Thermistor characteristic)		kΩ at 25 °C	1.8 – 2.3	
ECM main relay coil resistance		Ω at 20 °C	145 – 190	
Starter motor relay coil resistance		Ω at 20 °C	145 – 190	
PTT motor relay coil resistance		Ω at 20 °C	16 – 24	

Starter Motor

Item		Unit	Data	
			DF200AT	DF200AZ
Max. continuous time of use		Sec.	30	
Motor output		kW	1.4	
Brush length	std.	mm (in.)	16.0 (0.63)	
	Limit	mm (in.)	12.0 (0.47)	
Commutator undercut	std.	mm (in.)	0.5 – 0.8 (0.02 – 0.03)	
	Limit	mm (in.)	0.2 (0.01)	
Commutator outside diameter	std.	mm (in.)	29.0 (1.14)	
	Limit	mm (in.)	28.0 (1.10)	

PTT Motor

Item		Unit	Data	
			DF200AT	DF200AZ
Brush length	std.	mm (in.)	9.8 (0.39)	
	Limit	mm (in.)	5.5 (0.22)	
Commutator outside diameter	std.	mm (in.)	22.0 (0.87)	
	Limit	mm (in.)	21.0 (0.83)	

Self-Diagnostic Code
0: OFF, 1: ON

Failed item	Code	Lamp flashing pattern	Fail-safe system activating
MAP sensor 1	3 – 4	 MCODE00D34-0-01	YES
Cylinder temp. sensor	1 – 4	 MCODE00D14-0-01	YES
IAT sensor	2 – 3	 MCODE00D23-0-01	YES
CKP sensor	4 – 2	 MCODE00D42-0-01	NO
CMP sensor #1	2 – 4	 MCODE00D24-0-01	NO
Air intake system	2 – 2	 MCODE00D22-0-01	YES
MAP sensor 2	3 – 2	 MCODE00D32-0-01	NO
Exhaust manifold temp. sensor	1 – 5	 MCODE00D15-0-01	YES
Fuel injector	4 – 3	 MCODE00D43-0-01	NO
Throttle position sensor	2 – 1	 MCODE00D21-0-01	YES
Shift position sensor	1 – 2	 MCODE00D12-0-01	YES
CMP sensor #2 (VVT)	2 – 6	 MCODE00D26-0-01	YES
VVT advance	5 – 1	 MCODE00D51-0-01	YES
Neutral switch	3 – 3	 MCODE00D33-0-01	NO
Oil control valve	6 – 1	 MCODE00D61-0-01	NO
Rectifier/Regulator (Over-charging)	1 – 1	 MCODE00D11-0-01	NO
Oil pressure switch	5 – 3	 MCODE00D53-0-01	NO
Trim sensor	3 – 7	 MCODE00D37-0-01	NO
Knock sensor	5 – 4	 MCODE00D54-0-01	YES
O2 sensor	3 – 6	 MCODE00D36-0-04	YES
O2 sensor heater	6 – 3	 MCODE00D63-0-01	YES

Tightening Torque Specifications

CENFH5110107003

NOTICE

Failure to use the correct fasteners or to properly use fasteners can cause parts or system damage.

- **When fasteners are removed, always reinstall them at the locations from which they were removed.**
- **All fasteners must be replaced with fasteners having the same part number. If a fastener of the correct part number is not available, a fastener of the same size having equal or higher strength may be used.**

Important Fasteners

Item		Thread diameter	Tightening torque		
			N·m	kgf-m	lbf-ft
Cylinder head cover bolt		6 mm	11	1.1	8.0
Cylinder head bolt		8 mm	23	2.3	16.5
		12 mm	86	8.6	62.0
Crankcase bolt	Outside	10 mm	37	3.7	27.0
	Inside	11 mm	58	5.8	42.0
Crankshaft drive gear bolt		10 mm	48	4.8	34.5
Conrod cap bolt		9 mm	30 N·m (3.0 kgf-m, 21.5 lb-ft), then plus turn in 60 degrees.		
Camshaft housing bolt		6 mm	12	1.2	8.5
Oil pump bolt		8 mm	23	2.3	16.5
IN. camshaft timing sprocket		—	60	6.0	43.5
EX. camshaft timing sprocket		—	78	7.8	56.5
OCV bolt		6 mm	12	1.2	8.5
Chain tensioner adjuster bolt		6 mm	11	1.1	8.0
Timing chain guide bolt		8 mm	23	2.3	16.5
Intake manifold bolt/nut		8 mm	23	2.3	16.5
Oil pressure switch		—	13	1.3	9.5
Fuel delivery pipe bolt		8 mm	23	2.3	16.5
Fuel delivery pipe plug/union bolt	Upper	14 mm	35	3.5	25.5
	Lower	14 mm	35	3.5	25.5
Low pressure fuel pump bolt		6 mm	10	1.0	7.0
Thermostat cover bolt		6 mm	11	1.1	8.0
Flywheel bolt		12 mm	118	11.8	85.5
Starter motor mounting bolt		8 mm	23	2.3	16.5
Engine oil filter		—	14	1.4	10.0
Engine oil drain plug		12 mm	13	1.3	9.5
Power unit mounting bolt		8 mm	23	2.3	16.5
		10 mm	50	5.0	36.0
Driveshaft housing bolt		10 mm	50	5.0	36.0
Upper mount nut		14 mm	100	10.0	72.5
Upper mount cover bolt		10 mm	50	5.0	36.0
Lower mount bolt		14 mm	100	10.0	72.5
Clamp bracket shaft nut		7/8-14 UNF	43	4.3	31.0
Water pump case bolt		8 mm	17	1.7	12.5
Driveshaft oil seal housing		—	100	10.0	72.5
Gearcase bolt		10 mm	55	5.5	40.0
		12 mm	83	8.3	60.0
Propeller shaft bearing housing bolt		8 mm	23	2.3	16.5
Pinion nut		16 mm	145	14.5	105.0
Propeller nut		18 mm	55	5.5	40.0

General Bolt

NOTE

These value are only applicable when torque for a general bolt is not listed in the "Important Fasteners" table.

Type of bolt	Thread diameter	Tightening torque		
		N·m	kgf-m	lbf-ft
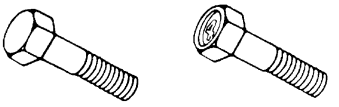 I9J011010014-01 **(Conventional or "4" marked bolt)**	5 mm	2 – 4	0.2 – 0.4	1.5 – 3.0
	6 mm	4 – 7	0.4 – 0.7	3.5 – 5.0
	8 mm	10 – 16	1.0 – 1.6	7.0 – 11.5
	10 mm	22 – 35	2.2 – 3.5	16.0 – 25.5
 I9J011010015-01 **(Stainless steel bolt)**	5 mm	2 – 4	0.2 – 0.4	1.5 – 3.0
	6 mm	6 – 10	0.6 – 1.0	4.5 – 7.0
	8 mm	15 – 20	1.5 – 2.0	11.0 – 14.5
	10 mm	34 – 41	3.4 – 4.1	24.5 – 29.5
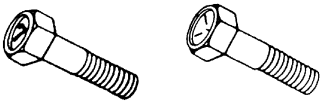 I9J011010016-01 **("7" marked bolt)**	5 mm	3 – 6	0.3 – 0.6	2.0 – 4.5
	6 mm	8 – 12	0.8 – 1.2	6.0 – 8.5
	8 mm	18 – 28	1.8 – 2.8	13.0 – 20.0
	10 mm	40 – 60	4.0 – 6.0	29.0 – 43.5

Special Tools and Equipment

Recommended Service Material

CENFH5110108001

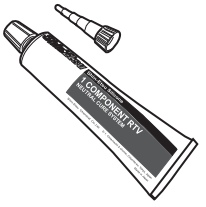 **93691–80030** SUZUKI Silicone Seal (100 g)	 **99000–22B22** SUZUKI Outboard Motor Gear Oil	 **99000–25350** SUZUKI Water Resistant Grease EP2 (250 g)	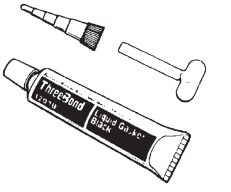 **99000–31140** SUZUKI Bond 1207B (100 g)	 **99000–32050** SUZUKI Thread Lock 1342 (50 g)
 **99000–22810** PTT Fluid				

Special Tool

CENFH5110108002

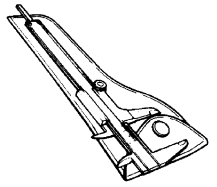 **09900–20101** Vernier calipers (150 mm)	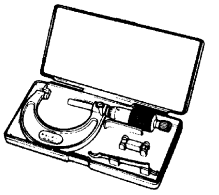 **09900–20202** Micrometer (25 – 50 mm)	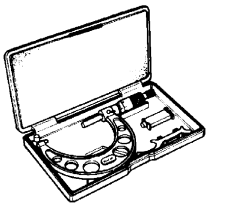 **09900–20203** Micrometer (50 – 75 mm)	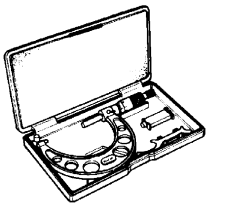 **09900–20204** Micrometer (75 – 100 mm)	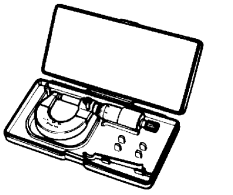 **09900–20205** Micrometer (0 – 25 mm)
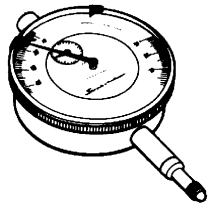 **09900–20602** Dial gauge	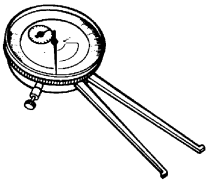 **09900–20605** Dial calipers (10 – 34 mm)	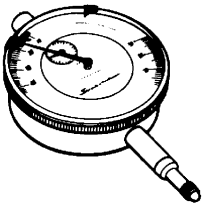 **09900–20606** Dial gauge	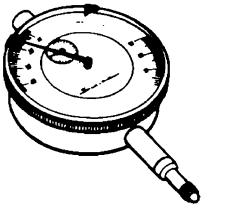 **09900–20607** Dial gauge	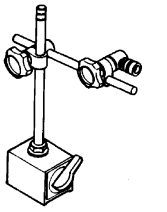 **09900–20701** Magnetic stand
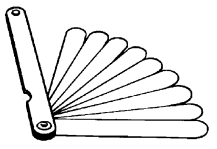 **09900–20803** Thickness gauge	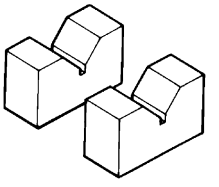 **09900–21304** Steel “V” block set	 **09900–22301** Plastigauge (0.025 – 0.076 mm)	 **09900–22302** Plastigauge (0.051 – 0.125 mm)	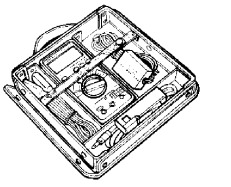 **09900–25008** Multi circuit tester set
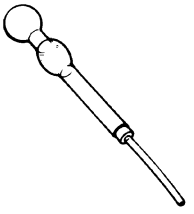 **09900–28403** Hydrometer	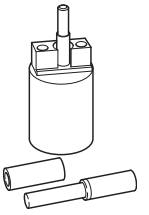 **09910–39610** Piston pin remover and installer	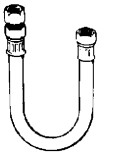 **09912–58432** Fuel pressure hose	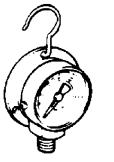 **09912–58442** Fuel pressure gauge	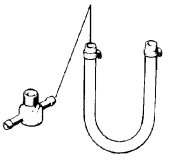 **09912–58490** 3-way joint & hose
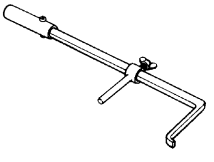 **09913–50121** Oil seal remover	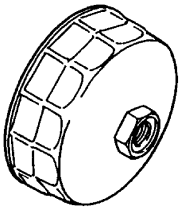 **09915–47341** Oil filter wrench	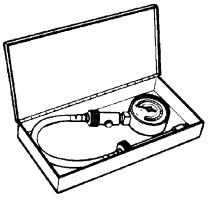 **09915–64512** Compression gauge	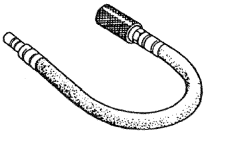 **09915–64530** Compression gauge hose	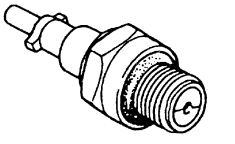 **09915–64550** Compression gauge hose attachment

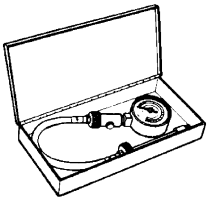 **09915–77311** Oil pressure gauge	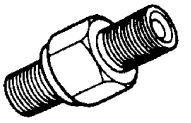 **09915–78211** Oil pressure gauge adapter	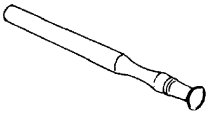 **09916–10911** Valve lapper	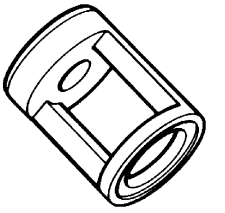 **09916–14521** Valve lifter attachment	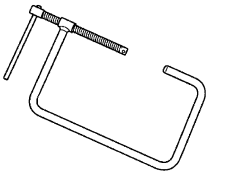 **09916–19030** Valve lifter
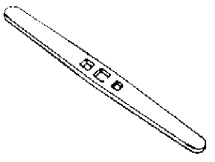 **09916–34542** Valve guide reamer handle	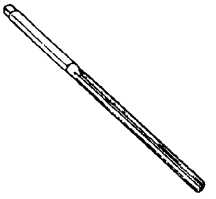 **09916–34550** Valve guide reamer (ø 5.5 mm)	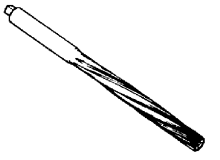 **09916–37320** Valve guide reamer (ø 10.5 mm)	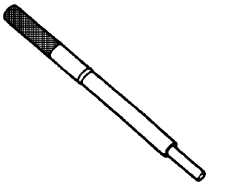 **09916–44310** Valve guide remover	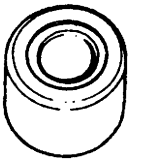 **09916–56011** Valve guide installer attachment
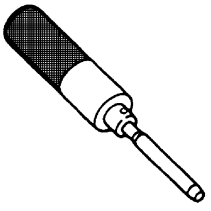 **09916–57330** Valve guide installer	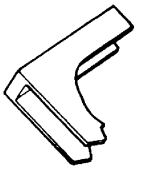 **09916–69310** Tappet holder	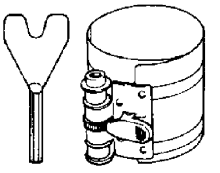 **09916–77310** Piston ring compressor	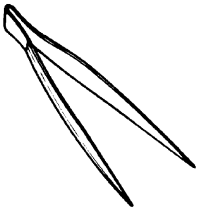 **09916–84511** Tweezers	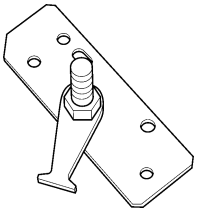 **09916–99312** Flywheel holder
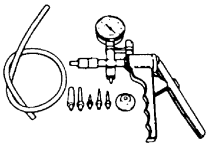 **09917–47011** Vacuum pump gauge	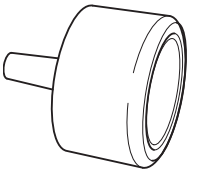 **09917–49610** Vacuum pump adapter	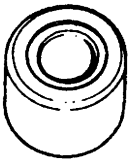 **09917–98221** Valve guide stem seal installer attachment	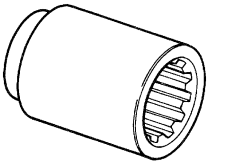 **09921–29410** Driveshaft holder	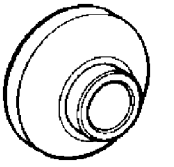 **09922–59410** Propeller shaft housing installer
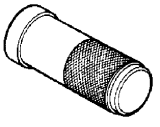 **09922–59420** Housing installer handle	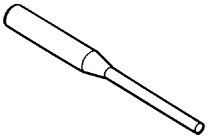 **09922–89810** Shift lock pin remover	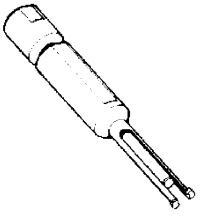 **09923–73210** Bearing remover	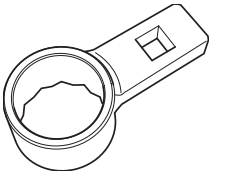 **09926–29310** Driveshaft housing remover	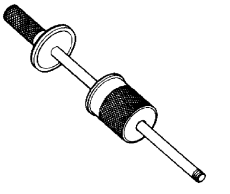 **09930–30104** Sliding hammer

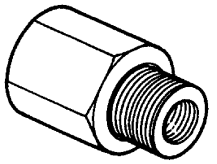 **09930–30161** Propeller shaft remover	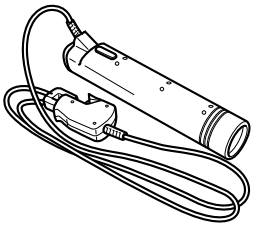 **09930–76310** Timing light	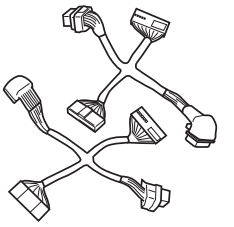 **09930–88730** 36-pin test cord set	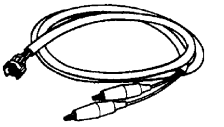 **09930–89260** Injector test cord (A)	 **09933–39810** O2 sensor socket
 **09940–44121** Air pressure gauge	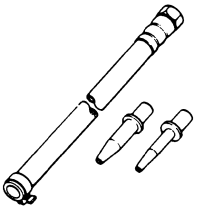 **09940–44130** Attachment	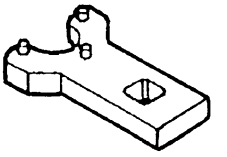 **09944–09810** PTT trim cap tool	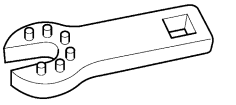 **09944–09820** PTT cylinder cap tool	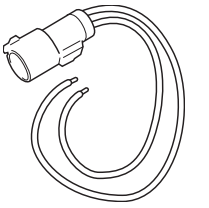 **09945–79310** PTT cable extension
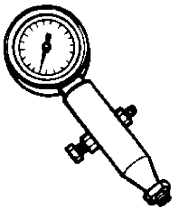 **09950–69512** Gearcase oil leakage tester	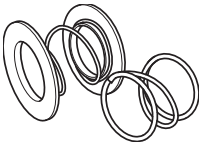 **09951–09310** Gear adjust spring set	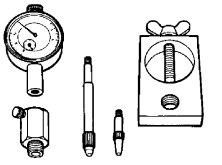 **09951–09530** Gear adjusting gauge	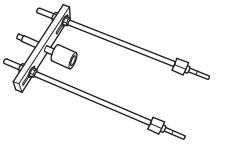 **09951–99310** Gear holder	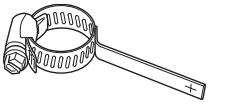 **09952–09310** Backlash indicator tool
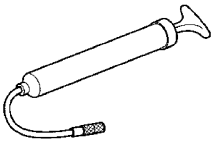 **09952–99320** Hand air pump	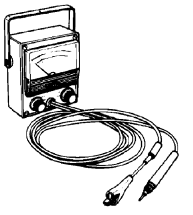 Stevens peak reading voltmeter CD-77			

Maintenance and Tune-Up

Precautions

Precautions for Maintenance

CENFH5110200001

The “Periodic Maintenance Schedule Chart” lists the recommended intervals for all the required periodic service work necessary to keep the motor operating at peak performance and economy.
Maintenance intervals should be judged by number of hours or months, whichever comes first.

NOTE

More frequent servicing should be performed on outboard motors that are used under severe conditions.

General Description

Recommended Oil and Lubricants

CENFH5110201001

Refer to “Fuel and Oil Recommendations” in Section 0A (Page 0A-3).

Scheduled Maintenance

Periodic Maintenance Schedule Chart

CENFH5110205001

NOTE

I = Inspect and clean, adjust, lubricate or replace, if necessary
T = Tighten
R = Replace

Item to be serviced	Interval			
	Initial 20 hrs. or 1 month	Every 100 hrs. or 12 months	Every 200 hrs. or 12 months	Every 300 hrs. or 36 months
Spark plug	—	I	—	—
Breather & Fuel line	I	I	—	—
Engine oil	R	R	—	—
Gear oil	R	R	—	—
Lubrication	I	I	—	—
Anodes (External)	I	I	—	—
Anodes (Internal powerhead)	—	I	—	—
Bonding wires	I	I	—	—
Battery	I	I	—	—
Engine oil filter	R	—	R	—
High pressure fuel filter	Replace every 1 000 hours.			
Low pressure fuel filter	I	I	—	—
	Replace every 400 hours or 2 years.			
Ignition timing	—	—	I	—
Idle speed	I	—	I	—
Balancer chain	Replace every 1 600 hours.			
Tappet clearance	—	—	—	I
Water pump	—	—	I	—
Water pump impeller	—	—	I	R
Propeller nut & pin	I	I	—	—
Bolt & Nuts	T	T	—	—
Thermostat	—	I	—	—

Lubrication Point

CENFH5110205002

Proper lubrication is important for the safe, smooth operation and long life of each working part of the outboard motor. Apply Suzuki Water Resistant Grease to the following point.

Lubricate

Initially after 20 hours (1 month) and every 100 hours (12 months)

: Grease 99000–25350 (SUZUKI Water Resistant Grease EP2 (250 g))

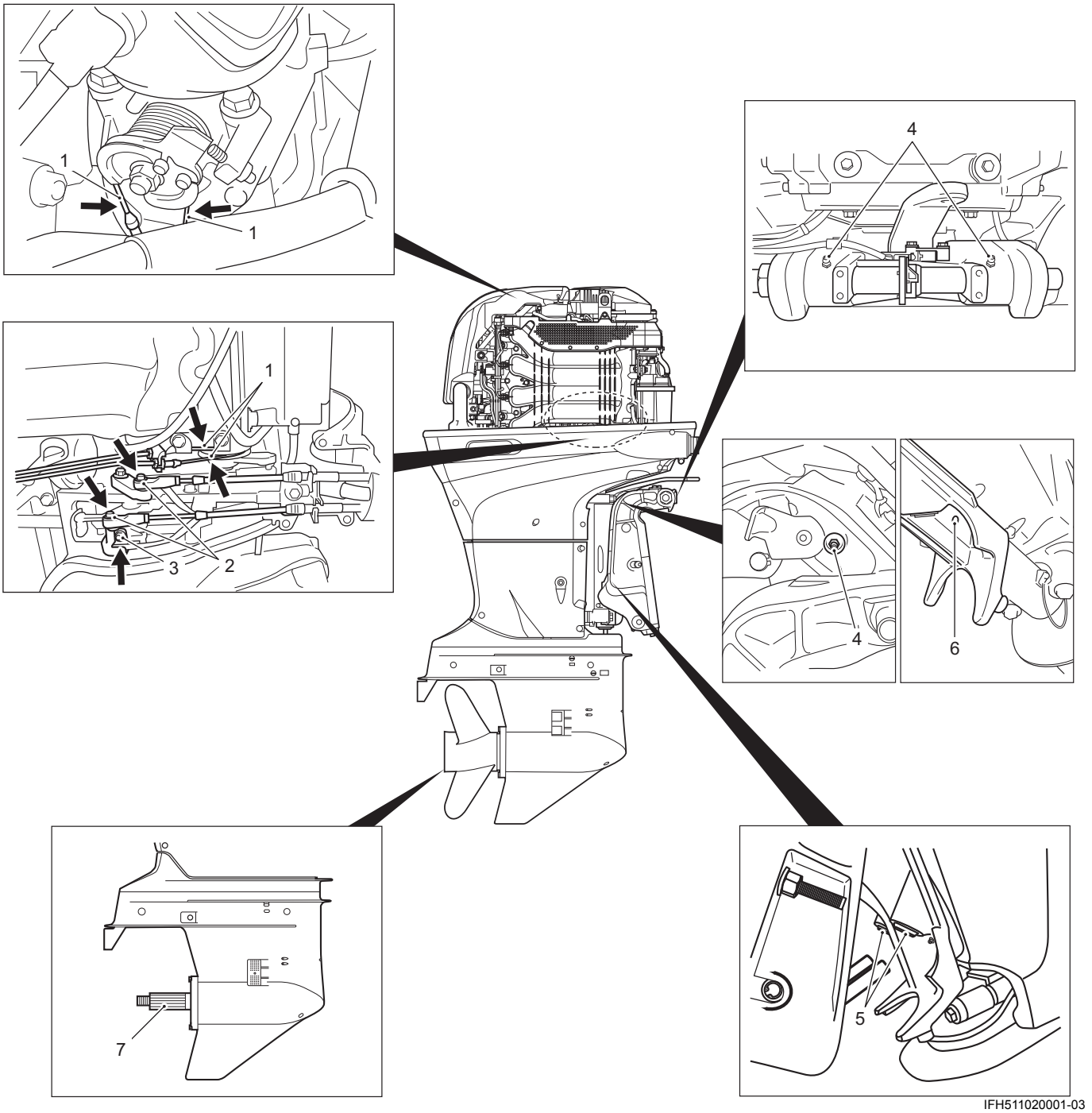

IFH511020001-03

1. Throttle cable	3. Clutch lever shaft	5. Trim ram pad	7. Propeller shaft
2. Shift/clutch link	4. Grease nipple, swivel bracket	6. Grease nipple, steering bracket	

Service Instructions

Engine Oil Level Check

CENFH5110206001

Inspect oil level
Before every use

1) Place outboard motor upright on a level surface.
2) Remove motor cover.
3) Remove the oil level dipstick (1) and wipe it clean.

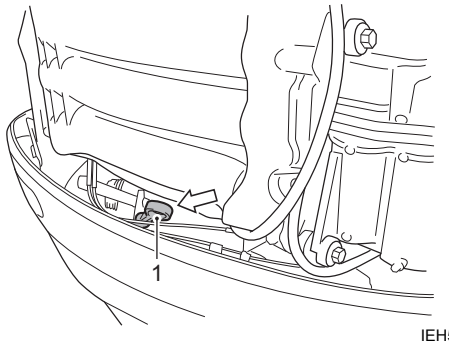

IEH511020002-01

4) Reinsert dipstick fully into dipstick tube, then remove it to check oil level.
5) Oil level should be between full level Max. mark (hole) and low level Min. mark (hole).
If level is low, add recommended oil to full level Max. mark.

Recommended engine oil

- **4 stroke motor oil**
- **NMMA certified FC-W oil.**
or API classification:
SG, SH, SJ, SL, SM.
- **Viscosity rating:**
SAE 10W-40 or 10W-30,
NMMA FC-W 10W-40 or 10W-30

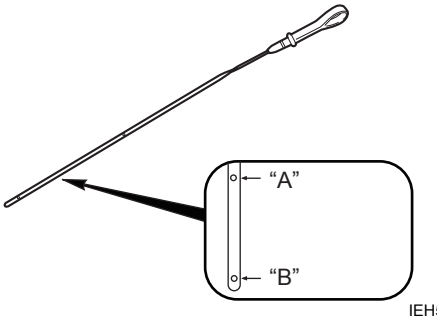

IEH511020003-01

"A": Max. mark (hole)	"B": Min. mark (hole)

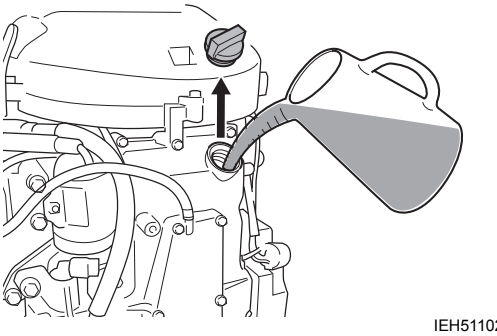

IEH511020004-01

Engine Oil Change and Engine Oil Filter Replacement

CENFH5110206002

Change engine oil
Initially after 20 hours (1 month) and every 100 hours (12 months)

Replace engine oil filter
Initially after 20 hours (1 month) and every 200 hours (12 months)

NOTE

- **Engine oil should be changed while engine is warm.**
- **When replacing engine oil filter, change engine oil at the same time.**

Engine Oil Change

1) Place outboard motor upright on a level surface.
2) Remove oil filler cap (1).

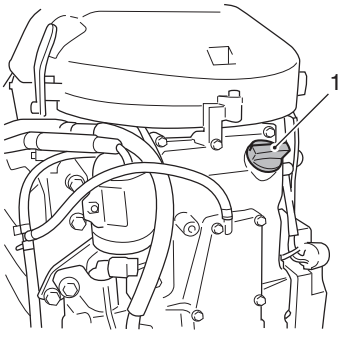

IEH511020005-01

3) Place a container under engine oil drain plug.
4) Remove engine oil drain plug (2) and gasket (3) to drain engine oil.



IEH511020006-01

5) Install new gasket and oil drain plug.
Tighten engine oil drain plug to specified torque.

NOTICE

A previously-used gasket may leak, resulting in engine damage.

To avoid water entry into oil pan or oil leakage into the environment do not reuse gasket once removed.
Always use a new one.

Tightening torque
Engine oil drain plug (a): 13 N·m (1.3 kgf-m, 9.5 lbf-ft)

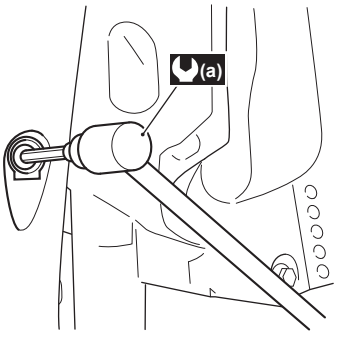

IEH511020007-01

6) Pour recommended engine oil into oil filler opening, then install oil filler cap.

Recommended engine oil

- **4 stroke motor oil**
- **NMMA certified FC-W oil.**
  or API classification:
  SG, SH, SJ, SL, SM.
- **Viscosity rating:**
  SAE 10W-40 or 10W-30,
  NMMA FC-W 10W-40 or 10W-30

Engine oil amounts
Oil change only: 8.0 L (8.5/7.0 US/Imp.qt)
Oil filter change: 8.5 L (9.0/7.5 US/Imp.qt)

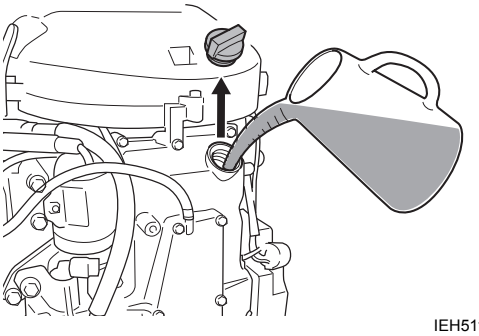

IEH511020004-01

7) Reset oil change reminder system's operation time to zero (cancellation).

NOTE

Refer to "Oil Change Reminder System Description" in Section 1A (Page 1A-14).

8) Start engine and allow it to run for several minutes at idle speed.
Check oil drain plug for oil leakage.
Turn off engine and wait for approx. two minutes, then recheck engine oil level.

Engine Oil Filter Replacement

1) Drain engine oil in the same manner of engine oil change procedure.
2) Remove STBD lower side cover.
   Refer to “Lower Side Cover Removal and Installation” in Section 2A (Page 2A-3).
3) Place a shop cloth under the oil filter before removal to absorb any oil released.
4) Using the oil filter wrench to loosen the oil filter, then remove the filter and O-ring.

   Special tool
   TOOL (A): 09915–47341 (Oil filter wrench)

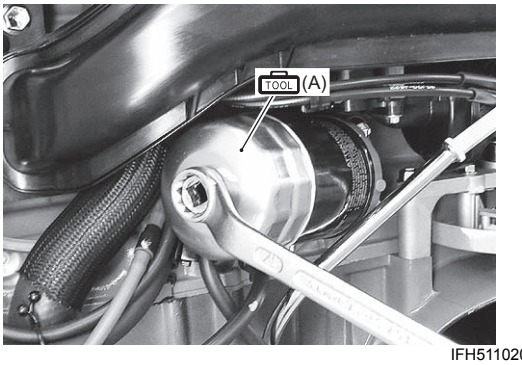

IFH511020003-01

NOTE

Before fitting a new oil filter, be sure to oil the O-ring.

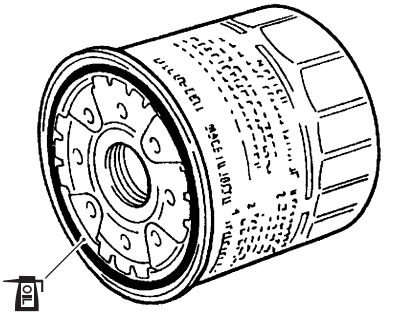

I9J011020004-01

5) Screw the new filter on by hand until filter O-ring contacts the mounting surface.
6) Tighten the filter 3/4 turn from the point of contact with mounting surface using the oil filter wrench.

   Tightening torque
   Engine oil filter (a): 14 N·m (1.4 kgf-m, 10.0 lbf-ft)

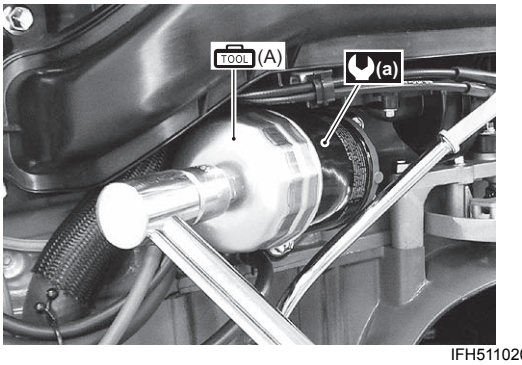

IFH511020004-01

7) Install STBD lower side cover.
   Refer to “Lower Side Cover Removal and Installation” in Section 2A (Page 2A-3).
8) Pour the recommended engine oil into the oil filler opening, then install oil filler cap. Check the oil level in the same manner of engine oil change procedure.

   Recommended engine oil
   - **4 stroke motor oil**
   - **NMMA certified FC-W oil.**
     or API classification:
     SG, SH, SJ, SL, SM.
   - **Viscosity rating:**
     SAE 10W-40 or 10W-30,
     NMMA FC-W 10W-40 or 10W-30

   Engine oil amounts
   Oil change only: 8.0 L (8.5/7.0 US/Imp.qt)
   Oil filter change: 8.5 L (9.0/7.5 US/Imp.qt)

9) Reset oil change reminder system’s operation time to zero (cancellation).

   NOTE

   Refer to “Oil Change Reminder System Description” in Section 1A (Page 1A-14).

10) Start engine and allow it to run for several minutes at idle speed.
    Check oil filter for oil leakage.
    Turn off engine and wait for approx. two minutes, then recheck engine oil level.

Gear Oil Change

CENFH5110206003

Change gear oil

Initially after 20 hours (1 month) and every 100 hours (12 months)

1) Place outboard motor upright on a level surface.
2) Place a container under the lower unit.
3) Remove lower gear oil drain plug (1) first, then remove air vent plug (2) and drain gear oil.

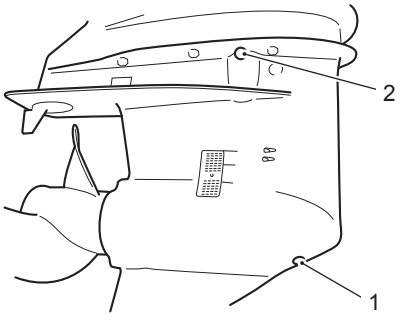

IEH511020010-01

4) Fill with recommended gear oil through oil drain hole until oil just starts to flow out from air vent hole.

Recommended gear oil

- **Suzuki Outboard Motor Gear Oil or API classification GL5, Viscosity rating SAE # 90 Hypoid gear oil.**

Gear oil amount

1 100 ml (37.2/38.7 US/Imp. oz)

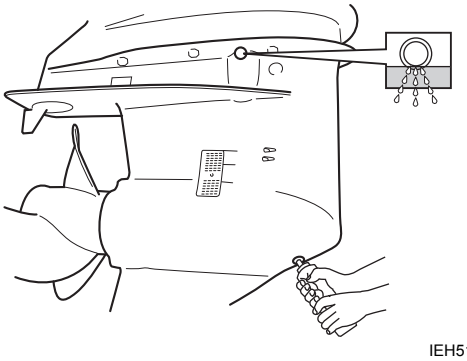

IEH511020011-01

5) Install air vent plug before removing oil filler tube from drain hole.
6) Install oil drain plug.

NOTICE

An used gasket may leak and allow water to enter the gearcase causing severe damage.

Do not reuse gaskets once removed.
Always use new gaskets.

NOTE

To avoid a possible low gear oil level, recheck gear oil level 10 minutes after doing procedure in step 6. If oil level is low, add additional gear oil until level is correct.

7) To check the gear oil level:
   a) Remove the oil level plug (3).
   b) If oil can be seen at oil level plug level, the unit is full.
   c) If oil level is low, re-fill with gear oil through oil level hole.
   d) Install oil level plug.

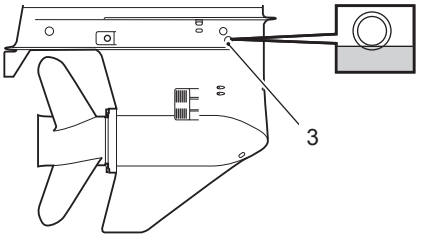

IEH511020012-01

Spark Plug Removal and Installation

CENFH5110206004

Inspect spark plug
Every 100 hours (12 months)

Standard spark plug
NGK LKR6E

NOTICE

Non-resistor types of spark plugs will interfere with the function of the electronic ignition, causing misfiring, or causing problems with other electronic boat equipment and accessories.

Only resistor (R) type spark plugs must be used with this engine.

Removal

⚠ WARNING

The hot engine can burn you.

Wait until the engine is cool enough to touch.

1) Disconnect the ignition coil connectors (1). Remove the bolts and ignition coils (2).

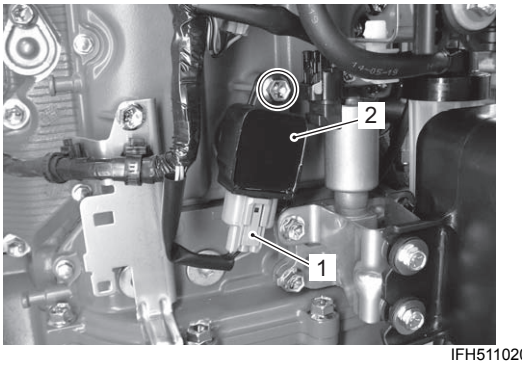

IFH511020005-01

2) Remove the spark plugs (3) with spark plug wrench.

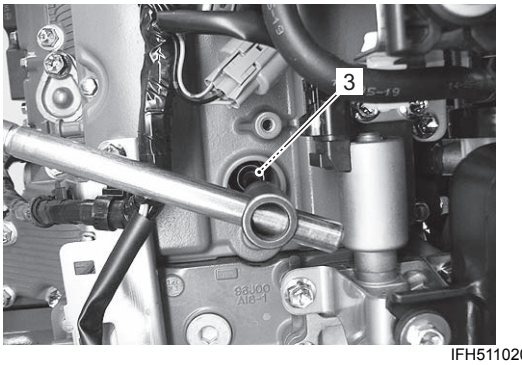

IFH511020006-01

Installation
Installation is reverse order of removal.
Pay attention to the following:

- Tighten the spark plug to specified torque.

Tightening torque
Spark plug (a): 17 N·m (1.7 kgf-m, 12.3 lbf-ft)

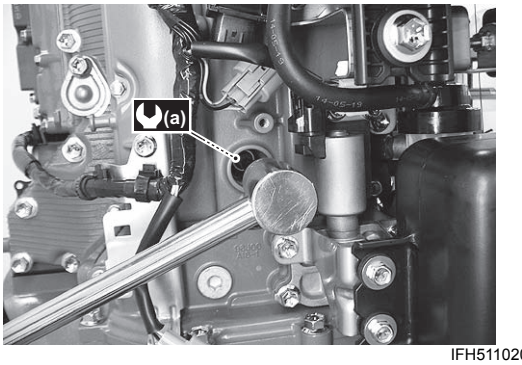

IFH511020007-01

Spark Plug Inspection and Cleaning

CENFH5110206005

NOTICE

Non-resistor types of spark plugs will interfere with the function of the electronic ignition, causing misfiring, or causing problems with other electronic boat equipment and accessories.

Only resistor (R) type spark plugs must be used with this engine.

Inspect spark plug
Every 100 hours (12 months)

Standard spark plug
NGK LKR6E

Carbon Deposits
Inspect for carbon deposits on spark plug base.
If carbon is present, remove it with a spark plug cleaning machine or by carefully using a pointed tool.

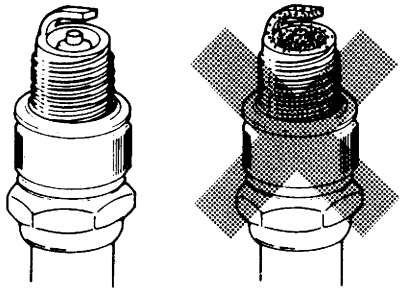

I9J011020005-01

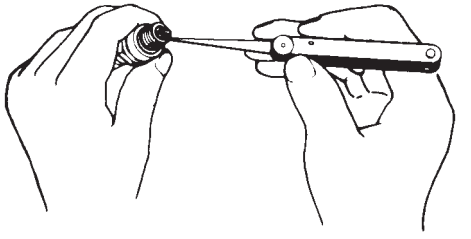

IDG211020060-01

Spark Plug Gap
Measure spark plug gap with a thickness gauge. Adjust to within specified range if gap is out of specification.

Special tool
TOOL : 09900–20803 (Thickness gauge)

Spark plug gap “a” (Standard)
0.8 – 0.9 mm (0.031 – 0.035 in.)

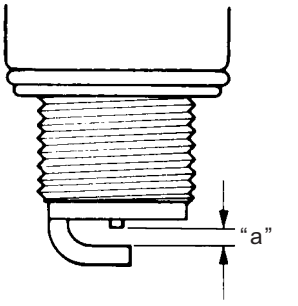

I9J011020007-01

Condition of Electrodes
Inspect electrode for a worn or burnt condition.
If it is extremely worn or burnt, replace spark plug.
Also, be sure to replace spark plug if it has a broken insulator, damaged thread, etc.

NOTICE

Use of improper spark plugs can cause severe engine damage.
If the reach is too short, carbon will be deposited on the threaded portion of the plug hole resulting in possible engine damage.

Confirm the thread size and reach when replacing the plug.

Tappet Clearance Inspection and Adjustment

CENFH5110206006

Inspect tappet clearance
Every 300 hours (36 months)

Inspection

The tappet clearance specification is different for intake and exhaust valves.
Too small a tappet clearance may reduce engine power, too large a tappet clearance increases valve noise and hastens valve and seat wear.
When the tappets are set to the specified clearance, the engine will run without excessive noise from the valve mechanism and will deliver full power. In this engine, the tappet clearance is increased or decreased by replacing the shim disc, made of a special wear resistant material, fitted to the top of the tappet. Using the proper tools provides for easy removal and installation of the shim disc.
Tappet clearance adjustment should be checked and adjusted:

- During scheduled periodic inspection.
- When valve mechanism is serviced.
- When camshafts are disturbed by removing them for inspection.

1) Remove the lower side covers.
   Refer to “Lower Side Cover Removal and Installation” in Section 2A (Page 2A-3).
2) Remove the ring gear cover and air intake silencer case (1).
   Refer to “Air Intake Silencer Case Removal and Installation” in Section 1D (Page 1D-2).

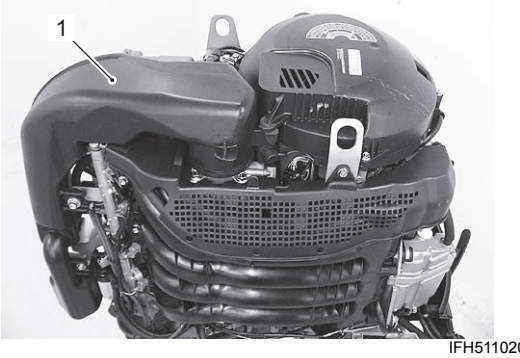

IFH511020008-01

3) Remove all spark plugs.
   Refer to “Spark Plug Removal and Installation” (Page 0B-7).
4) Remove the cylinder head cover (2).
   Refer to “Cylinder Head Cover Removal and Installation” in Section 1D (Page 1D-17).

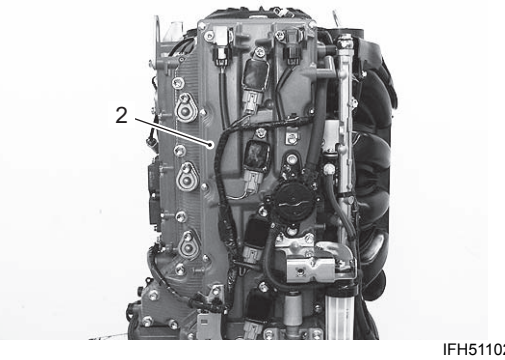

IFH511020009-01

5) Rotate crankshaft counterclockwise to bring cam nose vertical to shim surface.

NOTE

This is a left hand (LH) rotation powerhead.

NOTICE

Turning of the engine in clockwise can cause water pump impeller damage.

Rotate the crankshaft in the normal running direction only (counterclockwise) to prevent water pump impeller damage.

6) Measure tappet clearances by inserting thickness gauge between cam and shim surface.

NOTE

- **Rotate crankshaft and measure clearance for each tappet respectively by bringing cam nose vertical to shim surface.**
- **All tappet clearances can be measured during two crankshaft rotations.**

Special tool
TOOL (A): 09900–20803 (Thickness gauge)

Tappet clearance (Cold engine condition)
IN.: 0.23 – 0.27 mm (0.009 – 0.011 in.)
EX.: 0.30 – 0.34 mm (0.012 – 0.013 in.)

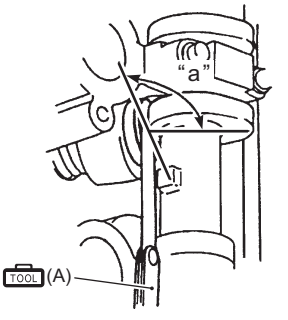

I9J011020008-01

“a”: 90°

7) If out of specification, adjust tappet clearance by changing shim.

Adjustment

Tappet clearances are adjusted by replacing tappet shim.

1) With cam nose vertical to valve, turn tappet cut-away towards center of cylinder head as shown in figure.

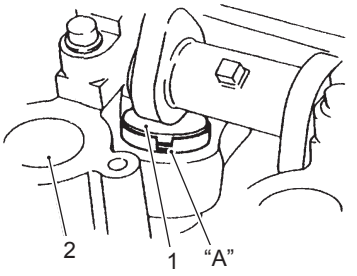

IEH511020019-01

1. Shim	"A": Cut section of the tappet
2. Spark plug hole	

2) Rotate crankshaft to open (lift up) valve and then remove camshaft housing bolts where shim is to be replaced.

3) Install special tool with camshaft housing bolts as shown in figure.

Special tool

TOOL (A): 09916–69310 (Tappet holder)

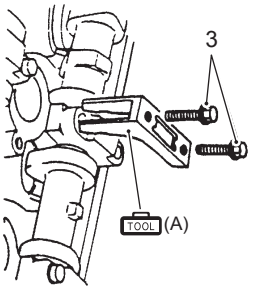

IEH511020020-01

3. Camshaft housing bolt

⚠ WARNING

Failure to take proper precautions when installing or removing the tappet shim can result in severe personal injury.

When installing or removing the tappet shim:

- **Never put in the hand between camshaft and tappet.**
- **Use a magnet to remove and install shim.**

4) Rotate top of cam 90 degree clockwise and remove shim from cut-away at tappet.
(Two tappets can be adjusted at the same time)

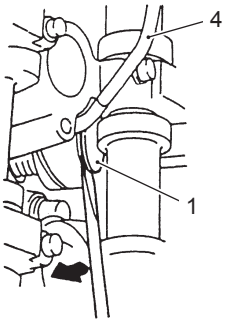

IEH511020021-01

1. Shim	4. Magnet

NOTE

When installing shim, identification mark on the shim should face down (towards tappet).

5) After removing shim, measure thickness of original shim and determine correct thickness of shim for proper tappet clearance as calculated by following formula.

Special tool

TOOL (B): 09900–20205 (Micrometer (0 – 25 mm))

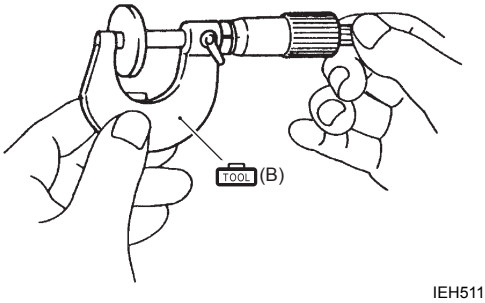

IEH511020022-01

Tappet clearance specifications

IN. side: A = B + (C – 0.25 mm)
EX. side: A = B + (C – 0.32 mm)
A: Correct thickness of shim for proper tappet clearance (mm)
B: Thickness of original shim (mm)
C: Original tappet clearance (mm)

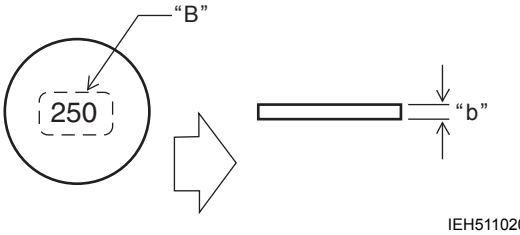

IEH511020023-01

"B": I.D No.	"b": 2.50 mm

Shim size chart

I.D. No.	Thickness (mm)	I.D. No.	Thickness (mm)
218	2.18	260	2.60
220	2.20	263	2.63
223	2.23	265	2.65
225	2.25	268	2.68
228	2.28	270	2.70
230	2.30	273	2.73
233	2.33	275	2.75
235	2.35	278	2.78
238	2.38	280	2.80
240	2.40	283	2.83
243	2.43	285	2.85
245	2.45	288	2.88
248	2.48	290	2.90
250	2.50	293	2.93
253	2.53	295	2.95
255	2.55	298	2.98
258	2.58	300	3.00

6) Install shim with the identification number facing down (towards tappet).
7) Rotate crankshaft clockwise to open (lift up) valve.

NOTE

This step only;
Rotate the crankshaft clockwise, otherwise the valves may contact with the piston head.

8) Remove special tool and tighten camshaft housing bolts (a) to specified torque.

Tightening torque
Camshaft housing bolt (a): 12 N·m (1.2 kgf-m, 8.5 lbf-ft)

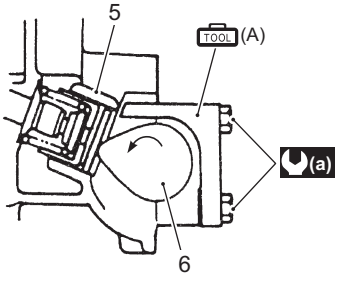

IFH511020028-03

5. Tappet	6. Camshaft

9) Recheck tappet clearance.

NOTE

After completing tappet clearance adjustment and securing camshaft housing bolts, inspect tappet clearance again.

10) After checking and adjusting all valves, reinstall parts removed earlier.
Installation is reverse order of removal.
a) Cylinder Head Cover.
- Install the cylinder head cover.
Refer to “Cylinder Head Cover Removal and Installation” in Section 1D (Page 1D-17).

NOTE

Examine cylinder head cover gasket (7) for damage. Always replace gasket if sealing performance is suspect.

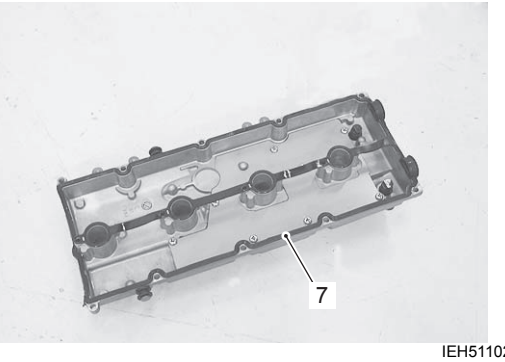

IEH511020025-01

b) OCV
- Install OCV.
Refer to “OCV (Oil Control Valve) Removal and Installation” in Section 1D (Page 1D-19).

NOTICE

An used gasket may leak, resulting in engine damage.

Do not reuse gasket once removed.
Always use a new gasket.

c) Final assembly check
- All parts removed have been returned to their original positions.
- Check hose and wire routing.
Refer to “Wiring Harness Routing Diagram” in Section 4A (Page 4A-2).
- Check oil leakage.

TAPPET SHIM SELECTION CHART [IN. side]

Shim I.D. No. / Present shim size (mm) / Tappet clearance (mm)	218	220	223	225	228	230	233	235	238	240	243	245	248	250	253	255	258	260	263	265	268	270	273	275	278	280	283	285	288	290	293	295	298	300
	2.18	2.20	2.23	2.25	2.28	2.30	2.33	2.35	2.38	2.40	2.43	2.45	2.48	2.50	2.53	2.55	2.58	2.60	2.63	2.65	2.68	2.70	2.73	2.75	2.78	2.80	2.83	2.85	2.88	2.90	2.93	2.95	2.98	3.00
0.00 – 0.04											220	223	225	228	230	233	235	238	240	243	245	248	250	253	255	258	260	263	265	268	270	273	275	278
0.05 – 0.09									220	223	225	228	230	233	235	238	240	243	245	248	250	253	255	258	260	263	265	268	270	273	275	278	280	283
0.10 – 0.14							220	223	225	228	230	233	235	238	240	243	245	248	250	253	255	258	260	263	265	268	270	273	275	278	280	283	285	288
0.15 – 0.19					220	223	225	228	230	233	235	238	240	243	245	248	250	253	255	258	260	263	265	268	270	273	275	278	280	283	285	288	290	293
0.20 – 0.22			220	223	225	225	228	230	233	235	240	240	245	245	250	250	255	255	260	260	263	265	270	270	273	278	280	280	283	285	290	290	293	295
0.23 – 0.27	SPECIFIED CLEARANCE / NO. ADJUSTMENT REQUIRED																																	
0.28 – 0.32	223	225	228	230	233	235	238	240	243	245	248	250	253	255	258	260	263	265	268	270	273	275	278	280	283	285	288	290	293	295	298	300		
0.33 – 0.37	228	230	233	235	238	240	243	245	248	250	253	255	258	260	263	265	268	270	273	275	278	280	283	285	288	290	293	295	298	300				
0.38 – 0.42	233	235	238	240	243	245	248	250	253	255	258	260	263	265	268	270	273	275	278	280	283	285	288	290	293	295	298	300						
0.43 – 0.47	238	240	243	245	248	250	253	255	258	260	263	265	268	270	273	275	278	280	283	285	288	290	293	295	298	300								
0.48 – 0.52	243	245	248	250	253	255	258	260	263	265	268	270	273	275	278	280	283	285	288	290	293	295	298	300										
0.53 – 0.57	248	250	253	255	258	260	263	265	268	270	273	275	278	280	283	285	288	290	293	295	298	300												
0.58 – 0.62	253	255	258	260	263	265	268	270	273	275	278	280	283	285	288	290	293	295	298	300														
0.63 – 0.67	258	260	263	265	268	270	273	275	278	280	283	285	288	290	293	295	298	300																
0.68 – 0.72	263	265	268	270	273	275	278	280	283	285	288	290	293	295	298	300																		
0.73 – 0.77	268	270	273	275	278	280	283	285	288	290	293	295	298	300																				
0.78 – 0.82	273	275	278	280	283	285	288	290	293	295	298	300																						
0.83 – 0.87	278	280	283	285	288	290	293	295	298	300																								
0.88 – 0.92	283	285	288	290	293	295	298	300																										

1. Measure tappet clearance “Engine cold”.
2. Measure present shim size.
3. Match clearance in vertical column with present shim size in horizontal column.

[EXAMPLE]
Tappet clearance is — 0.35 mm
Present shim size — 2.40 mm
Shim size to be used — 2.50 mm

IEH51102026-01

TAPPET SHIM SELECTION CHART [EX. side]

Tappet clearance (mm) \ Present shim size (mm) / Shim ID No.	218	220	223	225	228	230	233	235	238	240	243	245	248	250	253	255	258	260	263	265	268	270	273	275	278	280	283	285	288	290	293	295	298	300
	2.18	2.20	2.23	2.25	2.28	2.30	2.33	2.35	2.38	2.40	2.43	2.45	2.48	2.50	2.53	2.55	2.58	2.60	2.63	2.65	2.68	2.70	2.73	2.75	2.78	2.80	2.83	2.85	2.88	2.90	2.93	2.95	2.98	3.00
0.00 – 0.04													218	220	223	225	228	230	233	235	238	240	243	245	248	250	253	255	258	260	263	265	268	270
0.05 – 0.09											218	220	223	225	228	230	233	235	238	240	243	245	248	250	253	255	258	260	263	265	268	270	273	275
0.10 – 0.14									218	220	223	225	228	230	233	235	238	240	243	245	248	250	253	255	258	260	263	265	268	270	273	275	278	280
0.15 – 0.19							218	220	223	225	228	230	233	235	238	240	243	245	248	250	253	255	258	260	263	265	268	270	273	275	278	280	283	285
0.20 – 0.24					218	220	223	225	228	230	233	235	238	240	243	245	248	250	253	255	258	260	263	265	268	270	273	275	278	280	283	285	288	290
0.25 – 0.29			218	220	223	225	228	230	233	235	238	240	243	245	248	250	253	255	258	260	263	265	268	270	273	275	278	280	283	285	288	290	293	295
0.30 – 0.34	SPECIFIED CLEARANCE / NO. ADJUSTMENT REQUIRED																																	
0.35 – 0.39	223	225	228	230	233	235	238	240	243	245	248	250	253	255	258	260	263	265	268	270	273	275	278	280	283	285	288	290	293	295	298	300		
0.40 – 0.44	228	230	233	235	238	240	243	245	248	250	253	255	258	260	263	265	268	270	273	275	278	280	283	285	288	290	293	295	298	300				
0.45 – 0.49	233	235	238	240	243	245	248	250	253	255	258	260	263	265	268	270	273	275	278	280	283	285	288	290	293	295	298	300						
0.50 – 0.54	238	240	243	245	248	250	253	255	258	260	263	265	268	270	273	275	278	280	283	285	288	290	293	295	298	300								
0.55 – 0.59	243	245	248	250	253	255	258	260	263	265	268	270	273	275	278	280	283	285	288	290	293	295	298	300										
0.60 – 0.64	248	250	253	255	258	260	263	265	268	270	273	275	278	280	283	285	288	290	293	295	298	300												
0.65 – 0.69	253	255	258	260	263	265	268	270	273	275	278	280	283	285	288	290	293	295	298	300														
0.70 – 0.74	258	260	263	265	268	270	273	275	278	280	283	285	288	290	293	295	298	300																
0.75 – 0.79	263	265	268	270	273	275	278	280	283	285	288	290	293	295	298	300																		
0.80 – 0.84	268	270	273	275	278	280	283	285	288	290	293	295	298	300																				
0.85 – 0.89	273	275	278	280	283	285	288	290	293	295	298	300																						
0.90 – 0.94	278	280	283	285	288	290	293	295	298	300																								

1. Measure tappet clearance “Engine cold”.
2. Measure present shim size.
3. Match clearance in vertical column with present shim size in horizontal column.

[EXAMPLE]
Tappet clearance is — 0.40 mm
Present shim size — 2.40 mm
Shim size to be used — 2.50 mm

IEH511020027-01

Idle Speed and Idle Air Control (IAC) Duty Inspection

CENFH5110206007

Inspect idle speed and IAC duty

Initially after 20 hours (1 month) and every 200 hours (12 months)

NOTE

Before checking idle speed/IAC duty, make sure of the following.

- **Engine must be warmed up.**
- **Check idle speed after engine speed has stabilized.**
- **Check throttle link mechanism and throttle valve for smooth operation.**
- **Lead wires and hoses of electronic fuel injection and engine control systems are connected securely.**
- **Ignition timing is within specification.**
- **Tappet clearance is checked according to maintenance schedule.**
- **No abnormal air drawn in from air intake system.**

After all items are confirmed, check idle speed and IAC duty.

There are two methods available for performing the idle speed / IAC duty inspection and adjustment;

1) Using a personal computer and the SDS (Suzuki Diagnostic System) software.
   Suzuki recommends using this method as it is possible to monitor the inspection data.

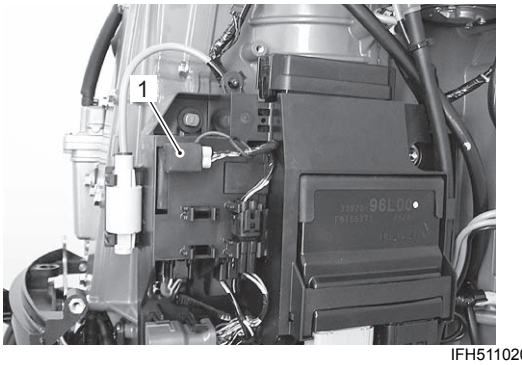

IFH511020010-01

1. SDS service connector

2) Adjust engine speed by the IAC duty fixed mode.
   In IAC duty fixed mode, engine speed can be adjusted while monitoring engine speed by tachometer.

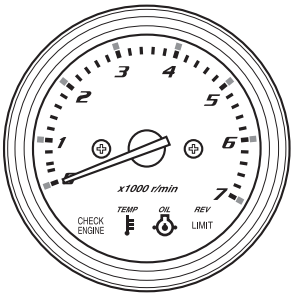

I9J011020033-01

SDS tool is used

To perform the idle speed and IAC duty inspection, use personal computer and the SDS tool.

1) Connect the SDS tool to engine.
   Refer to the step 1 on the SDS operation manual.
2) Start the engine and allow to warm up.
3) Check the engine speed and IAC duty by using "Service data/Engine data" mode in the SDS.

   Idle speed in neutral gear (IAC duty)
   Standard: 600 – 700 r/min (Duty: Approx. 15%)

   NOTE

   During the period of idling or trolling, the IAC duty is approx. 15%, however it varies by the load, the climate, water condition etc. to keep the engine speed at preset value.

4) If engine idle speed/IAC duty is out of the specification, the following adjustment must be performed.

   NOTE

   To access the by-pass air screw, there is the access hole on the fuel hose guard as shown in the figure below.

a) Turn the by-pass air screw in an appropriate direction to bring it to the standard specification.

NOTE

Idling/trolling speed is controlled by the IAC system.
Do not attempt to adjust the throttle valve opening by turning the throttle stop screw.

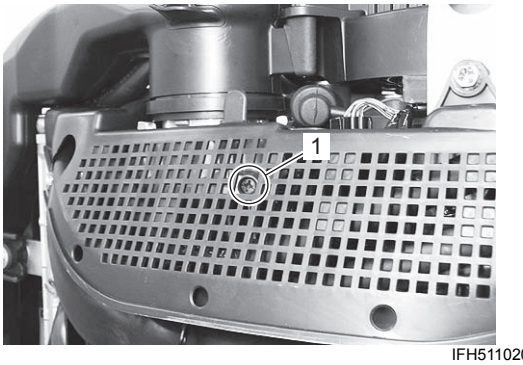

IFH511020011-01

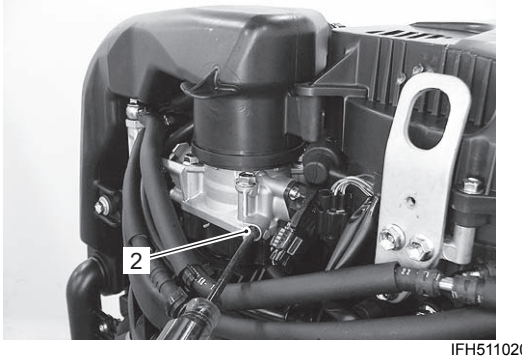

IFH511020012-02

1. Access hole	2. By-pass air screw

b) Shift into forward, check in-gear idle speed.

NOTE

- **The IAC duty at the trolling speed will be increased more than that at idle speed due to the load.**
- **Trolling speed (in-gear idle speed) is the same as engine idle speed.**
- **Idling/trolling speed of 600 – 700 r/min. is controlled by the IAC system.**
  If engine speed can not be controlled to the specification, IAC passage may be clogged or IAC system may not operate correctly.
  See "Idle Air Control System Description" in Section 1G (Page 1G-10).

<u>Idle speed in gear (IAC duty)</u>
600 – 700 r/min (Duty: Approx. 10 – 40%)

Adjust engine speed by the IAC duty fixed mode
Checking and adjustment of idle speed / IAC duty by IAC duty fixed mode are as follows;

1) Start engine and allow to warm up.

NOTE

To access the by-pass air screw, there is the access hole on the fuel hose guard as shown in the figure below.

2) Shift into Neutral and close the throttle fully (this will cause a full close throttle signal to be input to the ECM).
3) To set the IAC valve duty to constant 13.8%, turn the ignition key from ON to START five times within ten seconds.
   At this time, the caution buzzer will sound to notify that IAC duty is in fixed mode.

NOTE

While IAC duty is at a fixed 13.8% duty, the "Check Engine" lamp will flash.
This function is added to "caution buzzer sound".

NOTE

- **The ignition key operation to set the IAC valve into the fixed mode should be performed with the engine running at idle.**
- **While IAC valve duty is at a fixed 13.8% duty, the caution buzzer will sound in a repeating pattern of 0.5 second on with an interval of 3 seconds off.**
- **The 13.8% fixed mode of IAC valve duty will continue for 5 minutes after which it will automatically cancel.**

4) During this fixed mode of IAC valve duty, adjust engine speed to 650 ± 50 r/min. by turning by-pass air screw.
Turning air screw counterclockwise:
Engine speed will increase.
Turning air screw clockwise:
Engine speed will decrease.

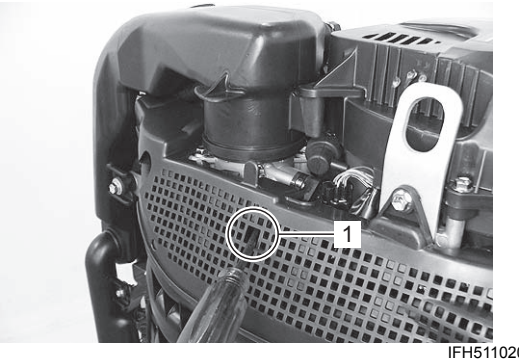

IFH511020013-02

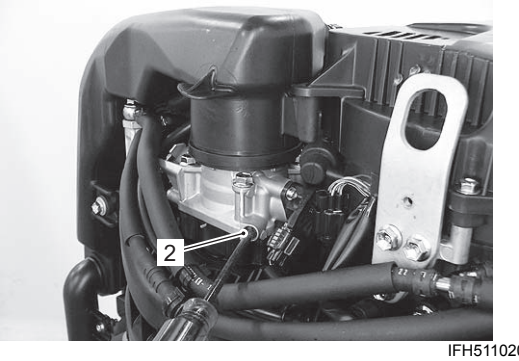

IFH511020014-02

1. Access hole	2. By-pass air screw

5) When finished adjusting the idle speed, opening the throttle will automatically cancel the IAC fixed mode.

NOTE

The fixed mode of IAC can also be canceled manually by shifting to Forward or Reverse or raising the engine speed (changes the TPS full close throttle signal to OFF).

6) Return the throttle to full close and check engine speed.
It should now be stable at 600 – 700 r/min.

NOTE

Idling/trolling speed of 600 – 700 r/min. is controlled by IAC (idle air control) system. If engine speed does not return to specification, IAC passage may be clogged or IAC system may not be operating correctly. See "Idle Air Control System Description" in Section 1G (Page 1G-10).

NOTE

Trolling speed (in-gear idle speed) is same as idle speed.

Ignition Timing Inspection

CENFH5110206008

Inspect ignition timing
Every 200 hours (12 months)

NOTE

Before checking the ignition timing, make sure idle speed is adjusted within specification.

1) Start the engine and allow to warm up.
2) Attach the timing light cord to the No.1 ignition coil primary wire.

Special tool
TOOL (A): 09930–76310 (Timing light)

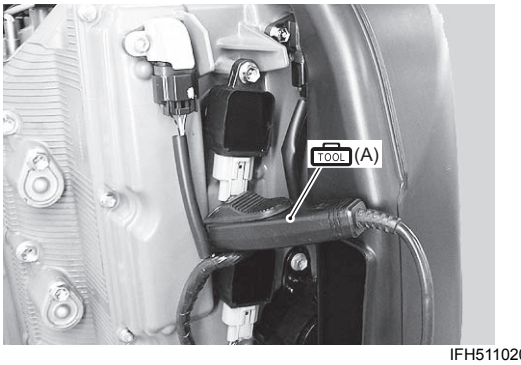

IFH511020015-01

3) Check the ignition timing while operating the engine in neutral gear at 1 000 r/min.

Ignition timing
Approx. 4° BTDC at 1 000 r/min



IFH511020016-01

Breather Line and Fuel Line Inspection

CENFH5110206009

Inspect breather line and fuel line
Initially after 20 hours (1 month) and every 100 hours (12 months)

If leakage, cracks, swelling or other damage is found, replace the breather hose and/or fuel line.

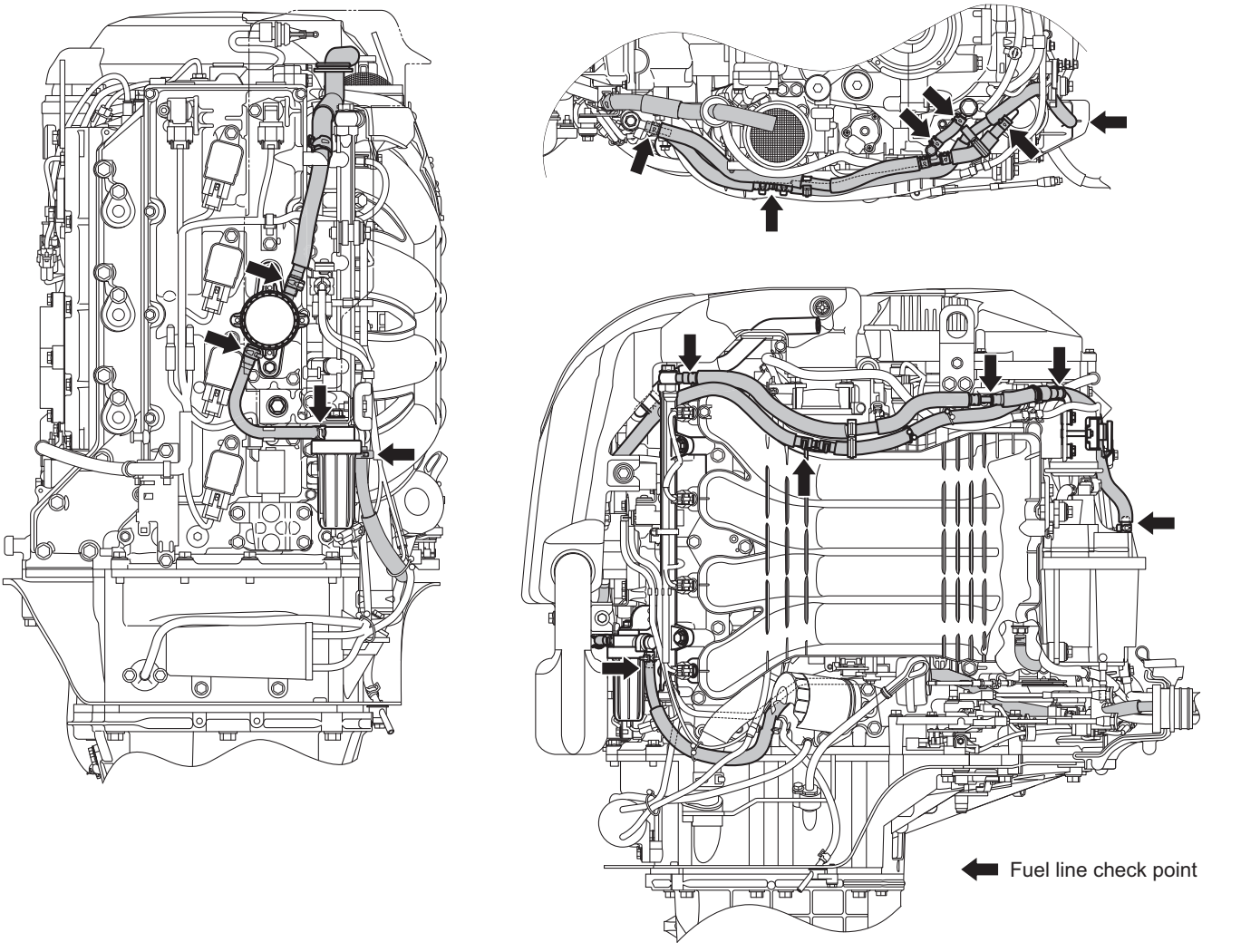

IFH511020017-02

Low Pressure Fuel Filter Inspection

CENFH5110206010

Inspect low pressure fuel filter
Initially after 20 hours (1 month) and every 100 hours (12 months)

Replace low pressure fuel filter
Every 400 hours or 2 years

If water accumulation, sediment, leakage, cracks or other damage is found, replace the low pressure fuel filter.

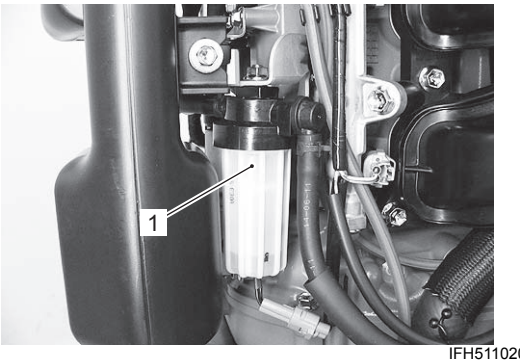

IFH511020018-02

1. Low pressure fuel filter

⚠ WARNING

Gasoline is extremely flammable and toxic. It can cause a fire and can be hazardous to people and pets.

Always take the following precautions when servicing the fuel filter

- **Stop the motor before cleaning the low pressure fuel filter.**
- **Be careful not to spill fuel. If you do, wipe it up immediately.**
- **Do not smoke, and keep away from open flames and sparks.**

1) Turn the engine off and allow it to cool.
   Make sure that the ignition key is in the OFF position.
2) Remove STBD lower side cover.
   Refer to “Lower Side Cover Removal and Installation” in Section 2A (Page 2A-3).
3) Remove the bolts securing resonator (1), then remove the resonator.

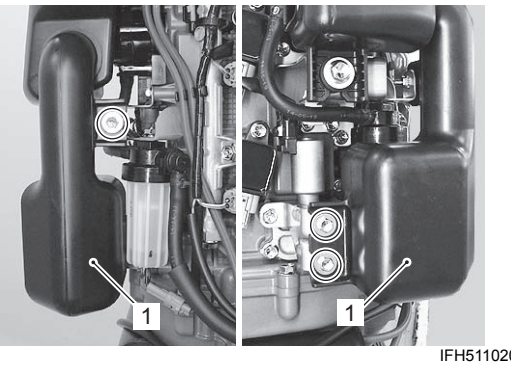

IFH511020019-02

4) Remove the nut (2) securing the low pressure fuel filter to filter bracket.

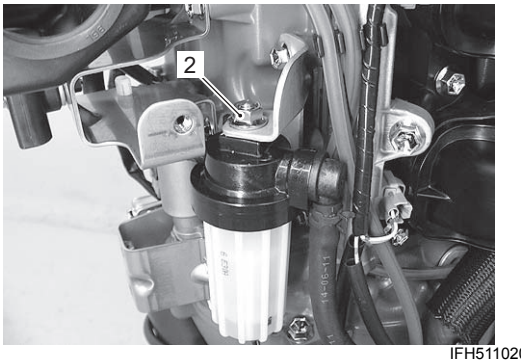

IFH511020020-02

NOTICE

Improperly loosening the filter cup can cause switch lead wires damage.

- **Be careful not to twist the switch lead wire when removing the filter cup.**
- **Disconnect the lead wire connector before removing the filter cup.**

5) Push the connector lock tab “A”, then disconnect the switch lead wire connector (3).

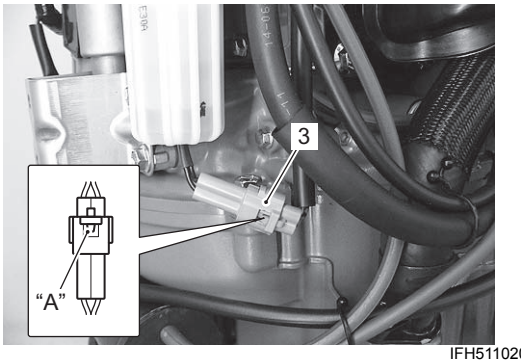

IFH511020021-02

6) Place a rag under the filter before removal to catch any spilled fuel.
7) Separate the fuel filter cup (4) from the fuel filter body (5) by turning the fuel filter cup counterclockwise.

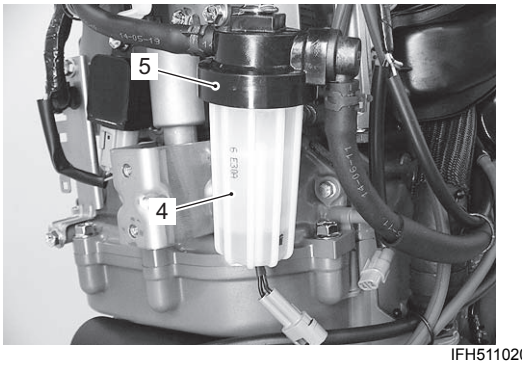

IFH511020022-02

8) Drain fuel and water in the fuel filter cup (4) into a suitable container.
9) Pull out the filter element (6).
10) Inspect the filter element (6), O-ring (7) and seal ring (8) for damage.
If they are damaged, replace them.

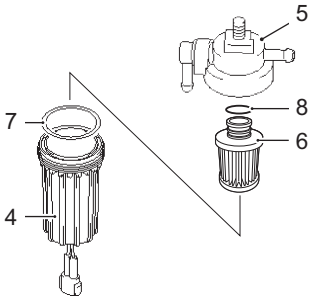

IFH511020027-01

11) Wash the filter element (6) with clean solvent and dry it.
12) Assemble the seal ring (8) and filter element (6) in their original positions.
13) Verify that the O-ring (7) is in place in the top of the filter cup (4) and screw the filter cup back into place.
14) Connect the switch lead wire connector (3).
15) Reinstall the fuel filter and resonator.
16) Restart the engine and check that there are no leaks around the fuel filter.

High Pressure Fuel Filter Replacement

CENFH5110206011

Replace high pressure fuel filter
Every 1 000 hours

SUZUKI recommends that replacing the high pressure fuel filter every 1 000 operating hours.
For high pressure fuel filter replacement procedure, refer to “High Pressure Fuel Filter Removal and Installation” in Section 1G (Page 1G-30).

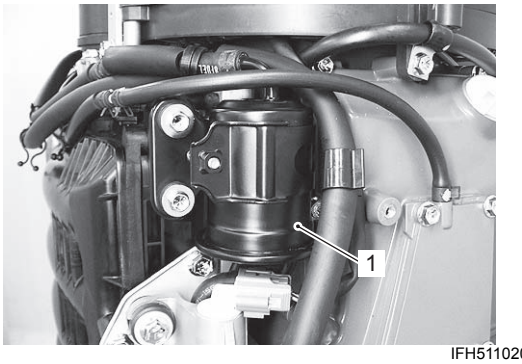

IFH511020023-01

1. High pressure fuel filter

Water Pump and Water Pump Impeller Inspection

CENFH5110206012

Inspect water pump/pump impeller
Every 200 hours (12 months)

Replace water pump impeller
Every 300 hours (36 months)

1) Remove the lower unit and water pump case.
Refer to “Water Pump Removal and Installation” in Section 3A (Page 3A-7).
2) Inspect water pump case, inner sleeve and under panel. Replace if wear, cracks, distortion or corrosion is found.
3) Inspect water pump impeller.
Replace if vanes are cut, torn or worn.
SUZUKI recommends that replacing the water pump impeller every 300 hours (36 months).

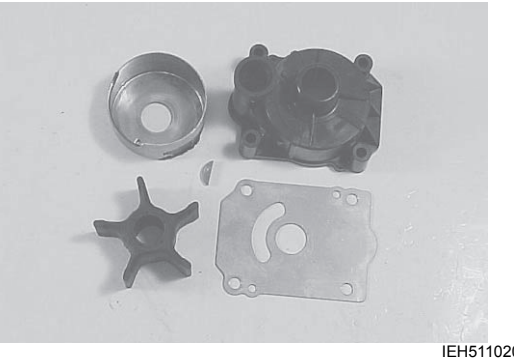

IEH511020034-01

4) Assemble the water pump related items.
   Refer to “Water Pump Removal and Installation” in Section 3A (Page 3A-7).
5) Install the lower unit assembly.
   Refer to “Lower Unit Removal and Installation” in Section 3A (Page 3A-6).

Propeller / Propeller Nut and Cotter Pin Inspection

CENFH5110206013

Inspect propeller/propeller nut and cotter pin
Initially after 20 hours (1 month) and every 100 hours (12 months).

1) Inspect propeller for bent, chipped or broken blades. Replace propeller if damage noticeably affects operation.
2) Remove the propeller.
   Refer to “Propeller Removal and Installation” in Section 3A (Page 3A-5).
3) Inspect propeller splines. Replace propeller if splines are worn, damaged or twisted.
4) Inspect propeller bush for slippage.
   Replace if necessary.

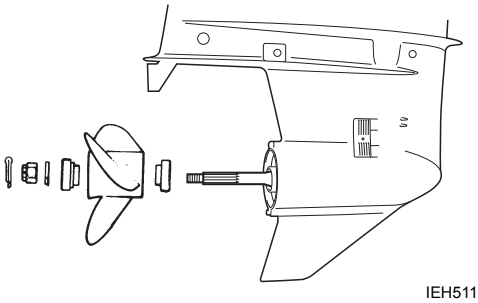

IEH511020035-01

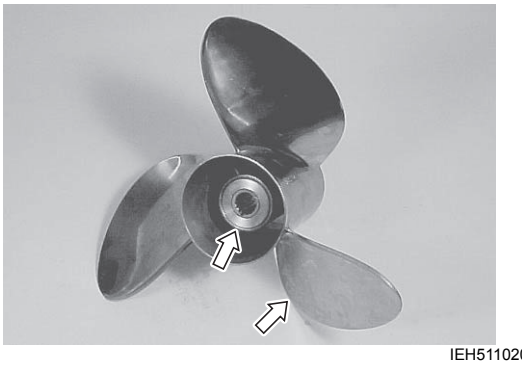

IEH511020057-01

5) Install the propeller and related parts.
   Refer to “Propeller Removal and Installation” in Section 3A (Page 3A-5).
6) Make sure that propeller nut is torqued to specification and cotter pin is installed securely.

   Tightening torque
   Propeller nut: 55 N·m (5.5 kgf-m, 40.0 lbf-ft)

Anode Inspection

CENFH5110206014

Inspect anodes (External)
Initially after 20 hours (1 month) and every 100 hours (12 months)

Inspect anodes (Internal powerhead)
Every 100 hours (12 months)

If 2/3 of zinc anode has corroded away, replace anode. The anode should be periodically cleaned with a wire brush to ensure maximum effectiveness.

NOTICE

If anodes are not properly maintained, underwater aluminum surfaces (such as the lower unit) will suffer galvanic corrosion damage.

- **Periodically inspect anodes to make sure they have not become detached.**
- **Do not paint anodes, as this will render them ineffective.**
- **Periodically clean anodes with a wire brush to remove any coating which might decrease their protective ability.**

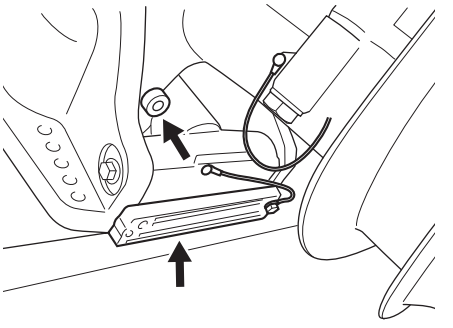

IEH511020036-01

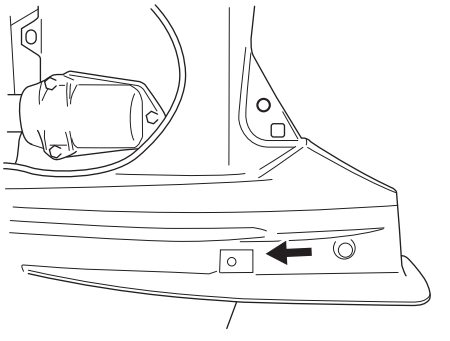

IEH511020037-01

NOTE

The anode cover (1) may be separated from the power unit body by inserting and turning a 10 mm bolt (2) to function as a screw jack.

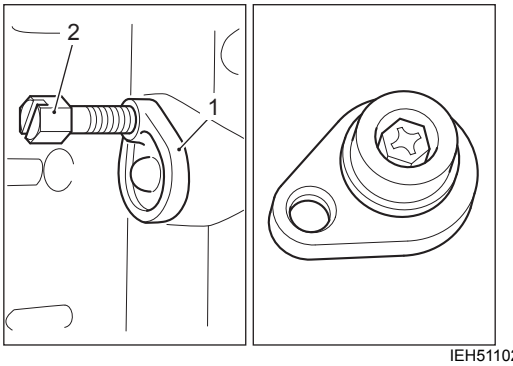

IEH511020038-01

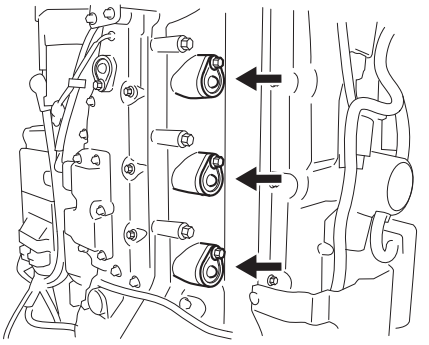

IEH511020039-01

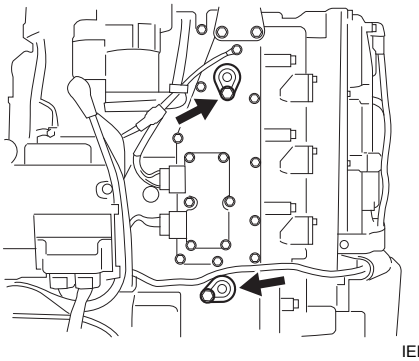

IEH511020040-01

NOTE

The anode securing bolt should be covered with suzuki silicone seal.

Si : Sealant 93691–80030 (SUZUKI Silicone Seal (100 g))

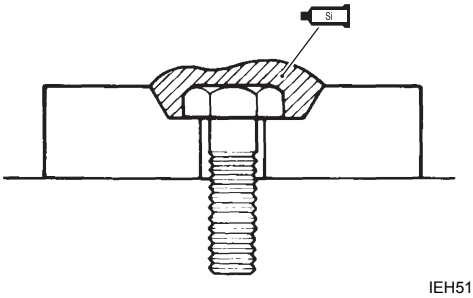

IEH511020041-01

Bonding Wire Inspection

CENFH5110206015

Inspect bonding wires
Initially after 20 hours (1 month) and every 100 hours (12 months)

If breakage or other damage is found on bonding wire, replace the wire.
If rust, corrosion or other damage is found on terminal, clean with cleaning solvent or replace the wire.

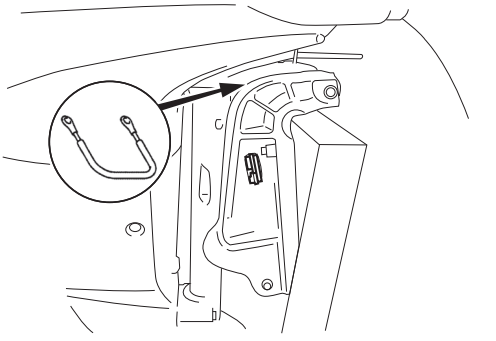

IEH511020042-01

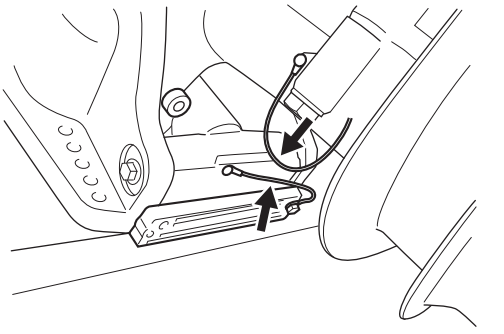

IEH511020043-01

Battery Inspection

CENFH5110206016

Inspect battery

Initially after 20 hours (1 month) and every 100 hours (12 months)

⚠ WARNING

Failure to take proper precautions when handling the battery may cause severe injury.

Be sure to take the following precautions when handling the battery:

- **Never expose the battery to open flames or electric sparks as batteries generate gas which is flammable and explosive.**
- **Do not place the battery near the fuel tank.**
- **Battery acid is poisonous and corrosive. Avoid contact with eyes, skin, clothing, and painted surfaces. If you come in contact with battery acid, flush immediately with large amounts of water and seek immediate medical attention.**
- **Batteries should always be kept out of reach of children.**
- **When checking or servicing battery, disconnect the negative (black) cable. Be careful not to cause a short circuit by allowing metal objects to contact the battery posts and motor at the same time.**
- **Wear approved eye protection.**

Recommended battery

12 V 100 AH (360 kC) or larger

Refer to “Battery Requirement” in Section 0A (Page 0A-5).

Connecting Battery

⚠ WARNING

Battery posts, terminals, and related accessories contain lead and lead compounds that may be hazardous.

Wash hands after handling.

NOTICE

Failure at the battery connection will cause incorrect operation of the engine control system.

Be sure to take the following precautions:

- **Ensure battery cable connections are clean and secure.**
- **Be sure to use hexagon nuts to secure battery cables to the battery terminals to avoid loss of electrical power. Do not use wing nuts to secure the battery cables.**
- **Check the nuts periodically for proper tightness.**
- **Do not disconnect battery leads from the battery while the engine is running.**

How to connect

1) Connect positive (+) terminal first.
2) Connect negative (–) terminal second.
3) Upon completion of connection, lightly apply grease to battery terminals.

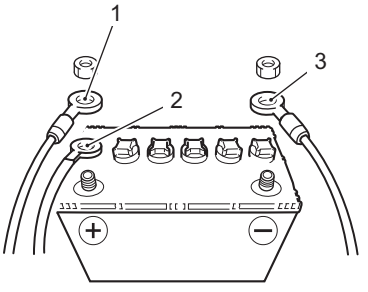

IFH511020002-01

1. Red lead	2. Sub battery cable	3. Black lead

How to disconnect

1) Disconnect negative (–) terminal first.
2) Disconnect positive (+) terminal second.

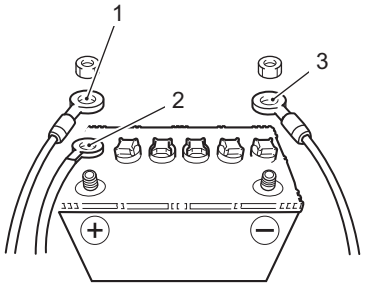

IFH511020024-01

1. Red lead	2. Sub battery cable	3. Black lead

Battery Solution Level Check

NOTICE

If you add diluted sulphuric acid to the battery after it has been initially serviced, you will damage the battery.

Never add diluted sulphuric acid to the battery after it has been initially serviced. Follow the battery manufacturer's instructions for specific maintenance procedures.

Battery solution level should be between UPPER level and LOWER level.
If level is low, add distilled water only.

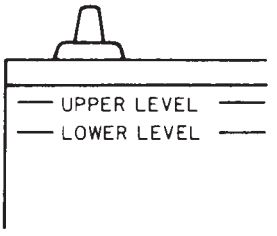

I9J011020031-01

Battery Solution Specific Gravity Check
Measure the specific gravity of battery solution using a hydrometer.

Battery solution specific gravity (Temperature)
1.28 (20 °C)

Special tool
TOOL : 09900–28403 (Hydrometer)

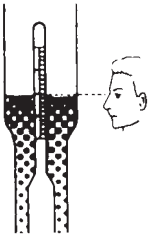

I9J011020032-01

Balancer Chain Replacement

CENFH5110206017

Replace balancer chain
Every 1 600 hours

SUZUKI recommends replacing the balancer chain, chain tensioner and chain guide every 1 600 hours.
For balancer chain replacement procedure, refer to "Timing Chain, Camshaft Sprocket, Balancer Chain Removal and Installation" in Section 1D (Page 1D-29).

Thermostat Inspection

CENFH5110206018

Inspect thermostat
Every 100 hours (12 months)

Inspect thermostat every 100 hours (12 months).
Refer to "Thermostat Removal and Installation" in Section 1F (Page 1F-3) and "Thermostat Inspection" in Section 1F (Page 1F-4).

Bolts and Nuts Inspection

CENFH5110206019

Inspect bolts and nuts
Initially after 20 hours (1 month) and every 100 hours (12 months)

Check that all bolts and nuts listed below are tightened to their specified torque.
Refer to "Tightening Torque Specifications" in Section 0A (Page 0A-14).

- Cylinder head cover bolts
- Intake manifold bolts and nuts
- Flywheel bolt
- Power unit mounting bolts
- Clamp bracket shaft nut
- Lower mount bolts
- Gearcase bolts
- Propeller nut

Oil Pressure Check

CENFH5110206020

⚠ CAUTION

Engine oil can be hot enough to burn you.

Do not remove the oil pressure gauge adapter when the engine is hot. Wait until engine cools.

Check the engine oil pressure periodically.

1) Check the engine oil level.
2) Remove STBD lower side cover.
   Refer to "Lower Side Cover Removal and Installation" in Section 2A (Page 2A-3).
3) Remove the plug (1) for oil pressure service port.

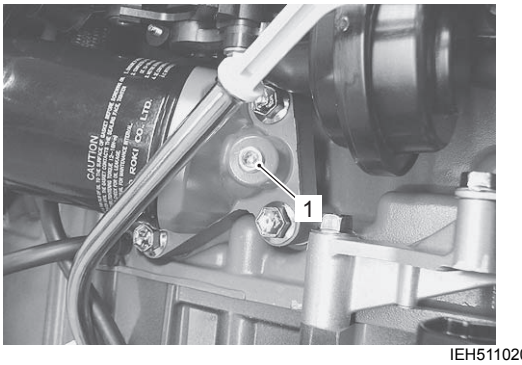

IEH511020045-02

4) Install oil pressure gauge in place of service port.

Special tool
TOOL (A): 09915–77311 (Oil pressure gauge)
TOOL (B): 09915–78211 (Oil pressure gauge adapter)

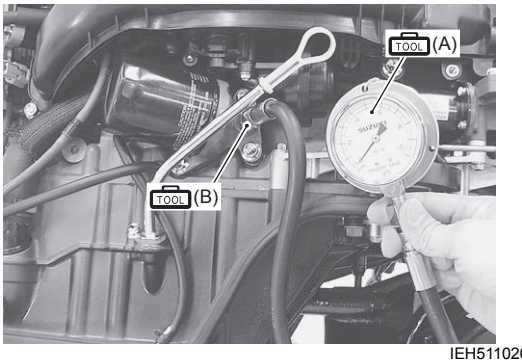

IEH511020046-02

5) Start engine and allow to warm up.

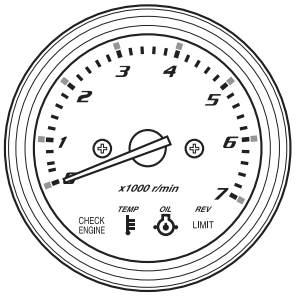

I9J011020033-01

6) After warming up, shift into forward gear and increase engine speed to 3 000 r/min., then compare pressure indicated on gauge to specifications.

NOTE

The figure shown below is a guideline only, not an absolute service limit.

Oil pressure
400 – 600 kPa (4.0 – 6.0 kg/cm², 57 – 85 psi.)

If oil pressure is lower or higher than specification, the following causes may be considered.

Low oil pressure

- Clogged oil filter
- Leakage from oil passages
- Defective oil pump
- Defective oil pressure regulator
- Damaged O-ring
- Combination of above items

High oil pressure

- Using an engine oil of too high viscosity
- Clogged oil passage
- Clogged oil pressure regulator
- Combination of above items

7) Apply thread lock to the oil pressure service port plug (1).

1342 : Thread lock cement 99000–32050 (SUZUKI Thread Lock 1342 (50 g))

8) Tighten the oil pressure service port plug (1) to specified torque.

Tightening torque
Oil pressure service port plug (a): 13 N·m (1.3 kgf-m, 9.5 lbf-ft)

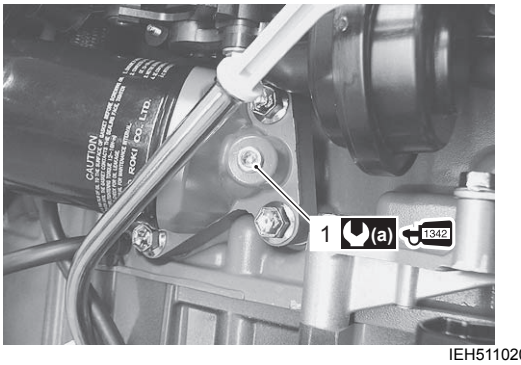

IEH511020055-01

9) Reinstall STBD lower side cover.
   Refer to "Lower Side Cover Removal and Installation" in Section 2A (Page 2A-3).

Cylinder Compression Pressure Check

CENFH5110206021

The compression pressure reading of cylinder is good indicator of its internal condition.
The decision to overhaul the power unit is often based on the results of a compression test.
Periodic maintenance records kept at your dealership should include compression readings for each maintenance service.

1) Start engine and allow to warm up, then shut engine off.
2) Disconnect all fuel injector connectors at fuel injector.
3) Remove all spark plugs.
   Refer to “Spark Plug Removal and Installation” (Page 0B-7).
4) Install compression gauge hose attachment into spark plug hole, then connect compression gauge hose to gauge hose attachment and compression gauge.

   Special tool
   TOOL (A): 09915–64512 (Compression gauge)
   TOOL (B): 09915–64530 (Compression gauge hose)
   TOOL (C): 09915–64550 (Compression gauge hose attachment)

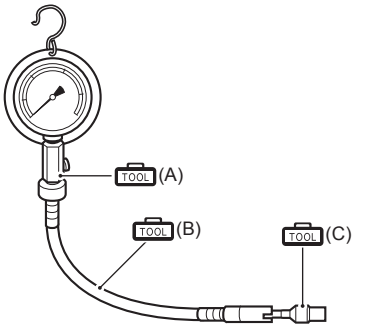

IEH511020049-01

5) Disconnect remote control throttle cable from throttle lever.
6) Move and hold throttle lever in full-open position.

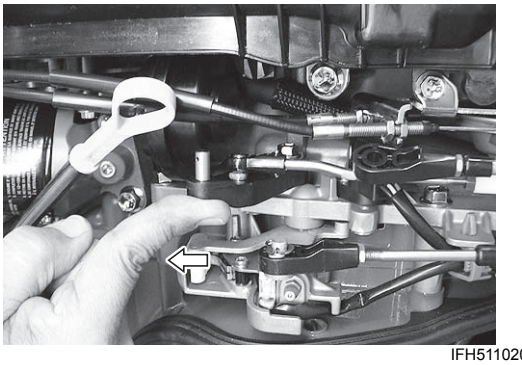

IFH511020025-01

7) While cranking engine with starter motor, note maximum compression pressure reading on gauge for each cylinder.

   NOTE

   Figures shown are guidelines only, not absolute service limits.

   Cylinder compression pressure
   Standard: 1 100 – 1 700 kPa (11 – 17 kgf/cm², 156 – 242 psi.)

   Cylinder compression pressure max. difference between cylinders
   100 kPa (1.0 kgf/cm², 14 psi.)

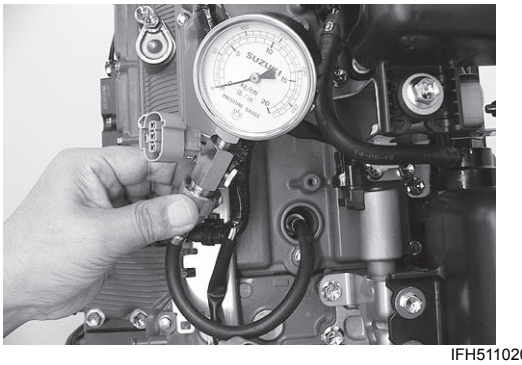

IFH511020026-01

   Low compression pressure can indicate one or more of following:

   - Excessively worn cylinder wall
   - Worn piston or piston rings
   - Stuck piston rings
   - Poor seating of valves
   - Ruptured or otherwise damaged cylinder head gasket

8) Reinstall parts removed earlier.

Section 1

Power Head

CONTENTS

Precautions 1-1
Precautions 1-1
Precautions for Powerhead 1-1

Engine Control 1A-1
Precautions 1A-1
Precautions on Engine Control Diagnosis 1A-1
General Description 1A-2
Engine Control System Description 1A-2
Engine Control Module (ECM) 1A-3
Caution System Description 1A-6
Self-Diagnostic System Description 1A-9
Fail-Safe System Description 1A-12
Operating Hour Indication System Description 1A-13
Oil Change Reminder System Description 1A-14
Water in Fuel Alert System Description 1A-15
Troll Mode System Description 1A-15
Multi-Stage Induction Description 1A-16
VVT (Variable Valve Timing) System Description 1A-19
Component Location 1A-21
Engine Control System Components / Engine Electrical Device Location 1A-21
Diagnostic Information and Procedures 1A-21
ECM Power and Ground Circuit Check 1A-21
Troubleshooting with Self-Diagnostic Code 1A-23
Self-Diagnostic Code “3 – 4” MAP Sensor 1A-23
Self-Diagnostic Code “1 – 4” Cylinder Temp. Sensor 1A-24
Self-Diagnostic Code “2 – 3” IAT Sensor 1A-25
Self-Diagnostic Code “1 – 5” Ex. Manifold Temp. Sensor 1A-26
Self-Diagnostic Code “3 – 7” Trim Sensor 1A-27
Self-Diagnostic Code “2 – 1” TPS (Throttle Position Sensor) 1A-28
Self-Diagnostic Code “1 – 2” SPS (Shift Position Sensor) 1A-29
Self-Diagnostic Code “1 – 1” Rectifier / Regulator (Over Charging) 1A-30
Self-Diagnostic Code “4 – 3” Fuel Injector 1A-31
Self-Diagnostic Code “4 – 2” CKP Sensor 1A-32
Self-Diagnostic Code “2 – 4” CMP Sensor #1 ..... 1A-33
Self-Diagnostic Code “2 – 6” CMP Sensor #2 (VVT) 1A-34
Self-Diagnostic Code “2 – 2” Air Intake System 1A-35
Self-Diagnostic Code “3 – 2” MAP Sensor 2 ..... 1A-36
Self-Diagnostic Code “3 – 3” Neutral Switch 1A-38
Self-Diagnostic Code “5 – 1” VVT Advance 1A-39
Self-Diagnostic Code “5 – 3” Oil Pressure Switch 1A-40
Self-Diagnostic Code “6 – 1” OCV (Oil Control Valve) 1A-41
Self-Diagnostic Code “5 – 4” Knock Sensor 1A-41
Self-Diagnostic Code “3 – 6” O2 Sensor 1A-42
Self-Diagnostic Code “6 – 3” O2 Sensor Heater 1A-43
Troubleshooting Without Self-Diagnostic Code 1A-44
IAC System Troubleshooting 1A-45
Service Instructions 1A-46
How to Use the 36-Pin Test Cord Set 1A-46
Inspection of the ECM and Its Circuit 1A-47
ECM Main Relay Inspection 1A-50
ECM Removal and Installation 1A-50

Engine Electrical Devices 1C-1
Precautions 1C-1
Precaution for Engine Electrical Device 1C-1
General Description 1C-1
Sensor and Switch Description 1C-1
ECM Power Source Line 1C-6
Component Location 1C-7
Location of Sensor and Switch 1C-7
Service Instructions 1C-7
Resistance Check 1C-7
Cylinder Temp. Sensor Removal and Installation 1C-8
Cylinder Temp. Sensor Inspection 1C-9
Ex. Manifold Temp. Sensor Removal and Installation 1C-9
Ex. Manifold Temp. Sensor Inspection 1C-10
CKP Sensor Removal and Installation 1C-10
CKP Sensor Inspection 1C-11
IAT Sensor Removal and Installation 1C-11
IAT Sensor Inspection 1C-11
CMP Sensor Removal and Installation 1C-12
CMP Sensor Inspection 1C-12
MAP Sensor Removal and Installation 1C-13

MAP Sensor Output Voltage Inspection.....1C-14
O2 Sensor Removal and Installation.....1C-15
O2 Sensor Output Voltage Inspection.....1C-15
O2 Sensor Heater Inspection.....1C-16
Knock Sensor Removal and Installation 1C-17
Knock Sensor Inspection 1C-17
OCV (Oil Control Valve) Inspection.....1C-18
VSV (Vacuum Switching Valve) Removal and Installation.....1C-19
VSV (Vacuum Switching Valve) Inspection.....1C-19
IAC Valve Removal and Installation.....1C-20
IAC Valve Inspection.....1C-20
TPS Inspection.....1C-21
Shift Position Sensor Removal and Installation.....1C-21
Shift Position Sensor Inspection 1C-23
Trim Sensor Removal and Installation 1C-24
Trim Sensor Inspection 1C-25
Emergency Stop Switch Inspection.....1C-26

Power Unit Mechanical 1D-1
General Description 1D-1
Power Unit Construction Description 1D-1
Diagnostic Information and Procedures.....1D-1
Cylinder Compression Check.....1D-1
Oil Pressure Check 1D-1
Service Instructions.....1D-2
Tappet Clearance Inspection 1D-2
Ring Gear Cover Removal and Installation.....1D-2
Air Intake Silencer Case Removal and Installation.....1D-2
Electric Parts Holder Removal and Installation 1D-3
Intake Manifold and Throttle Body Components.....1D-7
Intake Manifold Removal and Installation 1D-8
Throttle Control Cable Installation and Adjustment 1D-11
Throttle Link Rod Adjustment.....1D-13
Intake Manifold Disassembly and Assembly.....1D-13
Intake Manifold Component Inspection.....1D-15
Throttle Body Removal and Installation 1D-16
Throttle Body Inspection 1D-16
Cylinder Head Cover Removal and Installation.....1D-17
OCV (Oil Control Valve) Removal and Installation.....1D-19
OCV (Oil Control Valve) Inspection.....1D-20
Power Unit Removal and Installation 1D-20
Timing Chain, Camshaft Sprocket, Balancer Chain Components 1D-28
Timing Chain, Camshaft Sprocket, Balancer Chain Removal and Installation 1D-29
Timing Chain, Camshaft Sprocket, Balancer Chain Related Parts Inspection 1D-36
Camshaft, Tappet and Shim Removal and Installation.....1D-38
Camshaft, Tappet and Shim Inspection.....1D-40
Cylinder Head Removal and Installation.....1D-43
Cylinder Head Disassembly and Assembly 1D-44
Cylinder Head Components Inspection and Servicing 1D-46
Counter-Balancer Mechanism Removal and Installation 1D-52
Counter-Balancer Mechanism Disassembly and Assembly.....1D-53
Counter-Balancer Mechanism Component Inspection.....1D-55
Pistons, Piston Rings, Connecting Rods, Cylinder and Crankshaft Components 1D-56
Pistons, Piston Rings, Connecting Rods, Cylinder and Crankshaft Disassembly and Assembly.....1D-56
Cylinder, Piston and Piston Ring Inspection and Servicing 1D-66
Piston Pin and Conrod Inspection.....1D-68
Crank Pin and Conrod Bearing Inspection.....1D-69
Crankshaft Inspection 1D-71
Crankshaft Main Bearing Inspection 1D-72
Crankshaft Drive Gear Inspection 1D-75
Crankshaft Oil Seal Inspection.....1D-75
Oil Filter Stand Seal Ring Inspection 1D-75

Power Unit Lubrication 1E-1
General Description 1E-1
Engine Lubrication Description 1E-1
Schematic and Routing Diagram 1E-2
Engine Oil Lubrication Chart 1E-2
Diagnostic Information and Procedures 1E-3
Oil Pressure Check 1E-3
Oil Change Reminder System.....1E-3
Low Oil Pressure Caution System 1E-3
Powerhead Lubrication System Diagnosis.....1E-3
Service Instructions 1E-4
Oil Pump Removal and Installation 1E-4
Oil Pump Disassembly and Assembly 1E-5
Oil Pump Component Parts Inspection 1E-6
Oil Pressure Switch Removal and Installation 1E-7
Oil Pressure Switch Inspection 1E-8
Oil Strainer Removal and Installation.....1E-8
Oil Strainer Related Parts Inspection 1E-8
Piston Cooling Jet Removal and Installation.....1E-9
Piston Cooling Jet Inspection.....1E-9

Power Unit Cooling System.....1F-1
General Description 1F-1
Water Cooling System Description 1F-1
Displacement Type Water Pump Description 1F-1
Water Pressure Valve Description 1F-1
Schematic and Routing Diagram 1F-2
Cooling Water Circulation Chart.....1F-2
Diagnostic Information and Procedures 1F-3
Powerhead Cooling System Diagnosis 1F-3
Service Instructions 1F-3
Thermostat Removal and Installation.....1F-3
Thermostat Inspection.....1F-4
Water Pressure Valve Removal and Installation 1F-5

Water Pressure Valve Related Item Inspection 1F-6
Water Pump Removal and Installation 1F-6
Water Pump Related Item Inspection 1F-6
Water Tube Removal and Installation 1F-6
Water Tube Related Item Inspection 1F-6

Fuel System 1G-1
Precautions 1G-1
Precautions on Fuel System Service 1G-1
General Description 1G-1
Electronic Fuel Injection System Description 1G-1
Fuel Delivery System Component Description 1G-4
High Pressure Fuel Pump Control System Description 1G-7
Air Intake Components Description 1G-8
Idle Air Control System Description 1G-10
Diagnostic Information and Procedures 1G-12
Fuel Pressure Inspection 1G-12
Fuel System Diagnosis 1G-14
Fuel Injection System Troubleshooting 1G-15
Service Instructions 1G-16
Fuel Pressure Relief Procedure 1G-16
Fuel Line Removal and Installation 1G-16
Fuel Line Inspection 1G-17
Fuel Leakage Check Procedure 1G-17
Inspection of Fuel Hose Connections 1G-17
High Pressure Fuel Pump Operating Sound Inspection 1G-18
Fuel Vapor Separator Removal and Installation 1G-18
Fuel Vapor Separator Disassembly and Assembly 1G-19
Inspection of Fuel Vapor Separator Component Parts 1G-23
Fuel Injector Inspection with Injector in Place 1G-24
Individual Fuel Injector Operating Sound Inspection 1G-24
Fuel Injector Operating Signal Inspection 1G-25
Fuel Injector Removal and Installation 1G-26
Low Pressure Fuel Pump Removal and Installation 1G-28
Low Pressure Fuel Pump Inspection 1G-29
Low Pressure Fuel Line Components 1G-29
Low Pressure Fuel Filter / Fuel Hose Inspection 1G-30
High Pressure Fuel Filter Removal and Installation 1G-30
Water Detection Switch Inspection 1G-31

Ignition System 1H-1
General Description 1H-1
Ignition System Description 1H-1
Ignition Control Description 1H-2
Component Location 1H-4
Ignition System Components Location 1H-4
Diagnostic Information and Procedures 1H-4
Ignition System Symptom Diagnosis 1H-4
Ignition System Troubleshooting 1H-5
Service Instructions 1H-6
Spark Plug Removal and Installation 1H-6
Spark Plug Inspection 1H-6
Ignition Coil Removal and Installation 1H-6
Ignition Coil Inspection 1H-6
Ignition Coil Operating Signal Inspection 1H-7
CKP Sensor Inspection 1H-8
CMP Sensor Inspection 1H-8
Ignition Switch Inspection 1H-8
ECM Main Relay Inspection 1H-8

Starting System 1I-1
General Description 1I-1
Electric Starter System Description 1I-1
Starter Motor Operation Condition Description 1I-2
Start-In-Gear Protection System Description 1I-2
Component Location 1I-3
Starting System Components Location 1I-3
Diagnostic Information and Procedures 1I-3
Starter System Troubleshooting 1I-3
Service Instructions 1I-4
Starter Motor Removal and Installation 1I-4
Starter Motor Test 1I-5
Starter Motor Components 1I-7
Starter Motor Disassembly and Assembly 1I-7
Starter Motor Components Inspection and Servicing 1I-9
Ignition Switch Inspection 1I-13
Starter Motor Relay Inspection 1I-14
Neutral Switch Removal and Installation 1I-14
Neutral Switch Inspection 1I-16

Charging System 1K-1
General Description 1K-1
Charging System Description 1K-1
Battery Requirement Description 1K-3
Component Location 1K-3
Charging System Components Location 1K-3
Diagnostic Information and Procedures 1K-3
Charging System Diagnosis 1K-3
Service Instructions 1K-4
Charging System Construction 1K-4
Flywheel Removal and Installation 1K-5
Battery Charge Coil Removal and Installation 1K-7
Battery Charge Coil Inspection 1K-8
Rectifier / Regulator Removal and Installation 1K-8
Rectifier / Regulator Inspection 1K-9
Main Fuse Inspection 1K-10

Precautions

Precautions

Precautions for Powerhead

CENFH5111000001

Refer to “General Precautions” in Section 00 (Page 00-1).

NOTICE

If the electrical circuits is shorted while servicing the power head, the powerhead electrical circuit could be damage seriously.

When the intended service operation does not require electric power supply from the battery, be sure to disconnect the negative cable at the battery before starting the service work.

Engine Control

Precautions

Precautions on Engine Control Diagnosis

CENFH5111100001

⚠ WARNING

Service operation of any type performed on engine control system involves a risk of fire and personal injury if proper precaution are not taken.
To prevent any unexpected engine starting, perform the following before proceeding with any CRANKING tests.

- **When performing tests not related to fuel injector operation:**
  - **Disconnect all fuel injector wire connectors.**
- **When performing tests related to fuel injector operation:**
  - **Relieve the fuel pressure in the fuel lines.**
    Refer to "Fuel Pressure Relief Procedure" in Section 1G (Page 1G-16).
  - **Disconnect the high pressure fuel pump wire connector located on the fuel vapor separator.**

⚠ CAUTION

If you do not disconnect the battery before disconnecting or connecting the wiring harness, you could get an electrical shock.
Always turn the ignition switch "OFF" and disconnect the battery cables when wires are being disconnected or connected.

NOTICE

Failure to take proper precaution when disconnecting the harness connector can cause damage to the wiring harness.

Hold and pull the connectors when disconnecting.
Do not pull the wires.

NOTE

- **To troubleshoot the ECM and the engine control system, consisting of sensors and actuators, use the Suzuki Diagnostic System.**
- **The self-diagnostic codes memory in the ECM will remain even if the battery is disconnected.**
- **Each electrical circuit is affected by battery voltage, always use a full-charged battery.**
- **Make sure all ground points have good electrical contact.**
- **Make sure all wires/cables are securely connected.**

General Description

Engine Control System Description

CENFH5111101001

The DF200AT/AZ models employ an integrated control system which performs the control functions for fuel injection, ignition, idle/trolling speed (idle air) etc. through the ECM (Engine Control Module).

System Structure

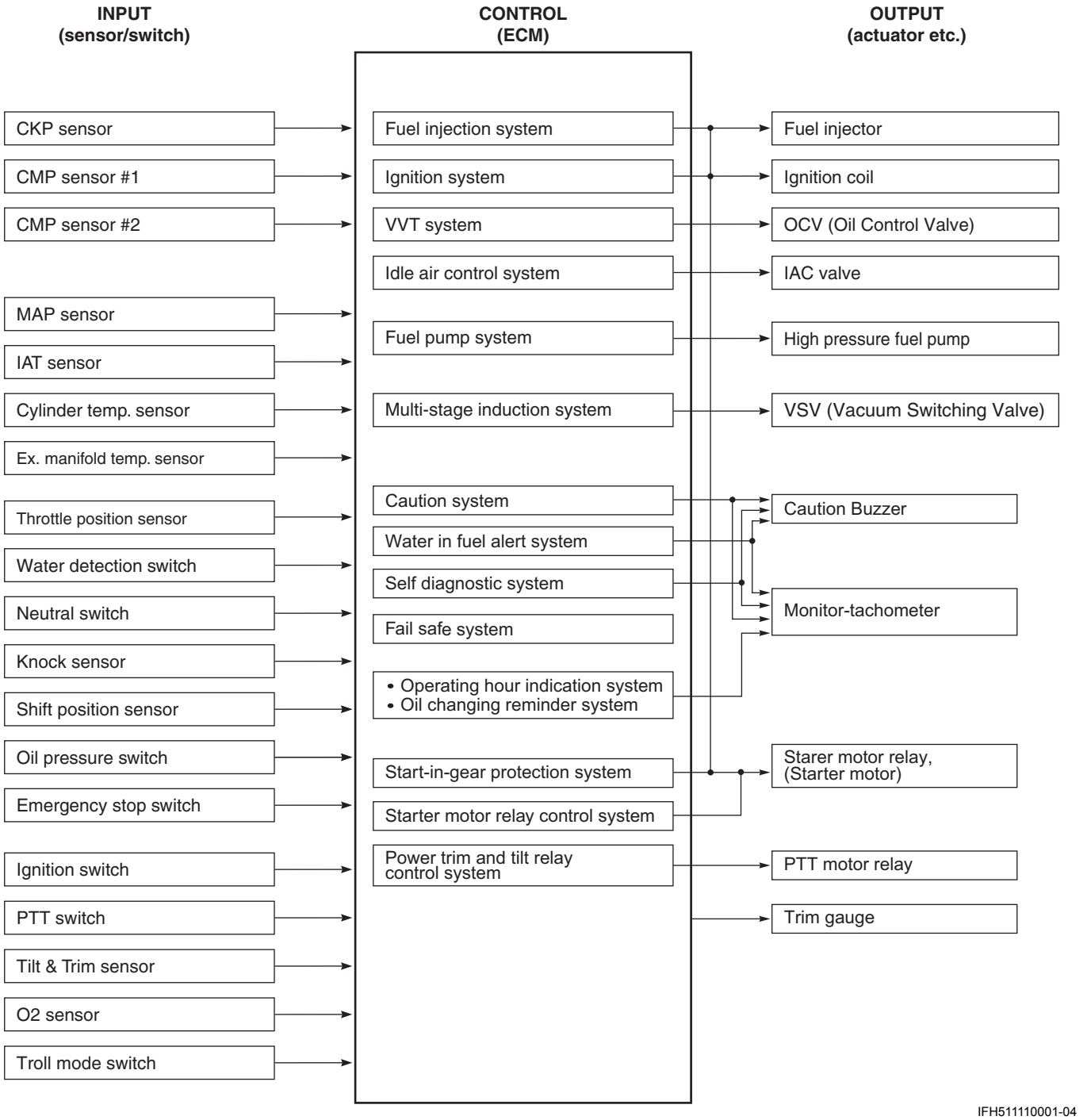

IFH511110001-04

Engine Control Module (ECM)

CENFH5111101002

The ECM sends signals to control the actuators based on the information inputs from each sensor/switch. Major controls are as follows:

Name of control	Description
Fuel injection control	• Controls fuel injection amount and timing.
Ignition control	• Controls ignition timing.
Idle air control	• Controls idling/trolling speed by adjusting the intake air volume through the IAC valve.
VVT system	• Controls intake cam valve timing through OCV (Oil Control Valve).
Fuel pump control	• Controls high pressure fuel pump drive.
Multi-stage induction system	• Changing the length of intake manifold pipes according to engine speed.
Caution system control	• Informs operator of abnormal engine condition. • Controls engine speed, if activated.
Self-diagnostic system control	• Informs operator of sensor/switch malfunction.
Fail-safe system control	• Allows engine operation with a back-up system during sensor/switch malfunction.
Total operating hour indication system control	• Informs operator of total operating time.
Oil changing reminder system control	• Informs operator of time for replacing engine oil on the basis of the maintenance schedule.
Start-in-gear protection system control	• Prevents engine start when shift is positioned in forward or reverse.
Starter motor relay control system	• Prevents starter motor operation when engine is already operating.
Power trim and tilt relay control system	• Controls On/Off for the PTT relay's up and down circuits.
Water in fuel alert system	• Informs operator of water accumulates in the low pressure fuel filter.

NOTE

Information related to the caution system, self-diagnostic system and total operating hour indication system is retained in ECM memory.

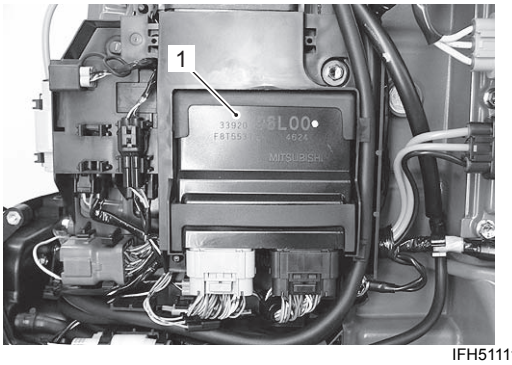

IFH511110027-01

1. ECM

ECM Input / Output Circuit Diagram

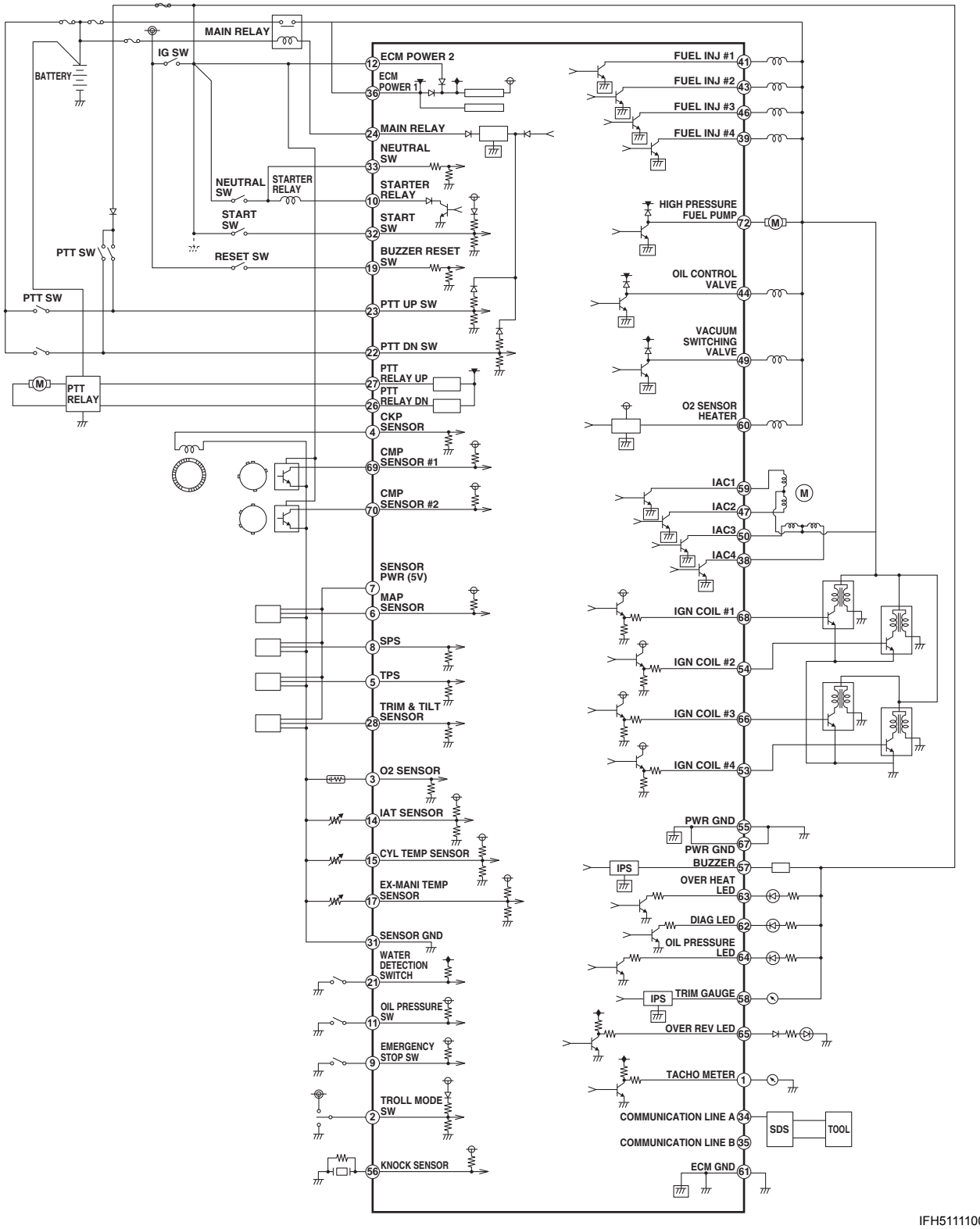

IFH511110002-05

ECM Connector / Terminals Layout

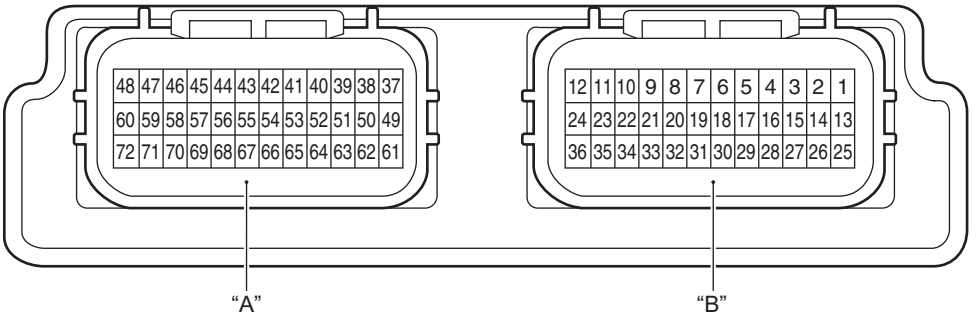

IFH511110003-01

"A": Gray connector	"B": Black connector

Terminal	Wire color	Circuit	Terminal	Wire color	Circuit
1	Y/B	Tachometer	37	—	—
2	V	Troll mode switch	38	W/Bl	IAC valve No.4
3	Gr/Bl	O2 sensor	39	Lg	No.4 fuel injector
4	R/B	CKP sensor	40	—	—
5	Br/Y	Throttle position sensor	41	O/B	No.1 fuel injector
6	W	MAP sensor	42	—	—
7	R	Power source for sensors	43	B/Br	No.2 fuel injector
8	P/Bl	Shift position sensor	44	Br/R	OCV
9	Bl/R	Emergency stop switch	45	—	—
10	G	Starter relay control	46	R/W	No.3 fuel injector
11	Bl	Oil pressure switch	47	R/Y	IAC valve No.2
12	B/Bl	Power source No.2 for ECM	48	—	—
13	—	—	49	Gr/G	VSV
14	Lg/B	IAT sensor	50	O/Bl	IAC valve No.3
15	Lg/W	Cylinder temp. sensor	51	—	—
16	—	—	52	—	—
17	V/W	EX. manifold temp. sensor	53	Lg/R	No.4 ignition coil
18	—	—	54	Bl/Y	No.2 ignition coil
19	O/W	Buzzer cancel	55	B	Ground for power
20	—	—	56	P/Y	Knock sensor
21	R/Bl	Water detection switch	57	Bl/W	Buzzer
22	P	PTT switch (DOWN)	58	W/Y	Trim gauge
23	Lbl	PTT switch (UP)	59	W/B	IAC valve No.1
24	P/B	Ground for main relay	60	Lg/Bl	O2 sensor heater
25	—	—	61	B	Ground for ECM
26	P	PTT relay (DOWN)	62	G/W	CHECK ENGINE lamp
27	Lbl	PTT relay (UP)	63	G/Y	TEMP lamp
28	W/Y	Trim and tilt sensor	64	Bl/B	Oil lamp
29	—	—	65	P/W	REV-LIMIT lamp
30	—	—	66	Gr/Y	No.3 ignition coil
31	B/W	Ground for sensors	67	B	Ground for power
32	Br	Starter switch	68	O	No.1 ignition coil
33	Y/G	Neutral switch	69	Y/Bl	CMP sensor No.1
34	O/Y	PC Communication line (A)	70	O/G	CMP sensor No.2
35	Y	PC Communication line (B)	71	—	—
36	Gr	Power source No.1 for ECM	72	B/R	High pressure fuel pump

Caution System Description

CENFH5111101006

The following four caution systems alert the operator when an abnormality occurs on the engine.

- OVER-REVOLUTION CAUTION
- LOW OIL PRESSURE CAUTION
- OVERHEAT CAUTION
- LOW BATTERY VOLTAGE CAUTION

Monitor-Tachometer

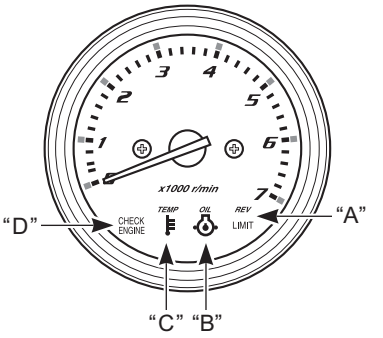

I9J011110004-02

"A": "REV LIMIT" lamp	"C": "TEMP" lamp
"B": "OIL" lamp	"D": "CHECK ENGINE" lamp

Caution type	Caution lamp	Caution buzzer	Engine RPM limited
Over-revolution	Yes "A"	No	Yes
Low oil pressure	Yes "B" ("A")	Yes	Yes
Overheat	Yes "C" ("A")	Yes	Yes
Low battery voltage	Yes "D"	Yes	No

Lamp Check / Buzzer Check

When the ignition key is turned to the "ON" position:

- Four Caution lamps turns on for two seconds.
- Caution buzzer sounds for two seconds.

Over-Revolution Caution System

Condition:

The ECM controlled over revolution limiter will engage at the engine speeds shown below. Once engaged it will initiate an intermittent fuel injection signal to reduce engine speed.

Over revolution limiter

DF200A: 6 300 r/min.

Action:

Engine speed	• Automatically reduced to approx. 3 000 r/min. by an intermittent fuel injection signal. • If the operator decreases the engine speed below the over revolution system maximum preset value, within 10 seconds, the over-revolution caution control will be canceled.
Caution lamp	"REV-LIMIT" lamp lights continuously.
Caution buzzer	No buzzer sounds.

Reset:

Close the throttle to reduce the engine speed below approx. 3 000 r/min for one second.

Low Oil Pressure Caution System

Condition:

Immediate activation of the system when the oil pressure switch is turned “ON” due to an engine oil pressure drop below 100 kPa (1.0 kg/cm^2, 14 psi.) while the engine is running.

Action:

Engine speed	• Automatically reduced to approx. 1 000 r/min. maximum by an intermittent fuel injection signal. • The engine automatically stops 3 minutes after the caution system is activated.
Caution lamp	• “OIL” lamp lights continuously. • “REV-LIMIT” lamp lights continuously during engine speed rev-limiter activation (1 000 r/min, or higher).
Caution buzzer	• Sounds in a series of long (1.5 sec.) beeps.

NOTE

If the engine is automatically stopped due to the caution system, the engine can be started again. However, the caution system will repeatedly activate until the cause is eliminated.

Reset:

Stop the engine and check the engine oil level. Refill the engine oil to the correct level if it is below the low oil level mark.

If the engine oil level is correct, the following causes may be considered:

- Improper oil viscosity.
- Malfunctioning oil pressure switch.
- Clogged oil strainer or oil filter.
- Worn oil pump relief valve.
- Oil leakage from the oil passage.
- Excessive wear/damage of oil pump.

NOTE

The low oil pressure caution system will reset when the oil pressure is restored to over 100 kPa (1.0 kg/cm^2, 14 psi.) at approx. 1 000 r/min. or less engine speed operation.
The engine must be stopped and checked immediately once the system is activated.

Overheat Caution System
Condition 1 (Maximum temperature)
Immediate activation of the system when:

- Cylinder temperature reaches 110 °C (230 °F)
- Exhaust manifold temperature reaches 104 °C (219 °F)

Condition 2 (Gradient temperature – Temp. rise vs. Time)
Immediate activation of the system when:

- The average temperature difference between three consecutive 10 second measurement periods of the cylinder temperature sensor, at engine speeds of 500 r/min or higher, exceeds the limits as shown below.

Temperature range	Temperature difference
80 – 89 °C (176 – 192 °F)	Approx. 6 °C (10 °F)
90 °C – (194 °F –)	Approx. 1.0 °C (1.8 °F)

- The average temperature difference between three consecutive 10 second measurement periods of the exhaust manifold temperature sensor, at engine speeds of 500 r/min. or higher, exceeds the limits as shown below.

Temperature range	Temperature difference
72 – 84 °C (161 – 183 °F)	Approx. 11 °C (20 °F)
85 °C – (185 °F –)	Approx. 1.0 °C (1.8 °F)

Action:

Engine speed	• Automatically reduced to approx. 3 000 r/min. maximum by intermittent fuel injection and ignition signals. • The engine automatically stops 3 minutes after the caution system is activated.
Caution lamp	• “TEMP” lamp lights continuously. • “REV-LIMIT” lamp lights continuously during engine speed rev-limiter activation (3 000 r/min. or higher).
Caution buzzer	• Sounds in a series of long (1.5 sec.) beeps.

NOTE

If the engine is automatically stopped due to the caution system, the engine can be started again. The caution system will repeatedly activate until the cause is eliminated.

Reset:
Close the throttle completely and then shift into neutral.
System reset will occur when the cylinder temperature drops below the limits shown below. However, the system may be activated again unless the cause for overheat (such as insufficient water) is removed.

Caution cause	Reset temperature
Condition 1 (Maximum temperature)	Approx. 70 – 78 °C (158 – 172 °F)
Condition 2 (Gradient temp. – Temp. rise vs. Time)	Approx. 68 – 76 °C (154 – 169 °F)

Low Battery Voltage Caution System
Condition 1:
The system is activated when the battery voltage decreases to less than 9 V for 30 seconds.
Condition 2:
The system is activated if the battery voltage is less than 2 V for more than 2 seconds with the ignition switch is turned "ON" and the engine not running.

Action:

Engine speed	• No engine speed limiter is activated.
Caution lamp	• "CHECK ENGINE" lamp lights continuously.
Caution buzzer	• Sounds in a series of long (1.5 sec.) beeps.

Reset:
Condition 1:
The caution system is automatically reset when battery voltage increases to more than 9 V.
Refrain from using electrical equipment requiring high amperage, such as hydraulic trim tabs, hydraulic jack plate, etc., after this caution is activated.
Condition 2:
For the caution system to engage under this condition possibilities such as a deteriorated battery, poor battery cable connection, battery switch in the OFF position, etc, must be inspected.
To cancel the caution system activation for these conditions, check all power source related items and eliminate the problem.

Self-Diagnostic System Description

CENFH5111101007

The self-diagnostic system alerts the operator when an abnormality occurs in a signal from a sensor, or switch, etc. When the system is activated, the "CHECK ENGINE" lamp flashes (lights intermittently) according to each code pattern, along with a buzzer sound.
When the engine is running, the buzzer sounds a series of short (0.2 sec.) beeps. When the engine is not running, the buzzer sounds according to each code pattern, but not simultaneously with the flashing lamp. The buzzer sound can be temporally canceled by pushing the ignition key in.

Monitor-Tachometer

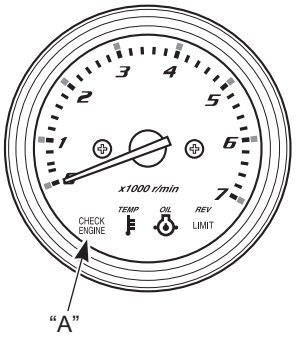

I9J011110005-01

"A": "CHECK ENGINE" lamp

Priority / Code / Pattern for Self-Diagnostic System Operation
0: OFF, 1: ON

Priority	Failed item	Code	Lamp flashing pattern	Fail-Safe system active
1	MAP sensor 1	3 – 4	 MCODE00D34-0-01	Yes
2	Cylinder temp. sensor	1 – 4	 MCODE00D14-0-01	Yes
3	IAT sensor	2 – 3	 MCODE00D23-0-01	Yes
4	CKP sensor	4 – 2	 MCODE00D42-0-01	No
5	CMP sensor #1	2 – 4	 MCODE00D24-0-01	No
6	Air intake system	2 – 2	 MCODE00D22-0-01	Yes
7	MAP sensor 2	3 – 2	 MCODE00D32-0-01	No
8	Exhaust manifold temp. sensor	1 – 5	 MCODE00D15-0-01	Yes
9	Fuel injector	4 – 3	 MCODE00D43-0-01	No
10	Throttle position sensor	2 – 1	 MCODE00D21-0-01	Yes
11	Shift position sensor	1 – 2	 MCODE00D12-0-01	Yes
12	CMP sensor #2 (VVT)	2 – 6	 MCODE00D26-0-01	Yes
13	VVT advance	5 – 1	 MCODE00D51-0-01	Yes
14	Neutral switch	3 – 3	 MCODE00D33-0-01	No
15	Oil control valve	6 – 1	 MCODE00D61-0-01	No
16	Rectifier/Regulator (Over-charging)	1 – 1	 MCODE00D11-0-01	No
17	Oil pressure switch	5 – 3	 MCODE00D53-0-01	No
18	Trim sensor	3 – 7	 MCODE00D37-0-01	No
19	Knock sensor	5 – 4	 MCODE00D54-0-01	Yes
20	O2 sensor	3 – 6	 MCODE00D36-0-04	Yes
21	O2 sensor heater	6 – 3	 MCODE00D63-0-01	Yes

NOTE

- **If two or more items fail at once, the self-diagnostic indication appears according to the priority order. The indication repeats three times.**
- **If the failed item remains, the self-diagnostic indication appears again after turning the ignition switch "ON".**
- **After correcting failed item, the self-diagnostic indication appears until the ECM receives the proper signal with the engine running or turn on the ignition switch from OFF.**
- **It is the basic theory that the cancellation of self-diagnostic indication is automatically performed when the failure is corrected and then supplying power to the ECM or operating the motor to receive a normal signal from sensor, switch, etc. by the ECM.**
  However, in addition to the above, it has to meet the following conditions.
  - **The period of 20 – 30 seconds which is necessary for the ECM to decide the signal is normal.**
  - **In the case of the codes 5-1 "VVT advance" or 6-1 "oil control valve", it is necessary to operate the VVT system actually.**
    So it is required to operate the motor at around 3 500 r/min for a certain period.
    However, the self-diagnostic code remains until the ECM decides the input signal during cruising.
- **The Rectifier/Regulator self-diagnostic indication may not be displayed when the ignition switch is turned "ON" because the ECM cannot detect rectifier/regulator charging output if the engine is not running.**
  Under this condition, the buzzer will not sound a 1 – 1 code.
  However, if the rectifier/regulator has failed, the self diagnostic indication will appear again after starting the engine.

Condition for Self-Diagnostic System Operation

Failed item	Condition
MAP sensor 1	• No signal (With engine running). • Receiving an out of range "37 – 860 mmHg (1.45 – 33.86 inHg) (0.2 – 4.84 V)" signal (With the engine running.).
Cylinder temp. sensor	• No signal. • Receiving an out of range "– 46 to + 170 °C (– 50.8 – +338 °F) (0.10 – 4.6 V)" signal.
IAT sensor	• No signal. • Receiving an out of range "– 46 to + 169 °C (– 50.8 – +336.2 °F) (0.10 – 4.6 V)" signal.
CKP sensor	• During the rotation of the predetermined crankshaft angle, the normal CKP sensor signal pattern is not received by the ECM.
CMP sensor #1	• During four crankshaft rotations, the normal CMP sensor signal pattern is not received by the ECM.
Air intake system	• During the ECM's receiving input of the complete close signal from the throttle position sensor, the engine operates at an abnormally high speed. (Criterion: 2 100 r/min minimum)
MAP sensor 2 (Pressure detect passage)	• Receiving unchanging signal regardless engine speed change. • From TPS sensor, the full close signal is inputted, but from the MAP sensor, the signal voltage exceeds 2.0 V.
Exhaust manifold temp. sensor	• No signal. • Receiving an out of range "– 46 to + 170 °C (– 50.8 – +338 °F) (0.10 – 4.6 V)" signal.
Fuel injector	• No operation signal from the ECM.
Throttle position sensor	• No signal. • Receiving an out of range "0.2 – 4.8 V" signal.
Rectifier/Regulator (Over-charging)	• Receiving 16 V or higher signal.
Oil pressure switch	• While the engine is stopped and the ignition switch is on, the ECM receives an "OFF" signal from the oil pressure switch.
CMP sensor (VVT)	• During two crankshaft rotation, 4 signals are not input to ECM.
VVT advance	• There is a large difference between the target advance angle and the actual advance angle.

Failed item	Condition
Neutral switch	• While the shift sensor outputs the forward or reverse signal, the ECM receives input of the neutral signal from the neutral switch.
Oil control valve	• OCV not operating.
Trim sensor	• Receiving an out of range “0.2 – 4.8 V” signal.
Knock sensor	• No signal • Receiving an out of range “0.55 – 4.39 V” signal.
O2 sensor	• The compensation value of fuel injection amount is more than the predetermined value while the O2 feedback is executed. • The compensation value of fuel injection amount is below the predetermined value while the O2 feedback is executed.
O2 sensor heater	• No operation signal comes from the ECM. (Open or short in O2 sensor heater circuit)

Fail-Safe System Description

CENFH5111101008

The fail-safe system is closely related to the self-diagnostic system.
When an abnormality occurs in a sensor signal, the ECM ignores the out-of-range signal and assumes a pre-programmed value for the failed sensors.
This allows the engine to continue running under the fail-safe condition.

Pre-Programmed Value for Fail-Safe System

Failed item	Pre-Programmed value
MAP sensor 1	• 240 – 760 mmHg (9.4 – 30 inHg) (The control takes place in accordance with the engine speed.) • VVT advance is fixed at the most retarded angle.
Air intake system	• The control is executed with the maximum engine speed of 2 000 r/min.
Cylinder temp. sensor	60 °C (140 °F)
IAT sensor	45 °C (113 °F)
Exhaust manifold temp. sensor	60 °C (140 °F)
Throttle position sensor	• The control is executed with the throttle opening at 30 degrees.
Shift position sensor	• The shift position (Fwd/Neu/Rev) is detected with the neutral switch signal. • The IAC control follows the forward gear map.
CMP sensor (VVT)	• VVT advance is fixed at the most retarded angle.
VVT advance	• VVT advance is fixed at the most retarded angle. • The ECM cyclically outputs the drive and stop signals for the OCV and when the difference between the VVT’s target advance angle and the actual advance angle has come to the normal range, the diagnostic code display is canceled.
Trim sensor	• The control is continued with fixed sensor output as 3.5 V.
Knock sensor	• The ignition timing delays with the predetermined amount.
O2 sensor	• The fuel injection amount is controlled with the base map. (The O2 feedback can not be executed.)
O2 sensor heater	• The fuel injection amount is controlled with the base map. (The O2 feedback can not be executed.)

NOTE

There is no back-up system for the ECM itself. The engine will stop if it has failed.

Operating Hour Indication System Description

CENFH5111101013

When the ignition switch is initially turned “ON” (from “OFF”), the ECM tests the caution system by turning on all four lamps in the monitor-tachometer and sounding the caution buzzer for an initial two seconds.
For the next three seconds, the ECM indicates the total operating hours, using a combination of the tachometer needle and “REV-LIMIT” lamp flash.

NOTE

The total operating hours displayed are those of the actual engine operation, not the ignition switch “ON” time.

Monitor-Tachometer

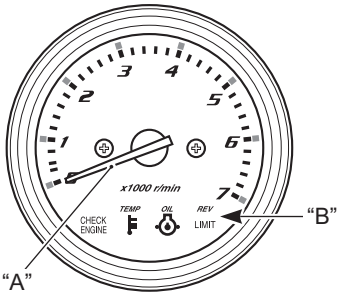

I9J011110006-01

“A”: Needle	“B”: “REV-LIMIT” lamp

Chart of Total Operating Hours Indication

Total operating hours	Monitor-Tachometer	
	Needle “A” indication	REV-LIMIT lamp “B” flashing*
0 h – (49 h)	No	No
50 h	500 r/min.	
60 h	600 r/min.	
↓	↓	
540 h	5 400 r/min.	
550 h	500 r/min.	1 time
560 h	600 r/min.	
↓	↓	
1 040 h	5 400 r/min.	
1 050 h	500 r/min.	2 times
↓	↓	
1 540 h	5 400 r/min.	
1 550 h	500 r/min.	3 times
↓	↓	
2 030 h	5 300 r/min.	
2 040 h or over	5 400 r/min.	3 times

*: One lamp flash corresponds to 500 hours.

Oil Change Reminder System Description

CENFH5111101009

This system informs the operator that it is time to change the ENGINE OIL based on the recommended maintenance schedule.
When the total motor operating hours has reached the pre-programmed hours, the “OIL” lamp will flash, and the buzzer will begin a series of double beeps if the engine is not running (but ignition switch is “ON”).
The above mentioned indication will repeat until the activated system is manually canceled.

NOTE

This system will activate up to 2 100 hour’s operation.

Indication of System Activation

Buzzer

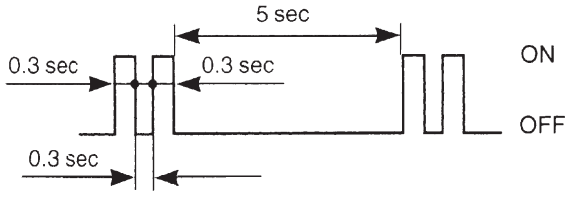

I9J011110008-01

Oil lamp

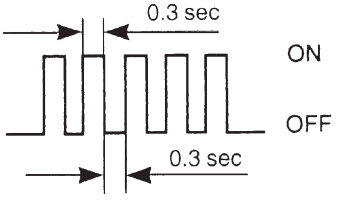

I9J011110009-01

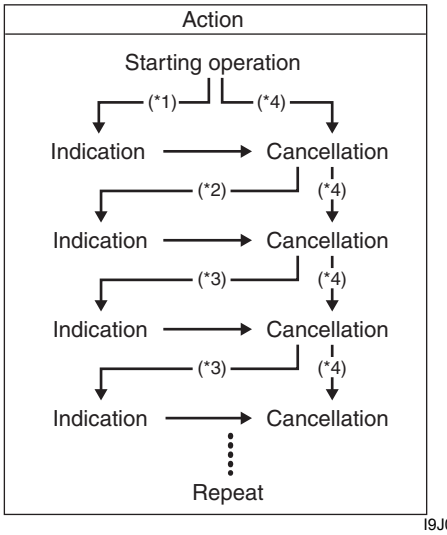

I9J011110010-03

*1:	Lapse of initial 20 hour’s operation
*2:	Lapse of 80 hour’s operation
*3:	Lapse of 100 hour’s operation
*4:	When performing cancellation before system activation

Cancellation Procedure

1) Turn the ignition key to the “ON” position.
2) Remove the emergency stop switch plate (1).
3) Pull out the emergency stop switch knob (2) three times in ten seconds.
   A short beep will be heard if the cancellation is successful.
4) Turn the ignition key to the “OFF” position.
5) Set the emergency stop switch plate (1) into the original position.

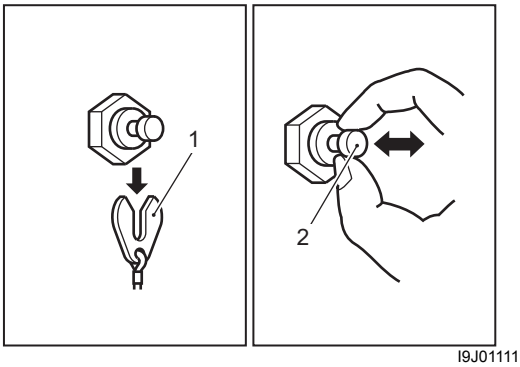

I9J011110007-02

NOTE

- **Cancellation of the system is possible whether or not the engine oil has been replaced.**
  Once the system has been activated, SUZUKI strongly recommends that the engine oil be replaced before canceling the system.
- **If the engine oil has been replaced with the system not activated, it is still necessary to perform the cancellation procedure to reset the Oil Change Reminder System.**

Water in Fuel Alert System Description

CENFH5111101014

This engine is equipped with an integral fuel filter/water separator and associated alert system.
The alert system will activate if water separated from the fuel exceeds a specific volume.
If this system activates, the red REV-LIMIT lamp will flash and a buzzer will begin a series of triple beeps when the engine is in neutral only.

If this system activates, stop the engine, and check the fuel filter/water separator for water.
For inspection and cleaning of the fuel filter, refer to the "Low Pressure Fuel Filter Inspection" in Section 0B (Page 0B-18) and "Water Detection Switch Inspection" in Section 1G (Page 1G-31).

Monitor-Tachometer

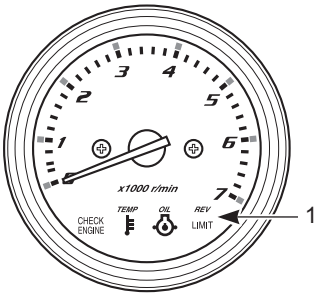

IDG211110030-02

1. "REV-LIMIT" lamp

Troll Mode System Description

CENFH5111101010

The troll mode system consists of the optional troll mode switch, ECM, tachometer/monitor gauge and related electrical wiring.
The "Troll Mode System" is activated by pressing the troll mode switch, when the motor is running at in-gear idle speed. By using this system, you can set and maintain a desired engine speed with the control switch in a range from in-gear idle speed (Approx. 650 r/min) to 1 200 r/min.

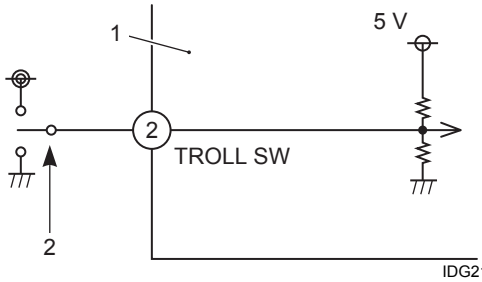

IDG211110031-01

1. ECM	2. Troll mode switch

During Troll mode, ECM will control the engine speed as follows:
ECM calculates the target engine speed with the input signal from the switch, then controls the IAC valve and the trolling speed is made to become to the target speed.

Setting The Troll Mode:

1) Shift into forward or reverse gear and make sure that the throttle is fully closed (in-gear idle speed).
2) Press the "UP" or "DN" position of the troll mode switch, until you hear one beep.
   The REV/TRL (or REV) lamp on the monitor gauge will flash indicating that the motor has been set to the troll mode. The REV/TRL (or REV) lamp will continue to flash while the motor is in the troll mode.

NOTE

The troll mode system will not operate if the switch is depressed when the remote control lever is in the neutral position.

Adjusting Trolling Speed:

- When pressing the "UP" switch, one short beep sounds and the engine speed increases by 50 r/min.
- When pressing the "DN" switch, one short beep sounds and the engine speed decreases by 50 r/min.

NOTE

- **When pressing the "DN" switch at the lower limit of trolling speed, the engine speed will not change and three long (0.8 sec.) beeps will sound.**
- **When pressing the "UP" switch at the upper limit of trolling speed, the engine speed will not change and three long (0.8 sec.) beeps will sound.**
- **Shift operation and throttle control remain operational, even in troll mode.**

Cancelling The Troll Mode:
The troll mode can be cancelled by shifting the remote control lever to the neutral position, or by increasing the engine speed to 3 000 r/min or more. In both cases, two short (0.1 sec.) beeps sound when cancelling the troll mode.

Multi-Stage Induction Description

CENFH5111101011

Outline

The multi-stage induction system is designed to improve the intake efficiency by changing the intake tract volume in accordance with the engine speed.
This system improves low and mid range torque and increases power output at the higher rpm ranges.

System Composition

The intake manifold assembly provides air for the low/mid range intake tract and high speed range tracts. Mounted on the intake manifold are throttle body, VSV (Vacuum Switching Valve), vacuum tank, depression chamber for operating the system and the shut off valve for switching the intake tract. System connection components include one check valve and hose to form the vacuum passage.

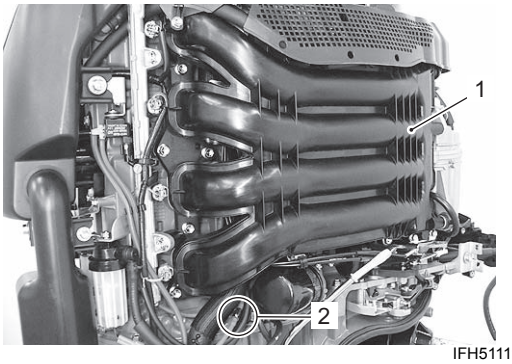

IFH511110028-02

1. Intake manifold assembly	2. Check valve

Vacuum tank

The vacuum tank stores vacuum created during engine operation. The vacuum tank' purpose is to supply a stable vacuum to the depression chamber under the varying vacuum conditions normally occurring within the intake manifold, thereby making it possible to control the shut off valve accurately.
A hose and check valve connects one side of the vacuum tank to the intake manifold. The other side of the tank is connected to the VSV with a hose.

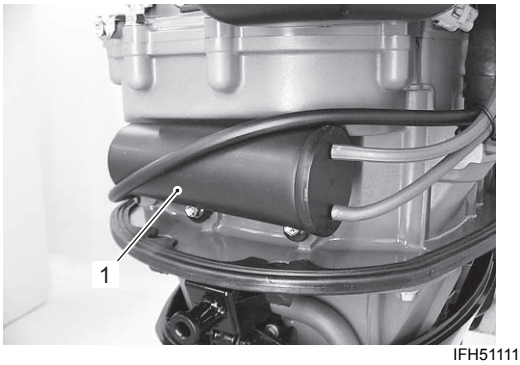

IFH511110029-01

1. Vacuum tank

VSV (Vacuum Switching Valve)

One side of the VSV is connected via hose to the vacuum tank, the other side is connected via hose to the depression chamber.
The VSV receives operating signals from the ECM.
When the ECM signals OFF, the VSV releases vacuum to the atmosphere.
When the ECM signals ON, the VSV supplies vacuum to the depression chamber.

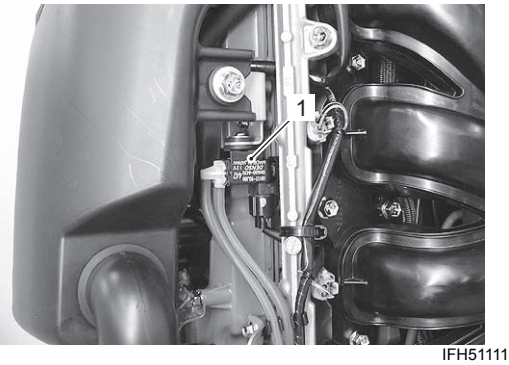

IFH511110030-01

1. VSV (Vacuum switching valve)

Depression chamber

The depression chamber is designed to open/close the shut off valve.

When vacuum is applied to the depression chamber, the rod in the chamber is pulled in closing the shut off valve. When vacuum is not applied to the chamber, the rod returns to the original position, opening the shut off valve.

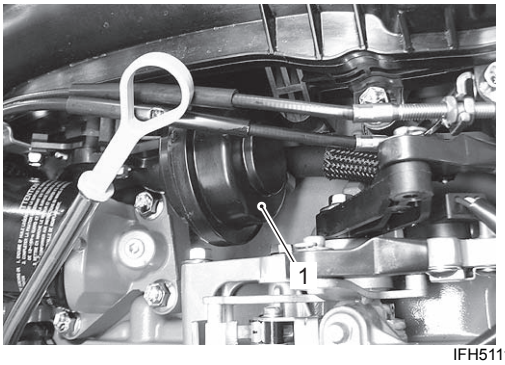

IFH511110031-01

1. Depression chamber	

System operation

This system is operated by the vacuum created during engine operation and controlled by the ECM.

To operate the system (open/close the shut off valve to change the intake tract), the intake manifold, check valve, vacuum tank, VSV and depression chamber are connected with hoses as shown in the illustration.

A rod is used to connect the shut off valve and depression chamber for opening and closing the valve.

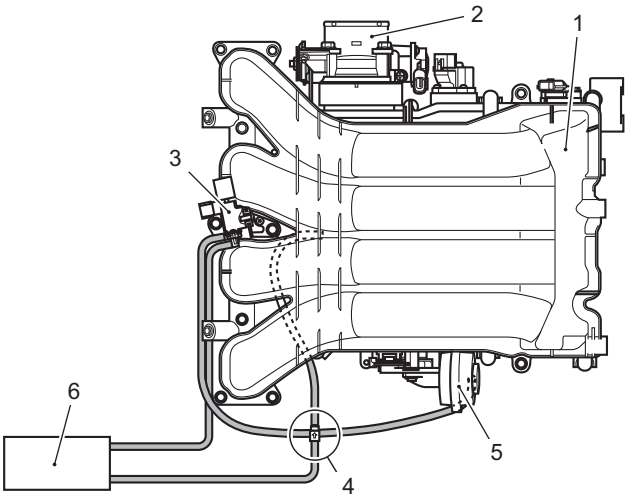

IFH511110022-02

1. Intake manifold	4. Check valve
2. Throttle body	5. Depression chamber
3. VSV	6. Vacuum tank

Low & mid speed range

When engine speed is below the preset value (*), the ECM generates a signal to turn the VSV ON, applying vacuum to the depression chamber which closes the shut off valve.

With the valve closed during the engines low to mid speed range, intake air is supplied through the low and mid speed intake tract only.

In this operating mode, intake air speed is boosted and, combined with the inertia effect to the long intake tract, increases low and mid speed range engine torque.

*: Preset value;

DF200A: Approx. 4 700 r/min

Low and Mid speed

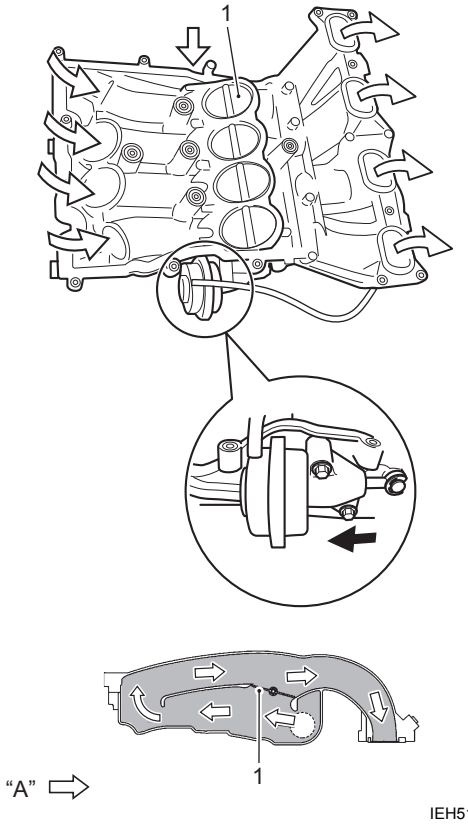

IEH511140006-06

1. Shut off valve	"A": Air flow

High speed range

When the engine speed is above the preset value (*), the ECM generates a signal to turn the VSV OFF, and vacuum is no longer applied to the depression chamber. Without vacuum the shut off valve return spring returns and holds the valve in its normal open position.

In this operating mode, intake air is supplied to the engine through the high speed intake tract only.

This enlarges the intake tract volume, improves intake inertia and efficiency, which increases the engines output power.

High speed

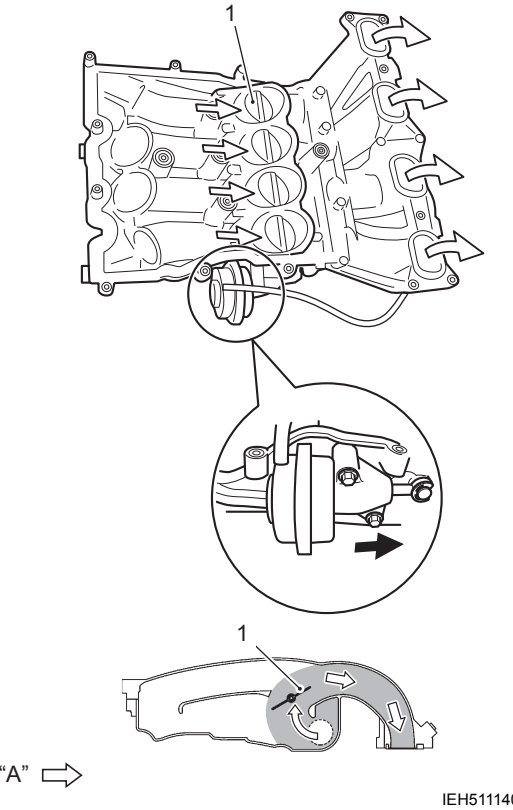

IEH511140007-06

1. Shut off valve	"A": Air flow

VVT (Variable Valve Timing) System Description

CENFH5111101012

- The VVT system is designed to continuously vary intake valve timing to best fit the engines current operating condition.
- The intake cam timing sprocket assembly (VVT actuator) is located at the front end of the intake camshaft. The timing sprocket' internal rotor is operated by engine oil pressure. Since the rotor and intake camshaft is bolted together, the rotor and camshaft move together. Varying the intake valve timing is accomplished by changing the intake camshaft phase angle relative to the intake cam timing sprocket using pressurized engine oil applied to the rotor through an ECM controlled oil control valve.
- The oil control valve (OCV) directs engine oil pressure to the advance chamber or retard chamber inside the intake cam timing sprocket assembly (VVT actuator). The oil control valve operates on a duty cycle controlled by the ECM.
- The ECM determines the optimum valve timing (advance angle) under various operating conditions based on engine speed, manifold pressure (throttle opening) and cylinder wall temperature. These input values are then used to control the position of the oil control valve (OCV). The ECM also detects the actual advance angle from the CMP sensor inputs to perform feedback control and accurately maintain the target advance angle.

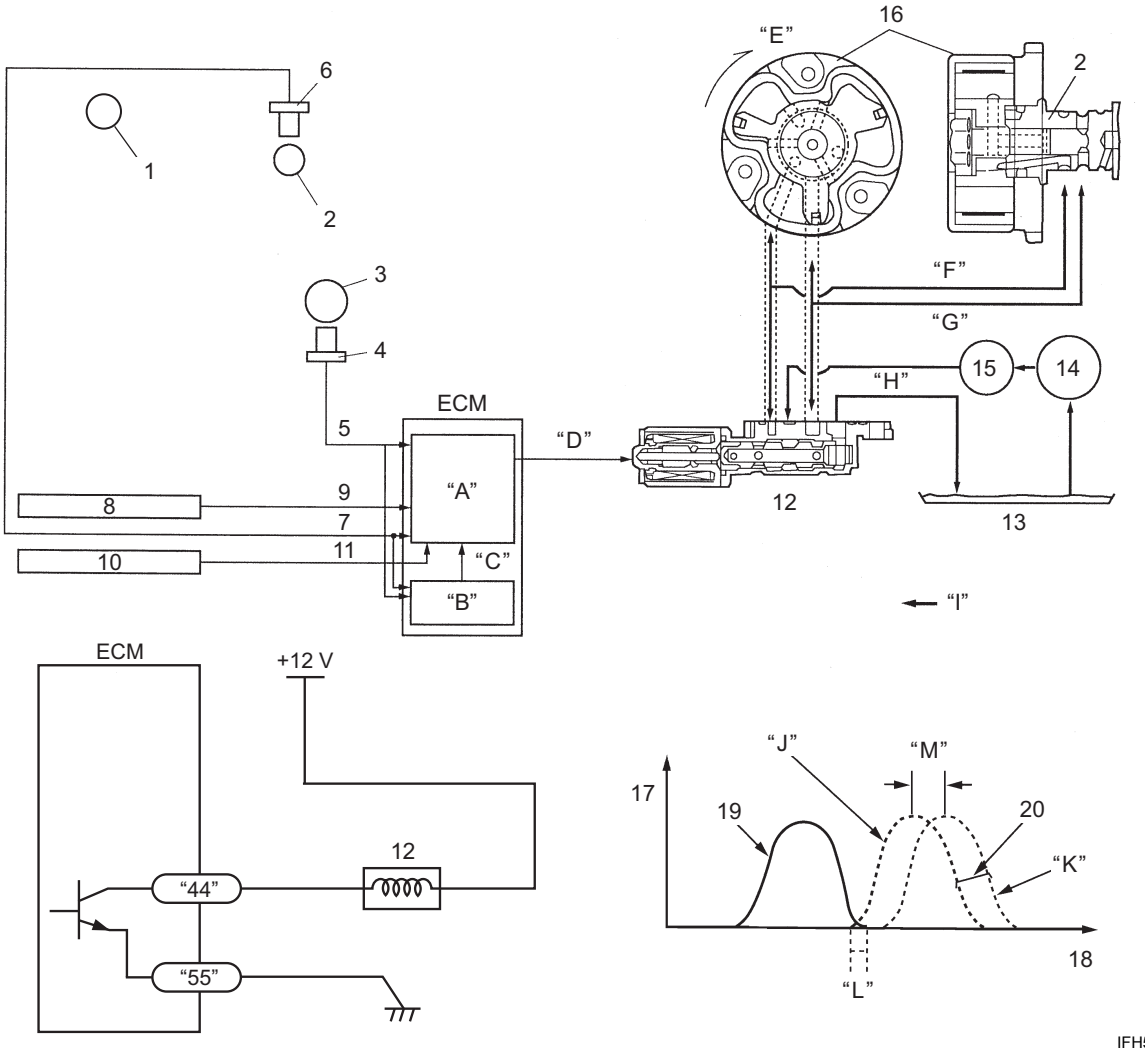

IFH511110023-01

1. Ex. camshaft	10. MAP sensor	19. Ex. valve	"H": Drain
2. In. camshaft	11. Manifold pressure signal	20. In. valve	"I": Engine oil pressure
3. Crankshaft	12. Oil control valve (OCV)	"A": Target advance	"J": Advance
4. CKP sensor	13. Oil pan	"B": Actual valve timing	"K": Retard
5. Crank position	14. Oil pump	"C": Feed back	"L": Valve overlap
6. CMP sensor #2	15. Oil filter	"D": Duty control	"M": 40° movable angle
7. Cam position signal	16. VVT actuator	"E": Rotation direction	
8. Cylinder temp. sensor	17. Valve lift	"F": Retard pressure	
9. Cylinder temp. signal	18. Crank angle	"G": Advance pressure	

OCV (Oil Control Valve)
The OCV is used to regulate oil flow and is installed on the lower camshaft housing.

Retard Operation
When the duty ratio of the ECM is small, the OCV spool valve is pushed away from the coil by spring force and engine oil pressure is applied to the retard chamber. Engine oil remaining in the advance chamber is drained out through the spool valve.

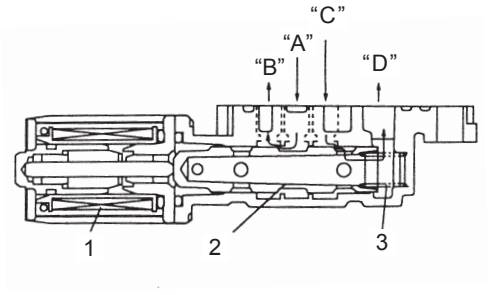

IEH511140010-03

1. Coil	"A": Engine oil pressure	"D": Drain
2. Spool valve	"B": To retard chamber	
3. Spring	"C": To advance chamber	

Advance Operation
When the duty ratio of the ECM is large, the spool valve is pulled towards the coil by magnetic force, compressing the spring and applying engine oil pressure to the advance chamber side.
Engine oil remaining in the retard chamber side is drained out through the spool valve.

Retaining Operation
When the duty ratio of the ECM is medium, the OCV coil' magnetic and return spring forces are equal. This positions the spool valve between the advance and retard chamber, closing both oil passages.

Intake Cam Timing Sprocket Assembly
Inside the intake cam timing sprocket assembly (VVT actuator), there are separate advance and retard chambers formed by a partition of the rotor.
The rotor moves inside the housing as engine oil pressure is applied to the advance or retard chamber. The intake cam timing sprocket is part of the sprocket housing assembly. Since the rotor and intake camshaft are bolted together, when the rotor moves inside the housing, a change of phase angle takes place in the relative position between the intake camshaft and intake cam timing sprocket. The rotor has a spring pressured lock pin which engages with the housing when spring force is greater than oil pressure, locking the rotor in the most retarded position. This prevents a change of phase angle between the intake camshaft and intake cam timing sprocket when the engine oil pressure is low at engine start.
When the engine is started and the engine oil pressure is applied to the advance chamber, the lock pin is forced up, compressing the return spring, releasing the rotor and allowing the VVT actuator to function.

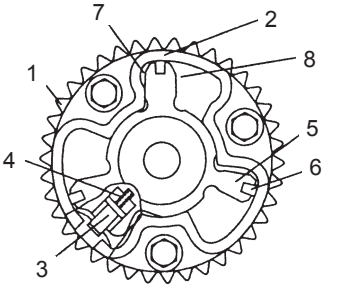

IEH511140011-03

1. Intake cam timing sprocket	5. Rotor
2. Housing	6. Seal
3. Lock pin	7. Advance chamber
4. Spring	8. Retard chamber

Component Location

Engine Control System Components / Engine Electrical Device Location

CENFH5111103001

Refer to “Wiring Harness Routing Diagram” in Section 4A (Page 4A-2).

Diagnostic Information and Procedures

ECM Power and Ground Circuit Check

CENFH5111104001

Wiring Diagram

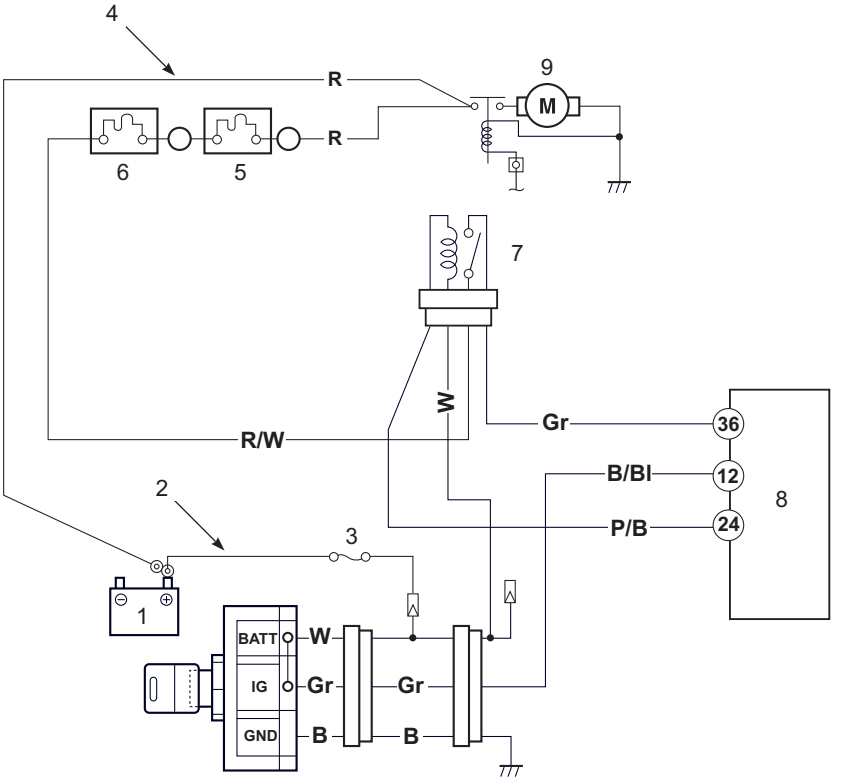

IFH511110004-02

1. Battery	4. Main battery cable	7. ECM main relay
2. Sub battery cable	5. Fuse (60 A)	8. ECM
3. Fuse (15 A)	6. Fuse (30 A)	9. Starter motor

Circuit Description

The ECM is battery dependent and must be provided with its own dedicated 12 V power supply. The electrical circuits which provide this supply are:

1) The sub battery cable to the white lead wire in the remote control extension harness to the ignition switch.
   When the ignition switch is turned ON, battery power passes from the white lead wire, through the ignition switch contacts to the gray output lead wire to the No.12 terminal of ECM.

NOTE

Ensure battery cable connections are clean and secure.
Failure at the battery connection will cause incorrect operation of the ECM and starter motor cranking system.

2) The engine wiring harness to the main relay. When the ECM main relay is energized by turning the ignition switch ON, a circuit is formed which supplies battery voltage to the No.36 terminal of ECM.

Troubleshooting

Step 1

Is operation of the main relay heard when the ignition switch is turned “ON”?

Yes Go to step 4.

No Go to step 2.

Step 2

Are the main fuses (60 A and 30 A, for ignition and ECM) and sub battery cable fuse (15 A) in good condition?

Yes Go to step 3.

No Replace.

Step 3

1) Disconnect the ECM connectors at the ECM with the ignition switch “OFF”.
2) Measure the voltage between the No.24 terminal of the ECM connector and body ground.

Is the voltage 12 V (Battery Voltage)?

Yes Go to step 4.

No
- Check the ECM main relay.
  Refer to “ECM Main Relay Inspection” (Page 1A-50).
- Poor ECM main relay connection.
- “P/B” wire open, shorted or poor connection.

Step 4

1) Turn the ignition switch “OFF”.
2) Connect the 36-pin test cord set between the ECM and the main wire harness.
3) Turn the ignition switch “ON”.
4) Measure the voltage between the No.12 terminal and body ground.

Is the voltage 12 V (Battery Voltage)?

Yes Go to step 5.

No
- Check the ignition switch.
  Refer to “Ignition Switch Inspection” in Section 1I (Page 1I-13).
- “Gr”, “B/Bl” wire open circuit or poor connection.

Step 5

1) Turn the ignition switch “OFF”.
2) Connect the 36-pin test cord set between the ECM and the main wire harness.
3) Turn the ignition switch “ON”.
4) Measure the voltage between the No.24 terminal and body ground.

Is the voltage approx. 0.8 V?

Yes Go to step 6.

No
- “P/B” wire open, shorted or poor connection.
- If the wiring and connection is OK, intermittent trouble or a faulty ECM may be the cause.

Step 6

1) Turn the ignition switch “ON”.
2) Measure the voltage between the No.36 terminal and body ground.

Is the voltage 12 V (Battery Voltage)?

Yes ECM power and ground circuit are in good condition.

No
- “Gr” wire open, shorted or poor connection.
- Faulty ECM main relay.

Troubleshooting with Self-Diagnostic Code

CENFH5111104002

⚠ WARNING

Before troubleshooting, read and follow the "Precautions on Engine Control Diagnosis" (Page 1A-1).

In this section, troubleshooting procedures are based on the assumption that the "low pressure fuel system" and "mechanical components (power unit, lower unit, etc.)" are normal.

Self-Diagnostic Code "3 – 4" MAP Sensor

CENFH5111104003

Wiring Diagram

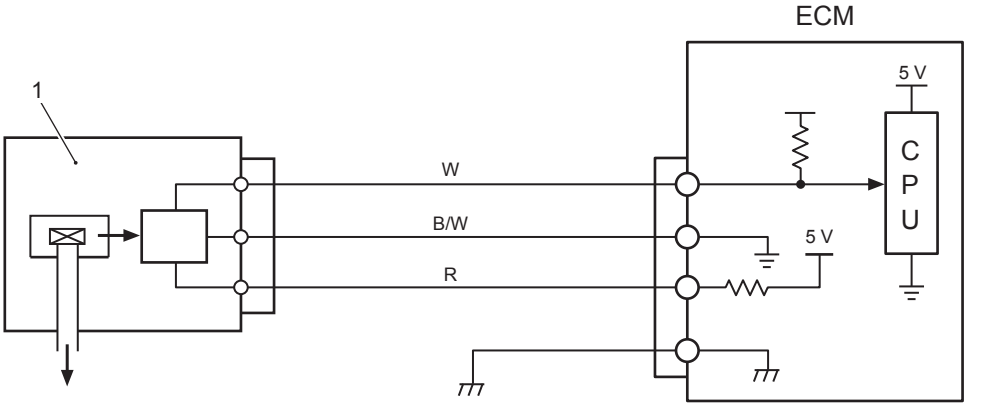

IEH511110028-01

1. MAP sensor

Troubleshooting

Step 1

1) Remove the fuel hose guard.
2) With the ignition switch "OFF", disconnect the MAP sensor connector.
3) With the ignition switch "ON", check the voltage at the "R" wire terminal of the MAP sensor connector.

Is the voltage approx. 4 – 5 V?

Yes — Go to step 2.

No
- "R" wire open, "R" wire shorted to ground or a poor wire connection.
- If the wiring and connection is OK, substitute a known-good ECM and recheck.

Step 2

1) Check the MAP sensor output voltage change. Refer to "MAP Sensor Output Voltage Inspection" in Section 1C (Page 1C-14).

Is it in good condition?

Yes
- Substitute a good ECM and recheck.

No
- Faulty MAP sensor.
- "R" wire shorted to "W" wire, "B/W" wire open, poor "B/W" wire connection, poor "W" wire connection, "W" wire open or poor MAP sensor connection.
- If the wiring and connection is OK, intermittent trouble or a faulty ECM may be the cause.

For step 1

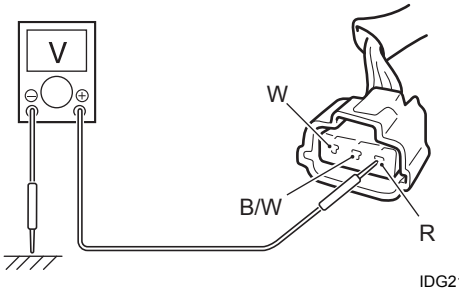

IDG211110010-02

Self-Diagnostic Code “1 – 4” Cylinder Temp. Sensor

CENFH5111104004

Wiring Diagram

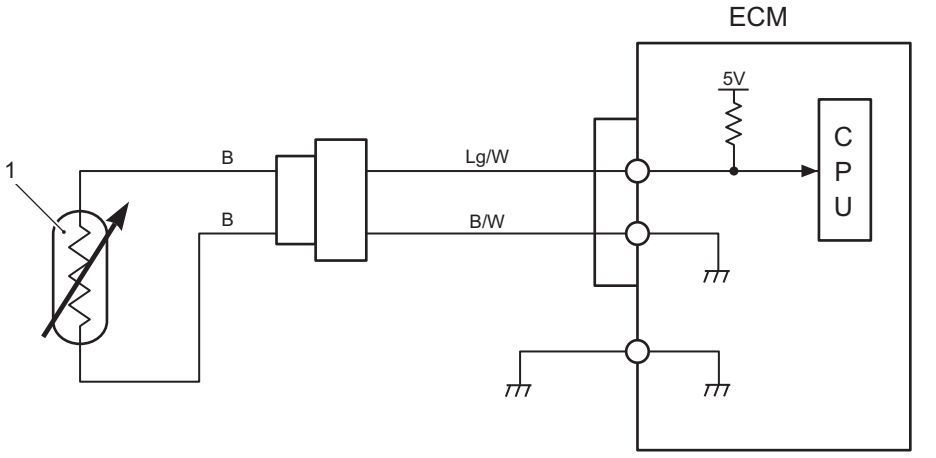

IFH511110005-01

1. Cylinder temp. sensor

Troubleshooting

Step 1

1) With the ignition switch “OFF”, disconnect the cylinder temp. sensor lead wire connector.
2) With the ignition switch “ON”, check the voltage at the “Lg/W” wire terminal of the cylinder temp. sensor connector.

Is the voltage 4 V or more?

Yes Go to step 2.

No
- “Lg/W” wire shorted to the “B/W” wire or ground circuit.
- If the wiring is OK, substitute a known-good ECM and recheck.

Step 2

1) Check the cylinder temp. sensor.
Refer to “Cylinder Temp. Sensor Inspection” in Section 1C (Page 1C-9).

Is it in good condition?

Yes Poor cylinder temp. sensor connection, intermittent trouble or a faulty ECM may be the cause.

No Faulty cylinder temp. sensor.

For step 1

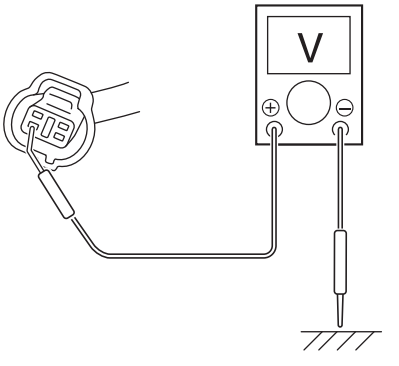

I9J011110045-02

Self-Diagnostic Code “2 – 3” IAT Sensor

CENFH5111104005

Wiring Diagram

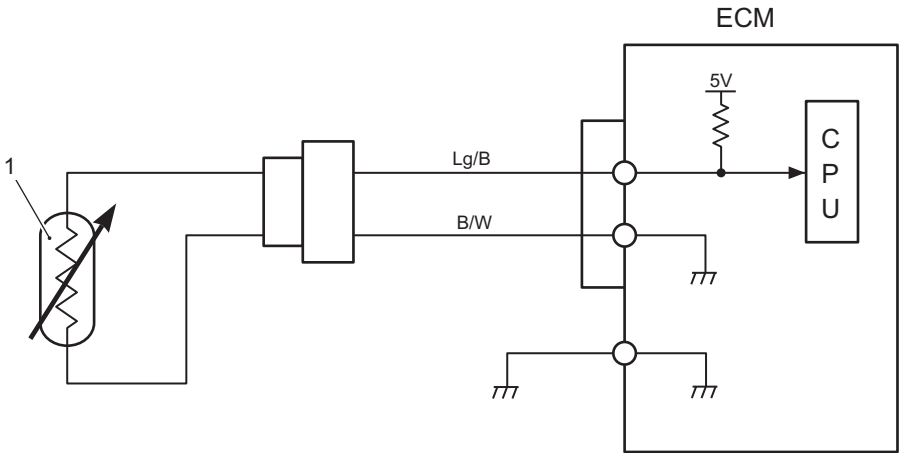

I9J011110024-03

1. IAT sensor

Troubleshooting

Step 1

1) With the ignition switch “OFF”, disconnect the IAT sensor connector.
2) With the ignition switch “ON”, check the voltage at the “Lg/B” wire terminal of the IAT sensor connector.

Is the voltage 4 V or more?

Yes — Go to step 2.

No
- “Lg/B” wire shorted to “B/W” wire or ground circuit.
- If the wiring is OK, substitute a known-good ECM and recheck.

Step 2

1) Check the IAT sensor.
   Refer to “IAT Sensor Inspection” in Section 1C (Page 1C-11).

Is it in good condition?

Yes — Poor IAT sensor connection, intermittent trouble or a faulty ECM may be cause.

No — Faulty IAT sensor.

For step 1

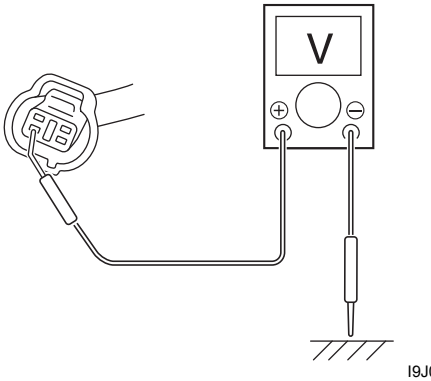

I9J011110046-01

Self-Diagnostic Code “1 – 5” Ex. Manifold Temp. Sensor

CENFH5111104006

Wiring Diagram

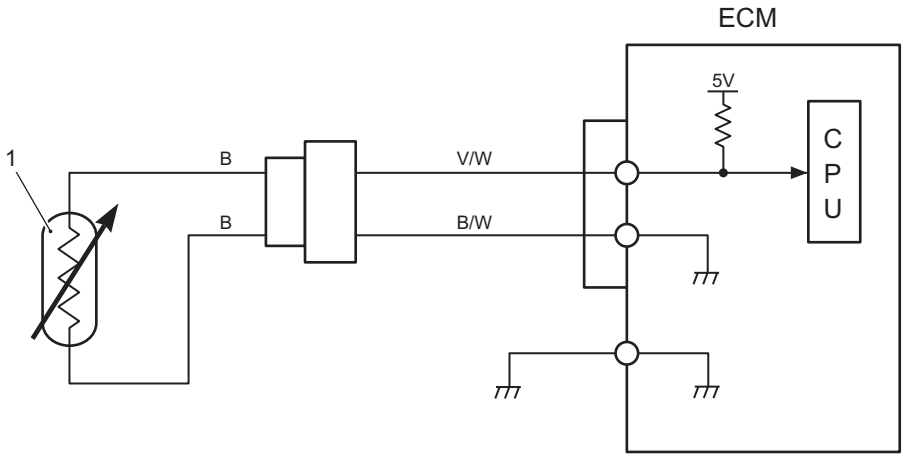

I9J011110030-02

1. Ex. manifold temp. sensor

Troubleshooting

Step 1

1) With the ignition switch “OFF”, disconnect the Ex. manifold temp. sensor lead wire connector.
2) With the ignition switch “ON”, check the voltage at the “V/W” wire terminal of the Ex. manifold temp. sensor connector.

Is the voltage 4 V or more?

Yes Go to step 2.

No
- “V/W” wire shorted to “B/W” wire or ground circuit.
- If the wiring is OK, substitute a known-good ECM and recheck.

Step 2

1) Check the Ex. manifold temp. sensor.
Refer to “Ex. Manifold Temp. Sensor Inspection” in Section 1C (Page 1C-10).

Is it in good condition?

Yes Poor Ex. manifold temp. sensor connection, intermittent trouble or a faulty ECM may be the cause.

No Faulty Ex. manifold temp. sensor.

For step 1

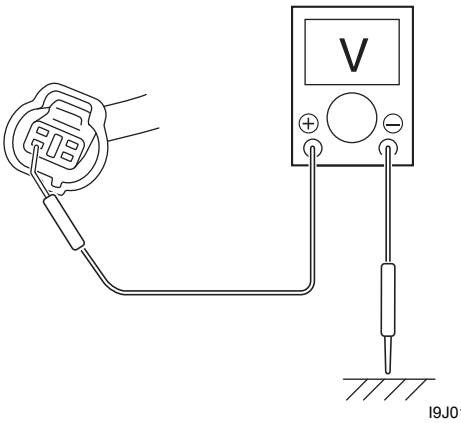

I9J011110049-01

Self-Diagnostic Code “3 – 7” Trim Sensor

CENFH5111104007

Wiring Diagram

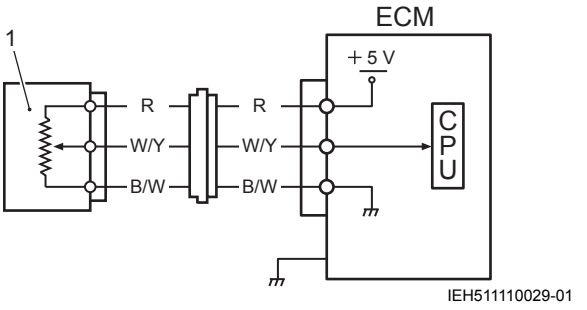

IEH511110029-01

1. Trim sensor

Troubleshooting

Step 1

1) With the ignition switch “OFF”, disconnect trim sensor connector.
2) With the ignition switch “ON”, check the voltage at the “R” wire terminal of trim sensor connector.

Is the voltage approx. 4 – 5 V?

Yes Go to step 2.

No
- “R” wire open, “R” wire shorted to ground circuit or poor wire connection.
- If the wire and connection is OK, substitute a known-good ECM and recheck.

Step 2

1) Check the trim sensor output voltage change.
   Refer to “Trim Sensor Inspection” in Section 1C (Page 1C-25).

Is it in good condition?

Yes Poor trim sensor connection, intermittent trouble or a faulty ECM.

No
- “R” wire shorted to “W/Y” wire, “B/W” wire open, poor “B/W” wire connection, poor “W/Y” wire connection, “W/Y” wire open or poor trim sensor connection.
- If the wire and connection is OK, intermittent trouble or a faulty ECM may be the cause.
- Faulty trim sensor.

For step 1

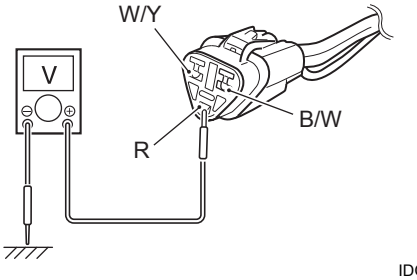

IDG211110015-04

Self-Diagnostic Code “2 – 1” TPS (Throttle Position Sensor)

CENFH5111104008

Wiring Diagram

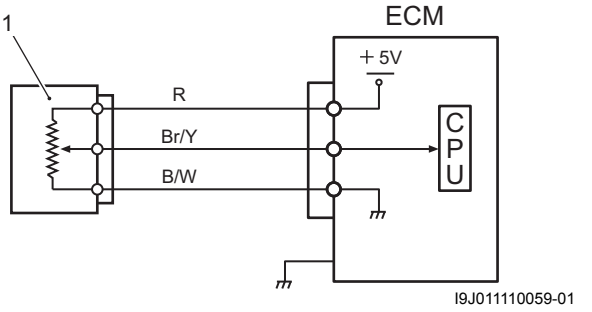

1. TPS

Troubleshooting

Step 1

1) Remove the fuel hose guard.
2) With the ignition switch “OFF”, disconnect the TPS connector.
3) With the ignition switch “ON”, check the voltage at the “R” wire terminal of the TPS connector.

Is the voltage approx. 4 – 5 V?

Yes — Go to step 2.

No
- “R” wire open, “R” wire shorted to ground circuit or poor connection.
- If the wiring and connection is OK, substitute a known-good ECM and recheck.

Step 2

1) Check the TPS output voltage change.
   Refer to “TPS Inspection” in Section 1C (Page 1C-21).

Is it in good condition?

Yes — Substitute a known-good ECM and recheck.

No
- Faulty TPS.
- “R” wire shorted to “Br/Y” wire, “B/W” wire open, poor “B/W” wire connection, poor “Br/Y” wire connection, “Br/Y” wire open or poor TPS connection.
- If the wiring and connection is OK, intermittent trouble or a faulty ECM may be the cause.

For step 1

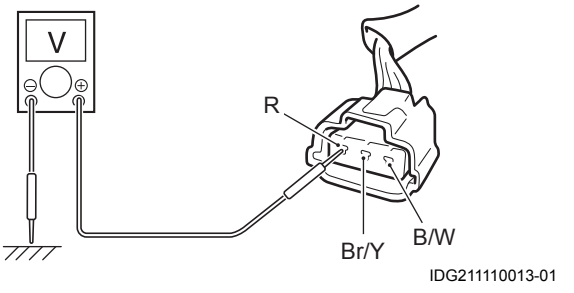

Self-Diagnostic Code “1 – 2” SPS (Shift Position Sensor)

CENFH5111104009

Wiring Diagram

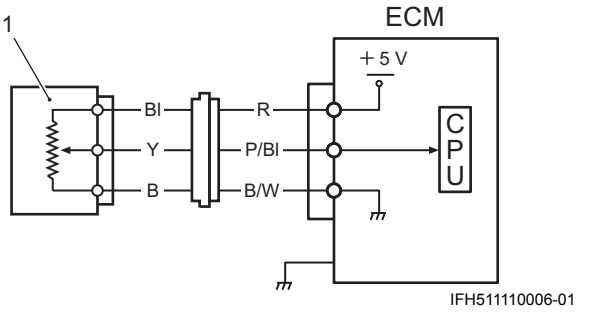

IFH511110006-01

1. SPS

Troubleshooting

Step 1

1) Remove lower side covers.
2) With the ignition switch “OFF”, disconnect the SPS lead wire connector.
3) With the ignition switch “ON”, check the voltage at the “R” wire terminal of the SPS lead wire connector.

Is the voltage approx. 4 – 5 V?

Yes — Go to step 2.

No
- “R” wire open, “R” wire shorted to ground circuit or poor connection.
- If the wiring and connection is OK, substitute a known-good ECM and recheck.

Step 2

1) Check the SPS output voltage change.
Refer to “Shift Position Sensor Inspection” in Section 1C (Page 1C-23).

Is it in good condition?

Yes — Poor shift position sensor connection, intermittent trouble or a faulty ECM may be the cause.

No
- Faulty SPS.
- “R” or “Bl” wire shorted to “P/Bl” or “Y” wire, “B/W” or “B” wire open, poor “B/W” or “B” wire connection, poor “P/Bl” or “Y” wire connection, “P/Bl” or “Y” wire open or poor SPS connection.
- If the wiring and connection is OK, intermittent trouble or a faulty ECM may be the cause.

For step 1

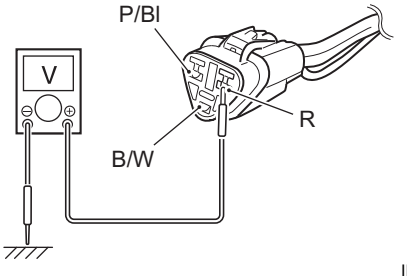

IFH511110007-01

Self-Diagnostic Code “1 – 1” Rectifier / Regulator (Over Charging)

CENFH5111104010

NOTE

- **This self-diagnostic code indication may be canceled when turning the ignition switch “ON” (engine not running), because ECM detects battery voltage.**
- **It is difficult to thoroughly check the rectifier/regulator. Before replacing it with new one, check that the ground point has good electrical contact.**

Troubleshooting

Step 1

1) Check the rectifier/regulator.
   Refer to “Rectifier / Regulator Inspection” in Section 1K (Page 1K-9).

Is the result OK?

Yes Go to step 2.

No Faulty rectifier/regulator.

Step 2

1) With the engine running, check charging voltage at idle speed.

Is the result 16 V or higher?

Yes Faulty rectifier/regulator.

No Faulty ECM or wire continuity/connection failure.

Self-Diagnostic Code “4 – 3” Fuel Injector

CENFH5111104011

Wiring Diagram

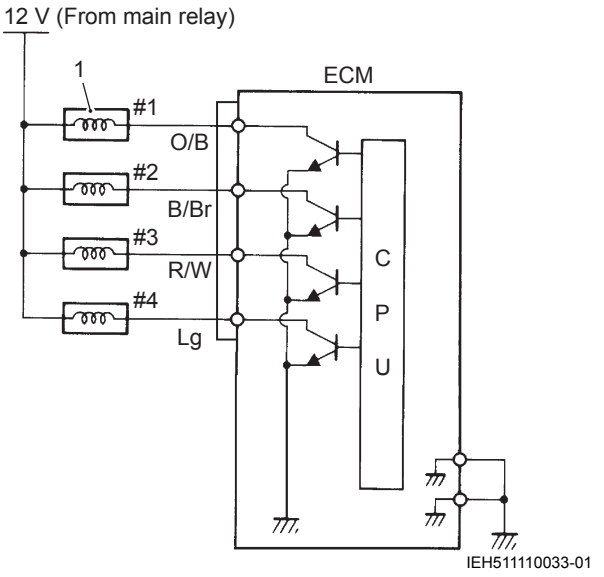

1. Fuel injector

Troubleshooting

Step 1

1) Using a sound scope, check that each injector has an operating sound when the engine is cranking.

Do all injectors make an operating sound?

Yes — Fuel injector and its circuit are in good condition.

No — Go to step 2.

Step 2

1) Check the fuel injector, the wiring connection and the wire harness of the fuel injector not making the operating sound.

Are all of the above OK?

Yes — Substitute a known-good ECM and recheck.

No
- Faulty injector or its circuit.
- Go to step 3.

Step 3

1) With the ignition switch “OFF”, disconnect the connectors from the fuel injectors.
2) Check the voltage at “Gr” wire terminal with the ignition switch “ON”.

Is the voltage 12 V (battery voltage)?

Yes — Go to step 4.

No — Power circuit open.

Step 4

1) Disconnect the ECM connectors with the ignition switch “OFF”, and check all of the injectors for resistance.
   Refer to “Resistance Check” in Section 1C (Page 1C-7).

Is the resistance 10 – 14 Ω for each injector?

Yes — Substitute a known-good ECM and recheck.

No — Faulty injector or its circuit.

For step 3

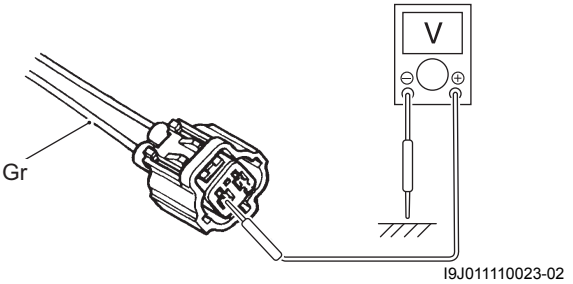

Self-Diagnostic Code “4 – 2” CKP Sensor

CENFH5111104012

Wiring Diagram

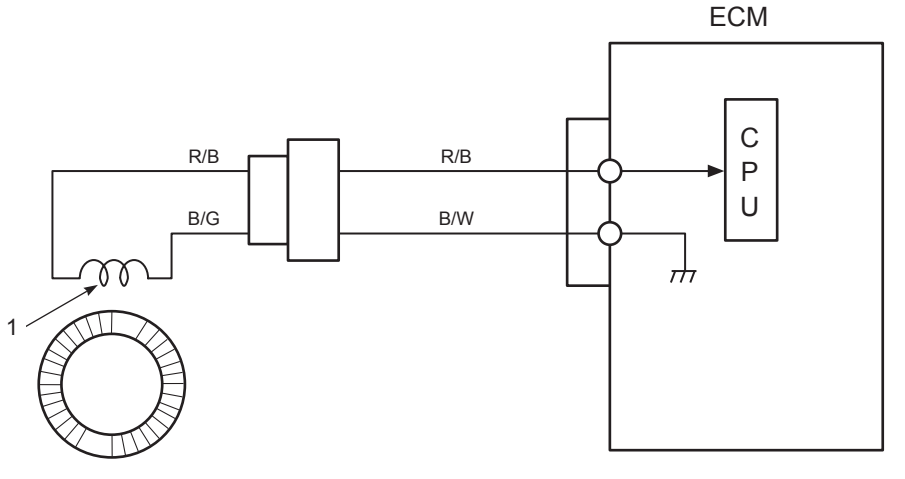

IEH511110034-02

1. CKP sensor

Troubleshooting

Step 1

1) Check the CKP sensor air gap.
Refer to “CKP Sensor Removal and Installation” in Section 1C (Page 1C-10).

Is it in good condition?

Yes Go to step 2.

No Incorrectly adjusted air gap.

Step 2

1) Check the CKP sensor resistance.
Refer to “Resistance Check” in Section 1C (Page 1C-7).

Is it in good condition?

Yes Open wire between the CKP sensor and the ECM, poor lead wire connection or sensor lead wires are shorted to each other. If lead wire and connection are OK, intermittent trouble or a faulty ECM may be the cause.

No Faulty CKP sensor.

Self-Diagnostic Code “2 – 4” CMP Sensor #1

CENFH5111104013

Wiring Diagram

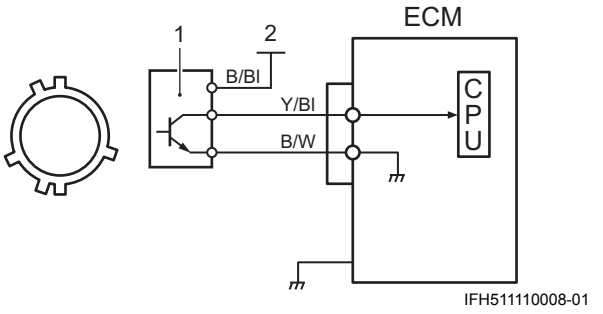

IFH511110008-01

1. CMP sensor #1	2. + 12 V (From ignition switch)

Troubleshooting

Step 1

Is the CMP sensor #1 installed properly and the wire harness connected securely?

Yes — Go to step 2.

No — Correct.

Step 2

1) With the ignition switch “OFF”, disconnect the connector from the CMP sensor #1.
2) Check for proper connection to the CMP sensor #1 at “B/Bl”, “Y/Bl” and “B/W” wire terminals.
3) If OK, turn the ignition switch “ON” and check the voltage at the “B/Bl”, “Y/Bl” and “B/W” wire terminals of the CMP sensor #1 connector.

CMP sensor #1 voltage
Terminal “B/Bl”: 10 – 14 V
Terminal “Y/Bl”: 4 – 5 V
Terminal “B/W”: 0 V

Is the voltage satisfactory?

Yes — Go to step 5.

No — Go to step 3.

Step 3

Was terminal “Y/Bl” voltage in step 2 within specification?

Yes — Go to step 4.

No — “Y/Bl” wire open or shorted to ground/ power supply circuit. If the wiring and connection is OK, substitute a known-good ECM and recheck.

Step 4

Was terminal “B/Bl” voltage in step 2 within specification?

Yes — Go to step 5.

No — “B/Bl” wire open circuit. If the wiring and connection is OK, substitute a known-good ECM and recheck.

Step 5

Check the CMP sensor #1 and sensor trigger vane. Refer to “CMP Sensor Inspection” in Section 1C (Page 1C-12).

Is check result satisfactory?

Yes — Substitute a known-good ECM and recheck.

No — Replace CMP sensor #1.

For step 2

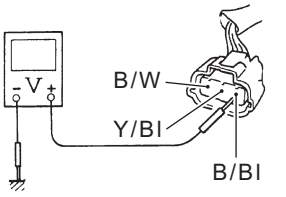

IFH511110009-01

Self-Diagnostic Code “2 – 6” CMP Sensor #2 (VVT)

CENFH5111104014

Wiring Diagram

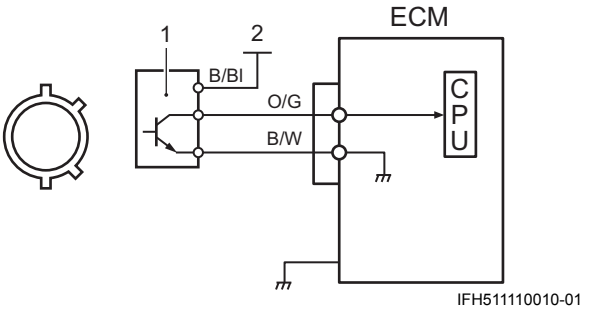

IFH511110010-01

1. CMP sensor #2	2. + 12 V (From ignition switch)

Troubleshooting

Step 1

Is the CMP sensor #2 installed properly and the wire harness connected securely?

Yes — Go to step 2.

No — Correct.

Step 2

1) With the ignition switch “OFF”, disconnect the connector from the CMP sensor #2.
2) Check for proper connection to the CMP sensor #2 at “B/Bl”, “O/G” and “B/W” wire terminals.
3) If OK, turn the ignition switch “ON” and check the voltage at the “B/Bl”, “O/G” and “B/W” wire terminals of the CMP sensor #2 connector.

CMP sensor #2 voltage
Terminal “B/Bl”: 10 – 14 V
Terminal “O/G”: 4 – 5 V
Terminal “B/W”: 0 V

Is the voltage satisfactory?

Yes — Go to step 5.

No — Go to step 3.

Step 3

Was terminal “O/G” voltage in step 2 within specification?

Yes — Go to step 4.

No — “O/G” wire open or shorted to ground/ power supply circuit. If the wiring and connection is OK, substitute a known-good ECM and recheck.

Step 4

Was terminal “B/Bl” voltage in step 2 within specification?

Yes — Go to step 5.

No — “B/Bl” wire open circuit. If the wiring and connection is OK, substitute a known-good ECM and recheck.

Step 5

Check the CMP sensor #2 and sensor trigger vane. Refer to “CMP Sensor Inspection” in Section 1C (Page 1C-12).

Is check result satisfactory?

Yes — Substitute a known-good ECM and recheck.

No — Replace CMP sensor #2.

For step 2

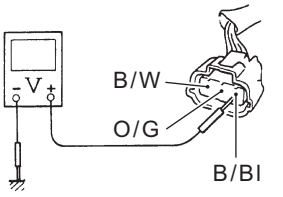

IFH511110011-01

Self-Diagnostic Code “2 – 2” Air Intake System

CENFH5111104015

Wiring Diagram

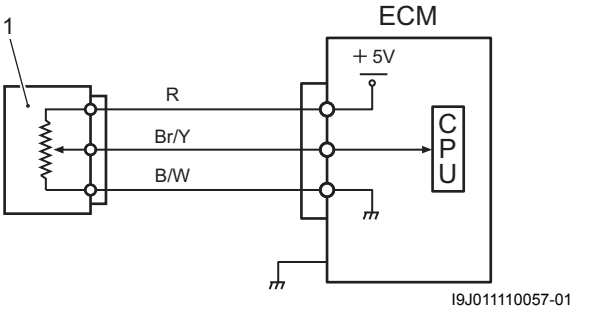

1. TPS

Troubleshooting

Step 1

1) Remove the fuel hose guard.
2) With the ignition switch “OFF”, disconnect the TPS connector.
3) With the ignition switch “ON”, check the voltage at the “R” wire terminal of TPS connector.

Is the voltage approx. 4 – 5 V?

Yes — Go to step 2.

No
- “R” wire open, “R” wire shorted to ground circuit or poor wire connection.
- If the wiring and connection is OK, substitute a known-good ECM and recheck.

Step 2

1) Check the TPS output voltage change. Refer to “TPS Inspection” in Section 1C (Page 1C-21).

Is it in good condition?

Yes — Go to step 3.

No
- Faulty TPS.
- “R” wire shorted to “Br/Y” wire, “B/W” wire open, poor “B/W” wire connection, poor “Br/Y” wire connection, “Br/Y” wire open or poor TPS connection.
- If the wiring and connection is OK, intermittent trouble or a faulty ECM may be the cause.

Step 3

1) Check the MAP sensor, IAC system and intake manifold (system) for air leakage.

Is the result OK?

Yes — Intermittent trouble or faulty ECM. Substitute a known-good ECM and recheck.

No — Faulty air intake system.

For step 1

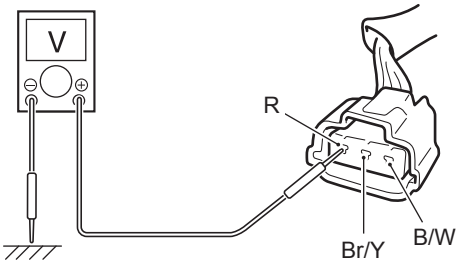

Self-Diagnostic Code “3 – 2” MAP Sensor 2

CENFH5111104016

Wiring Diagram

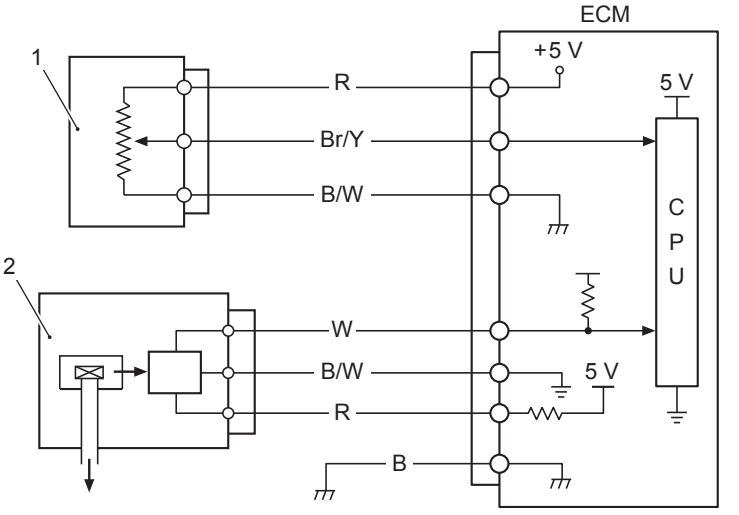

IDG211110032-01

1. TPS	2. MAP sensor

Troubleshooting

Step 1

1) Remove the fuel hose guard.
2) With the ignition switch “OFF”, disconnect the MAP sensor connector.
3) With the ignition switch “ON”, check the voltage at the “R” wire terminal of the MAP sensor connector.

Is the voltage approx. 4 – 5 V?

Yes Go to step 2.

No
- “R” wire open, “R” wire shorted to ground circuit or poor wire connection.
- If the wiring and connection is OK, substitute a known-good ECM and recheck.

Step 2

1) Check the MAP sensor output voltage change.
Refer to “MAP Sensor Output Voltage Inspection” in Section 1C (Page 1C-14).

Is it in good condition?

Yes Go to step 3.

No Faulty MAP sensor.

Step 3

1) With the ignition switch “OFF”, disconnect the TPS connector.
2) With the ignition switch “ON”, check the voltage at the “R” wire terminal of the TPS connector.

Is the voltage approx. 4 – 5 V?

Yes Go to step 4.

No
- “R” wire open, “R” wire shorted to ground circuit or poor wire connection.
- If the wiring and connection is OK, substitute a known-good ECM and recheck.

Step 4

1) Check the TPS output voltage change.
   Refer to “TPS Inspection” in Section 1C (Page 1C-21).

Is it in good condition?

Yes Intermittent trouble, substitute a known-good ECM and recheck.

No
- Faulty TPS.
- “R” wire shorted to “Br/Y” wire, “B/W” wire open, poor “B/W” wire connection, poor “Br/Y” wire connection, “Br/Y” wire open or poor TPS connection.
- If the wiring and connection is OK, intermittent trouble or a faulty ECM may be the cause.

For step 1

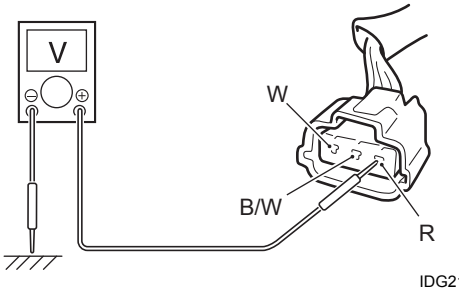

IDG211110010-02

For step 3

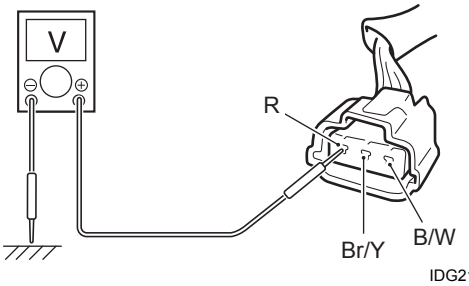

IDG211110013-01

Self-Diagnostic Code “3 – 3” Neutral Switch

CENFH5111104017

Wiring Diagram

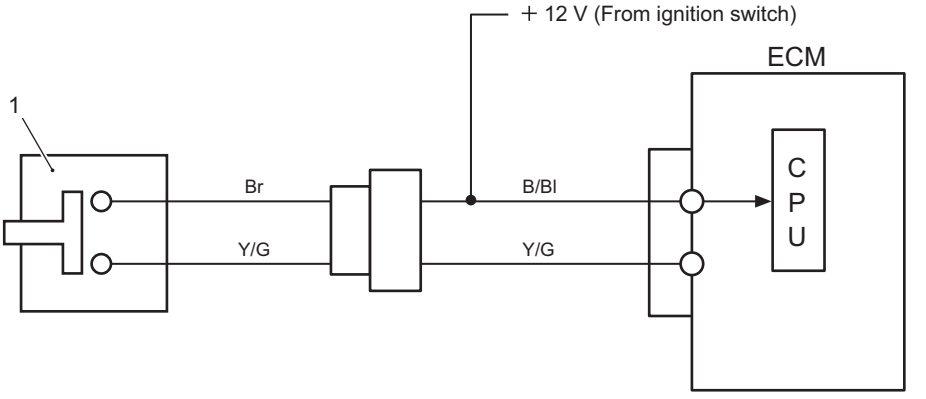

IFH511110012-03

1. Neutral switch

Troubleshooting

Step 1

1) Remove the lower side covers and front panel.
2) With the ignition switch “OFF”, disconnect the neutral switch connector.
3) With the ignition switch “ON”, check the voltage at the “B/Bl” wire terminal of the neutral switch connector.

Is the voltage 12 V or more?

Yes Go to step 2.

No
- “B/Bl” wire shorted to “Y/G” wire or ground circuit.
- If the wiring and connection is OK, substitute a known-good ECM and recheck.

Step 2

1) Check the neutral switch.
   Refer to “Neutral Switch Inspection” in Section 1I (Page 1I-16).

Is it in good condition?

Yes
- Poor neutral switch connection, intermittent trouble or a faulty ECM.
- Shift position sensor lever damage.

No Faulty neutral switch.

For step 1

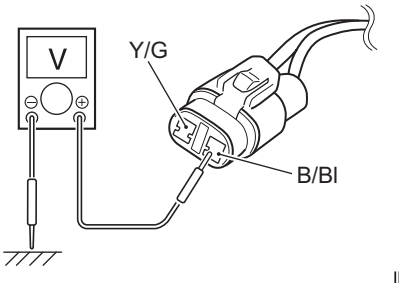

IFH511110013-02

Self-Diagnostic Code “5 – 1” VVT Advance

CENFH5111104018

Wiring Diagram

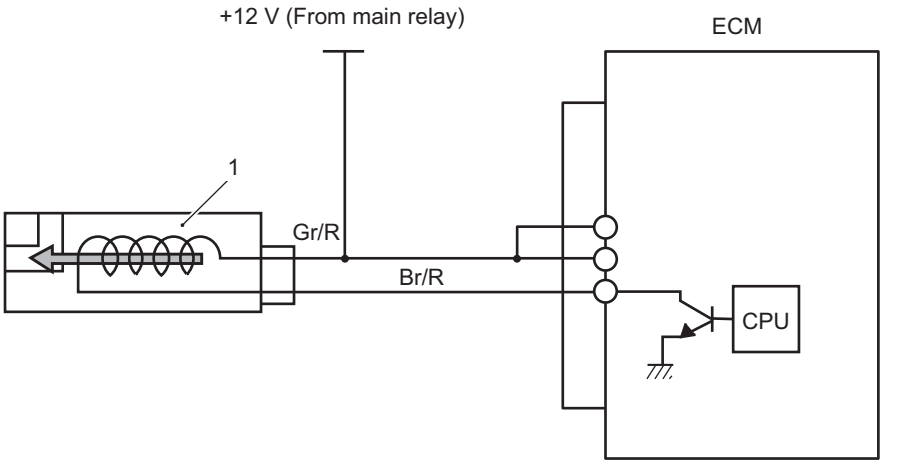

IFH511110014-01

1. OCV

Troubleshooting

Step 1

1) With the ignition switch “OFF”, disconnect the connector from OCV.
2) Check the voltage at “Gr/R” wire terminal with the ignition switch “ON”.

Is the voltage 12 V (battery voltage)?

Yes Go to step 2.

No
- Power circuit open.
- “Gr/R” wire shorted to “Br/R” wire or ground circuit.
- If the wiring and connection is OK, substitute known-good ECM and recheck.

Step 2

1) Inspect OCV and OCV gasket filter condition.
   Refer to “OCV (Oil Control Valve) Inspection” in Section 1C (Page 1C-18).

Is the result OK?

Yes
- Poor OCV connection, intermittent trouble or a faulty ECM.
- Clogged OCV oil passage.

No Faulty OCV.

Self-Diagnostic Code “5 – 3” Oil Pressure Switch

CENFH5111104019

Wiring Diagram

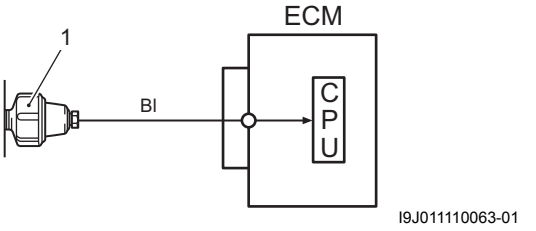

I9J011110063-01

1. Oil pressure switch

Troubleshooting

Step 1

1) With the ignition switch “OFF”, remove the oil pressure switch wire.
2) With the ignition switch “ON”, check the voltage between the oil pressure switch wire terminal and body ground.

Is the voltage approx. 5 V?

Yes Go to step 2.

No
- Oil pressure switch wire open or poor connection.
- If wire and connection are OK, substitute a known-good ECM and recheck.

Step 2

1) Check the oil pressure switch operation.
Refer to “Oil Pressure Switch Inspection” in Section 1E (Page 1E-8).

Is it in good condition?

Yes Poor oil pressure switch wire connection, intermittent trouble or a faulty ECM may be the cause.

No Faulty oil pressure switch.

For step 1

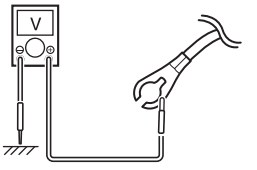

I9J011110064-01

Self-Diagnostic Code “6 – 1” OCV (Oil Control Valve)

CENFH5111104020

Wiring Diagram

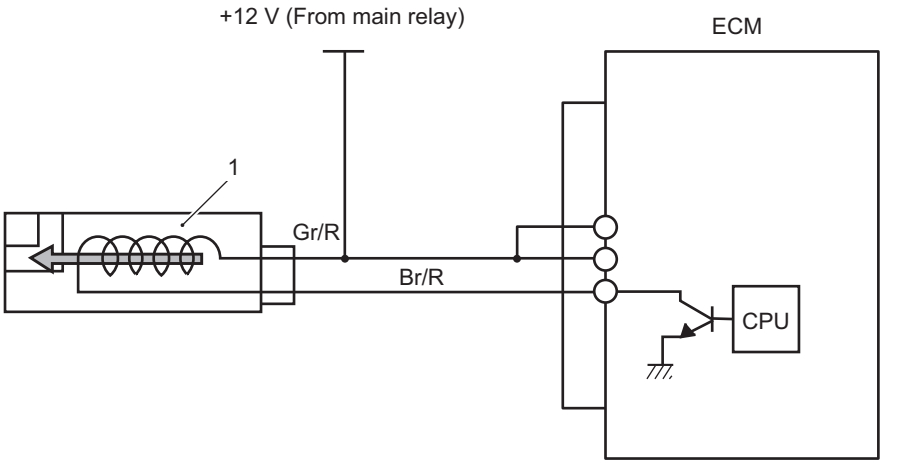

IFH511110014-01

1. OCV

Troubleshooting

Step 1

1) Inspect OCV.
Refer to “OCV (Oil Control Valve) Inspection” in Section 1D (Page 1D-20).

Is the result OK?

Yes — Poor OCV wire connection, intermittent trouble or a faulty ECM may be the cause.

No — Faulty OCV.

Self-Diagnostic Code “5 – 4” Knock Sensor

CENFH5111104030

Wiring Diagram

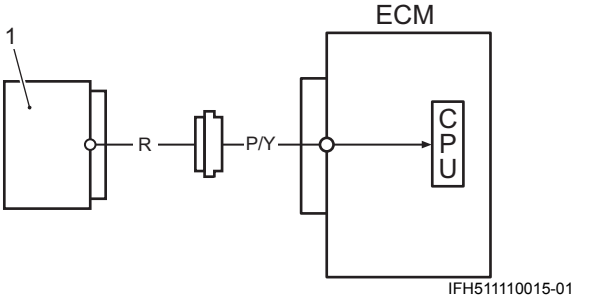

IFH511110015-01

1. Knock sensor

Troubleshooting

Step 1

1) Inspect knock sensor.
Refer to “Knock Sensor Inspection” in Section 1C (Page 1C-17).

Is it in good condition?

Yes — Poor knock sensor connection, intermittent trouble or a faulty ECM may be the cause.

No — Faulty knock sensor.

Self-Diagnostic Code “3 – 6” O2 Sensor

CENFH5111104031

Wiring Diagram

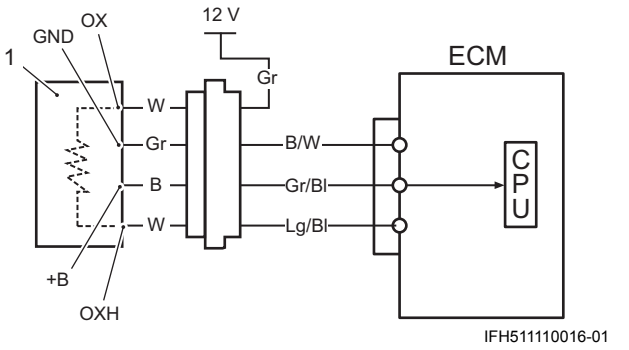

IFH511110016-01

1. O2 sensor

Troubleshooting

Step 1

1) With the ignition switch “OFF”, disconnect the O2 sensor connector.
2) Check continuity between Gr/Bl terminal of O2 sensor connector and ground, also between Gr/Bl and B/W terminals of O2 sensor connector. Make sure there are not continuity.
3) Disconnect ECM connectors. Refer to “ECM Removal and Installation” (Page 1A-50).
4) Check continuity between Gr/Bl terminal of O2 sensor connector (harness side) and No.3 terminal of ECM connector (harness side), also between B/W terminal and No.31 terminal. Make sure there are continuity.

Are they in good condition?

Yes — Go to step 2.

No — Gr/Bl wire shorted, or Gr/Bl or B/W wire open.

Step 2

1) Check the O2 sensor output voltage. Refer to “O2 Sensor Output Voltage Inspection” in Section 1C (Page 1C-15).

Is each voltage OK?

Yes — Poor O2 sensor connection, intermittent trouble or a faulty ECM may be the cause.

No — Faulty O2 sensor.

For step 1

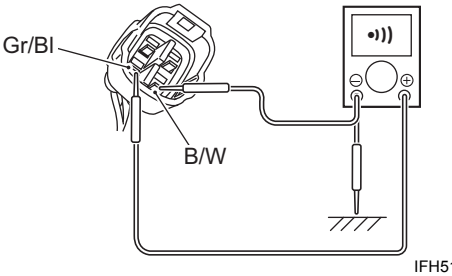

IFH511110017-01

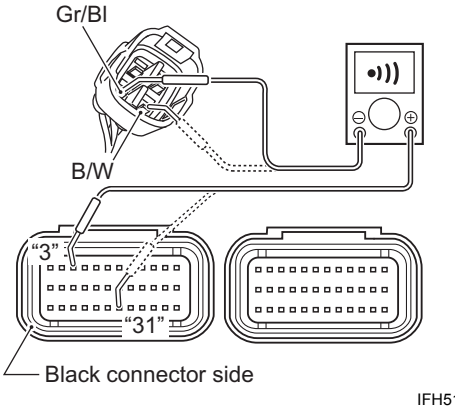

IFH511110018-05

Self-Diagnostic Code “6 – 3” O2 Sensor Heater

CENFH5111104032

Wiring Diagram

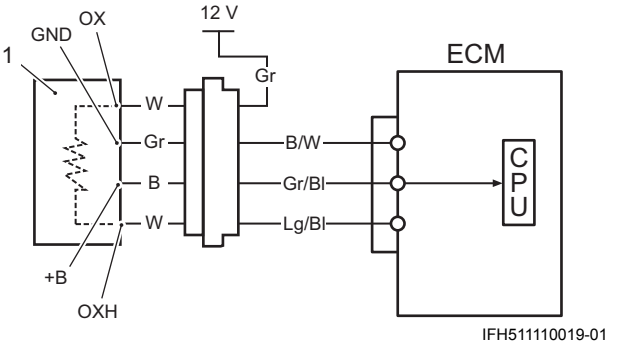

IFH511110019-01

1. O2 sensor

NOTE

Temperature of the sensor affects resistance value largely.

Make sure that the sensor heater is in atmospheric temperature.

Troubleshooting

Step 1

1) With the ignition switch “OFF”, disconnect the O2 sensor connector.
2) Measure the resistance between W terminals of O2 sensor.

Is the resistance 5.5 – 8.5 Ω at 20 °C (68 °F)?

Yes Go to Step 2.

No Faulty O2 sensor.

Step 2

1) Check the O2 sensor heater voltage.
   Refer to “O2 Sensor Heater Inspection” in Section 1C (Page 1C-16).

Is the voltage OK?

Yes
- Gr or Lg/Bl wire open or shorted to ground, or poor No.60 terminal connection.
- If wires and their connection are OK, intermittent trouble or a faulty ECM may be the cause.

No
- Gr or Lg/Bl wire shorted or open.
- Poor connection on O2 sensor or ECM connector.

For step 1

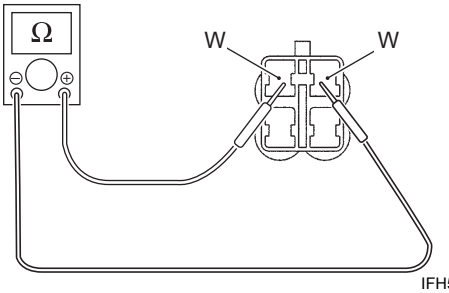

IFH511110024-01

Troubleshooting Without Self-Diagnostic Code

CENFH5111104029

Before troubleshooting, make sure that there is not a self-diagnostic code indication.

Condition	Possible cause	Correction / Reference Item
Unstable idling/trolling (or engine tends to stall)	Clogged MAP sensor vacuum passage.	*Check the vacuum passage.*
	Malfunctioning TPS.	*Check the TPS.*
	Faulty IAC system	*Check the IAC system.*
	Fuel pressure out of specification.	*Check the fuel pressure.*
	Faulty injector or its circuit.	*Check the injector and its circuit.*
	Poor performance of the IAT sensor, TPS or MAP sensor.	*Check each sensor.*
	Faulty ECM.	*Replace.*
	Faulty spark plug.	*Replace.*
	Faulty ignition coil or its circuit.	*Check the ignition coil and its circuit.*
	Faulty wire continuity / connection	*Correct or replace.*

IAC System Troubleshooting

CENFH5111104033

Wiring Diagram

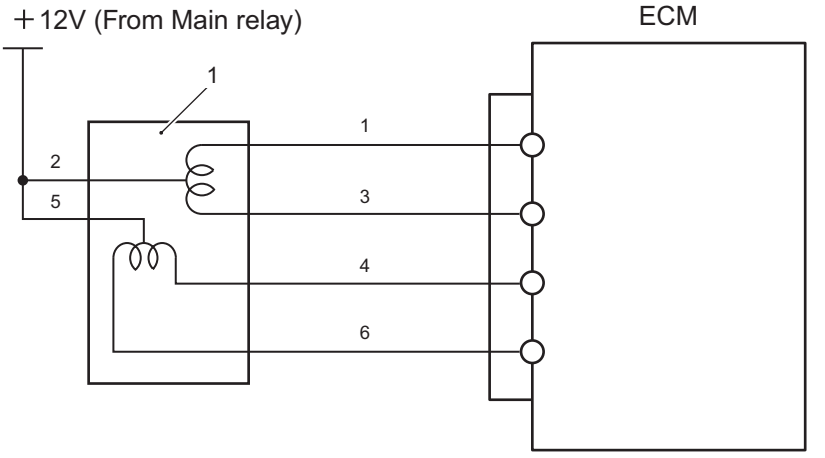

IFH511110026-01

1. IAC valve

Troubleshooting

Step 1

1) Warm up the engine to normal operating temperature and keep it idling.
2) Using the SDS tool, check the IAC duty cycle and idle speed.

   Idle speed (IAC duty cycle):
   600 – 700 r/min (approx. 10 – 20%)

Is result OK?

Yes IAC system is in good condition.

No Go to step 2.

Step 2

1) Disconnect the IAC connector at the IAC valve with ignition switch “OFF”.
2) Check the resistance between following terminals.
   / IAC “1” terminal – “2” terminal
   / IAC “3” terminal – “2” terminal
   / IAC “4” terminal – “5” terminal
   / IAC “6” terminal – “5” terminal

Is the resistance 25 – 34 Ω for each test?

Yes Proceed to “Unstable Idling/Trolling” in “Troubleshooting Without Self-Diagnostic Code” (Page 1A-44) and check items except for “Faulty IAC System”.

No
- Faulty IAC valve.
- Poor connection.
- Open wire harness.

For step2

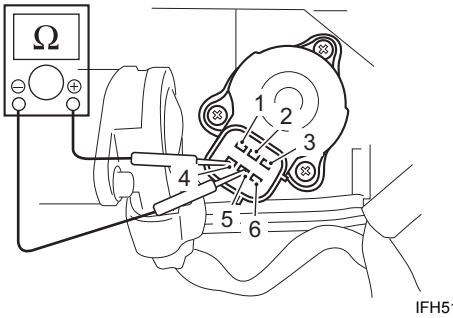

IFH511110025-01

Service Instructions

How to Use the 36-Pin Test Cord Set

CENFH5111106001

This test cord is used when checking a circuit for voltage, etc. and is connected between the ECM and the wiring harness.
To take a measurement, connect the tester probe to the relevant terminal of the test cord.

Special tool
TOOL (A): 09930–88730 (36-pin test cord set)

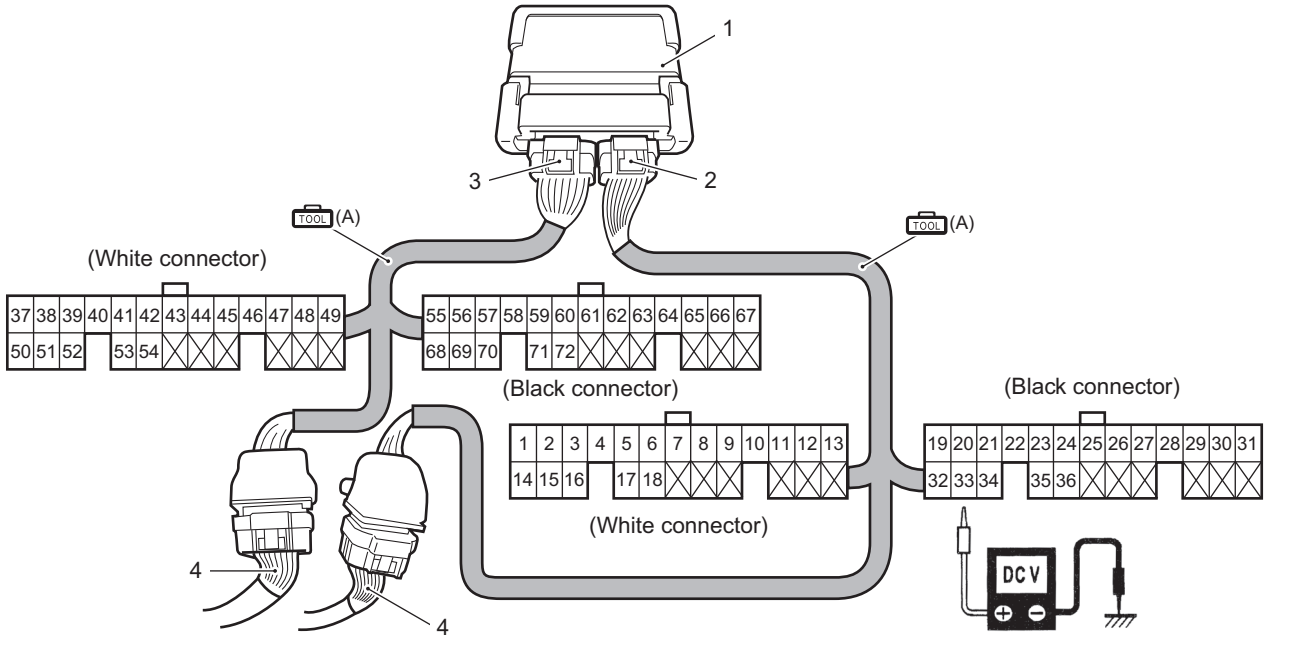

IFH511110020-02

1. ECM	2. Black connector side	3. Gray connector side	4. Wire harness

Inspection of the ECM and Its Circuit

CENFH5111106002

NOTICE

If you connect a voltmeter or ohmmeter directly to ECM terminals by removing ECM connector, you can damage the control module.

Never connect a voltmeter or an ohmmeter directly to any terminal of ECM by disconnecting control module connector.

Special tool

TOOL (A): 09930–88730 (36-pin test cord set)
TOOL : 09900–25008 (Multi circuit tester set)

Tester knob indication
DC Voltage (⎓)

1) Turn ignition switch OFF.
2) Connect the 36-pin test cord set between ECM and wire harness as shown in figure.
3) Turn ignition switch ON.
4) Connect the tester probe ("–", Black) to body ground, and measure the voltage according to the "ECM Circuit Voltage Table" (Page 1A-48).

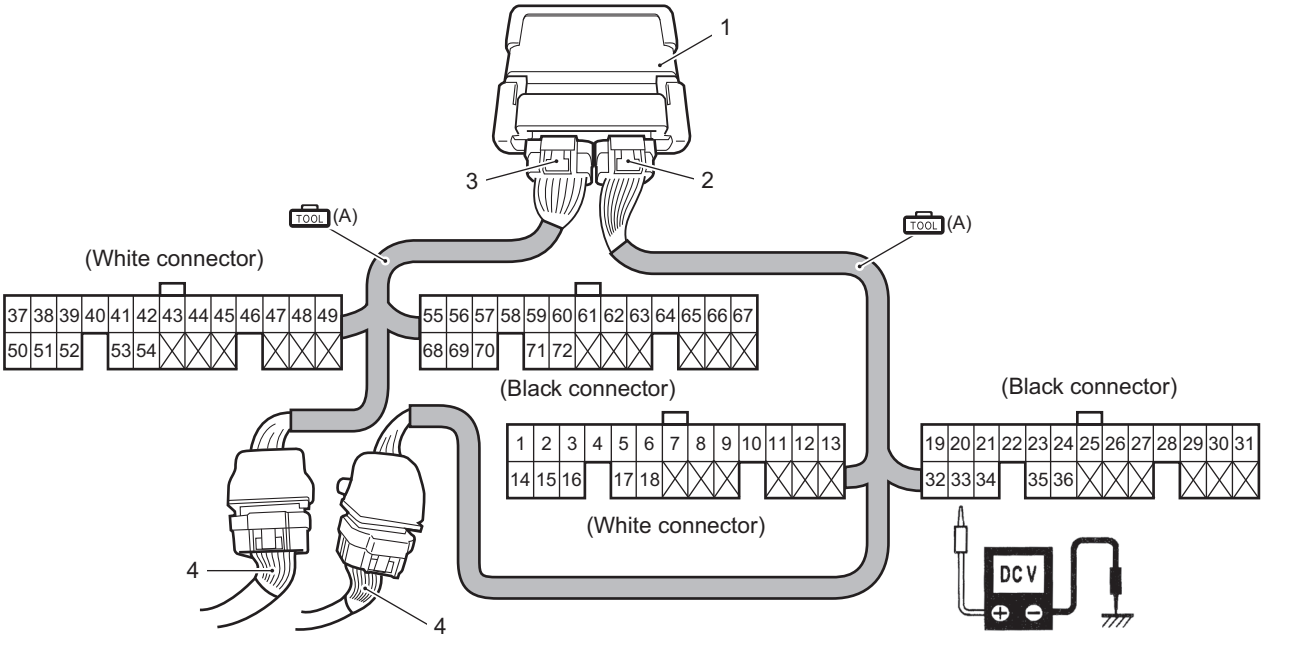

IFH511110021-01

1. ECM	2. Black connector side	3. Gray connector side	4. Wire harness

ECM Circuit Voltage Table

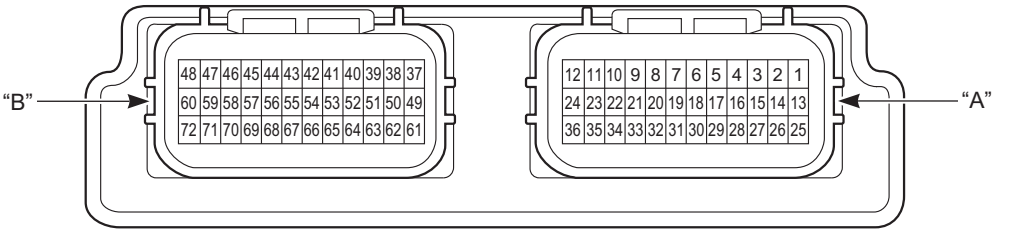

IFH511110035-01

"A": Black connector	"B": Gray connector

Terminal	Wire color	Circuit	Standard voltage	Condition/Remarks
1	Y/B	Tachometer	—	—
2	V	Troll mode switch	Approx. 12 V	Ignition switch "ON", troll mode switch "UP" side push.
			Approx. 2.6 V	Ignition switch "ON", troll mode switch free.
			Approx. 0 V	Ignition switch "ON", troll mode switch "DOWN" side push.
3	Gr/Bl	O2 sensor	Approx. 0 – 1 V	While engine idling after warming up.
			0.2 V or less	Engine stopped (ignition switch "ON").
4	R/B	CKP sensor	—	—
5	Br/Y	Throttle position sensor	Approx. 4.1 V	Ignition switch "ON", Throttle WOT.
			Approx. 0.7 V	Ignition switch "ON", Throttle FCT.
6	W	MAP sensor	0.2 – 4.5 V	Ignition switch "ON".
7	R	Power source for sensors	Approx. 5 V	Ignition switch "ON".
8	P/Bl	Shift position sensor	Approx. 2 V	Ignition switch "ON", shift into neutral.
			Approx. 4 V	Ignition switch "ON", shift into forward.
			Approx. 0.6 V	Ignition switch "ON", shift into reverse.
9	Bl/R	Emergency stop switch	Approx. 5 V	Ignition switch "ON", stop switch plate in.
			Approx. 0 V	Ignition switch "ON", stop switch plate out.
10	G	Starter relay control	Approx. 0.8 V	Ignition switch "ON", cranking.
			Approx. 12 V	Ignition switch "ON", Normal (Neutral).
			Approx. 0 V	Ignition switch "ON", Normal (Shift into Forward or Reverse).
11	Bl	Oil pressure switch	Approx. 5 V	While engine running.
			Approx. 0 V	Engine stopped (ignition switch "ON").
12	B/Bl	Power source No.2 for ECM	Approx. 12 V	Ignition switch "ON".
13	—	—	—	—
14	Lg/B	IAT sensor	0.1 – 4.6 V	Ignition switch "ON".
15	Lg/W	Cylinder temp. sensor	0.1 – 4.6 V	Ignition switch "ON".
16	—	—	—	—
17	V/W	EX. manifold temp. sensor	0.1 – 4.6 V	Ignition switch "ON".
18	—	—	—	—
19	O/W	Buzzer cancel	Approx. 12 V	Ignition switch "ON", key pushed in.
			Approx. 0 V	Ignition switch "ON", key not pushed in.
20	—	—	—	—
21	R/Bl	Water detection switch	Approx. 12 V	Ignition switch "ON", water detection switch "OFF".
			Approx. 0 V	Ignition switch "ON", water detection switch "ON".
22	P	PTT switch (DOWN)	Approx. 12 V	Ignition switch "ON", PTT switch "DN" depressed.
			Approx. 0 V	Ignition switch "ON", PTT switch not depressed.
23	Lbl	PTT switch (UP)	Approx. 12 V	Ignition switch "ON", PTT switch "UP" depressed.
			Approx. 0 V	Ignition switch "ON", PTT switch not depressed.
24	P/B	Ground for ECM main relay	Approx. 12 V	Ignition switch "OFF".
			Approx. 0.8 V	Ignition switch "ON".

Terminal	Wire color	Circuit	Standard voltage	Condition/Remarks
25	—	—	—	—
26	P	PTT relay (DOWN)	Approx. 0 V	PTT switch not depressed.
			Approx. 12 V	PTT switch “DN” depressed.
27	Lbl	PTT relay (UP)	Approx. 0 V	PTT switch not depressed.
			Approx. 12 V	PTT switch “UP” depressed.
28	W/Y	Trim and tilt sensor	0.2 – 4.0 V	Ignition switch “ON”.
29	—	—	—	—
30	—	—	—	—
31	B/W	Ground for sensors	—	—
32	Br	Starter switch	Approx. 2.5 V	Ignition switch “ON”.
			Approx. 12 V	Ignition switch “START” position.
33	Y/G	Neutral switch	Approx. 12 V	Ignition switch “ON”, shift into neutral.
			Approx. 0 V	Ignition switch “ON”, shift into forward or reverse.
34	O/Y	PC Communication line (A)	—	—
35	Y	PC Communication line (B)	—	—
36	Gr	Power source No.1 for ECM	Approx. 12 V	Ignition switch “ON”.
37	—	—	—	—
38	W/Bl	IAC valve No.4	Approx. 0 V or 12 V	Ignition switch “ON”.
39	Lg	No.4 fuel injector	Approx. 12 V	Ignition switch “ON”.
40	—	—	—	—
41	O/B	No.1 fuel injector	Approx. 12 V	Ignition switch “ON”.
42	—	—	—	—
43	B/Br	No.2 fuel injector	Approx. 12 V	Ignition switch “ON”.
44	Br/R	OCV	Approx. 12 V	Ignition switch “ON”.
45	—	—	—	—
46	R/W	No.3 fuel injector	Approx. 12 V	Ignition switch “ON”.
47	R/Y	IAC valve No.2	Approx. 0 V or 12 V	Ignition switch “ON”.
48	—	—	—	—
49	Gr/G	VSV	Approx. 12 V	Ignition switch “ON”.
50	O/Bl	IAC valve No.3	Approx. 0 V or 12 V	Ignition switch “ON”.
51	—	—	—	—
52	—	—	—	—
53	Lg/R	No.4 ignition coil	Approx. 0 V	Ignition switch “ON”.
54	Bl/Y	No.2 ignition coil	Approx. 0 V	Ignition switch “ON”.
55	B	Ground for power	—	—
56	P/Y	Knock sensor	Approx. 2.5 V	Ignition switch “ON”.
			Approx. 2.5 V	While engine running at idle speed.
57	Bl/W	Buzzer	—	—
58	W/Y	Trim gauge	—	—
59	W/B	IAC valve No.1	Approx. 0 V or 12 V	Ignition switch “ON”.
60	Lg/Bl	O2 sensor heater	Approx. 12 V	Engine stopped (ignition switch “ON”).
			Approx. 0 V	While engine running, after engine warmed up.
61	B	Ground for ECM	—	—
62	G/W	CHECK ENGINE lamp	—	—
63	G/Y	TEMP lamp	—	—
64	Bl/B	Oil lamp	—	—
65	P/W	REV-LIMIT lamp	—	—
66	Gr/Y	No.3 ignition coil	Approx. 0 V	Ignition switch “ON”.
67	B	Ground for power	—	—
68	O	No.1 ignition coil	Approx. 0 V	Ignition switch “ON”.
69	Y/Bl	CMP sensor No.1	Approx. 0.3 V or 5 V	Ignition switch “ON”.
70	O/G	CMP sensor No.2	Approx. 0.3 V or 5 V	Ignition switch “ON”.
71	—	—	—	—
72	B/R	High pressure fuel pump	Approx. 0 V	• Stop switch plate in, shift into neutral, for 3 sec. after ignition switch “ON”. • While engine running.
			Approx. 12 V	Engine stopped, ignition switch “ON”, stop switch plate “IN”, shift into neutral.

ECM Main Relay Inspection

CENFH5111106005

Inspect the ECM main relay using the following procedures:

1) Turn the ignition switch “OFF”.
2) Disconnect the ECM main relay (1) from the fuse box.

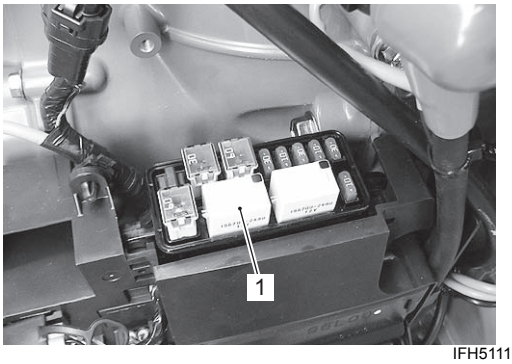

IFH511110032-01

1. ECM main relay

3) Check continuity between terminal (2) and (3) each time 12 V power supply is applied to terminal (4) and (5).
Connect the positive (+) lead to terminal (5), and negative (–) lead to terminal (4).

NOTICE

If the 12 V power supply wire is connected to wrong terminal or touched to each other, the power supply wire, tester may be damaged.

Be careful not to touch 12 V power supply wires to each other or with other terminals.

Special tool
TOOL (A): 09900–25008 (Multi circuit tester set)

Tester knob indication
Continuity (•))))

ECM main relay function

	Continuity
12 V power applied	**Yes**
12 V power not applied	**No**

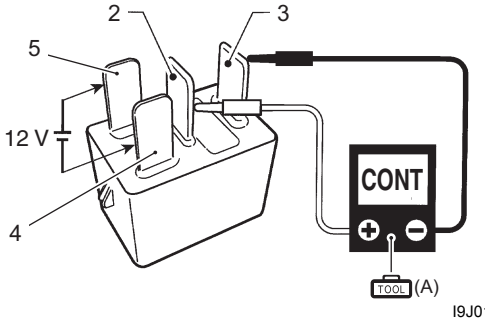

I9J011110038-02

4) Measure the resistance between relay terminals (4) and (5).
If out of specification, replace ECM main relay.

Tester knob indication
Resistance (Ω)

ECM main relay solenoid coil resistance
Standard: 145 – 190 Ω

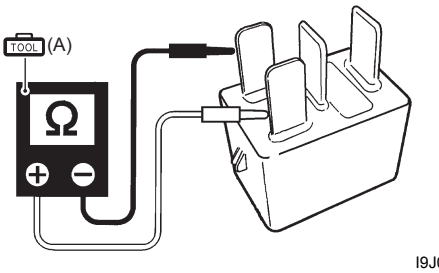

I9J011110039-01

ECM Removal and Installation

CENFH5111106006

Removal

1) Turn the ignition switch “OFF”.
2) Remove the lower side covers.
Refer to “Lower Side Cover Removal and Installation” in Section 2A (Page 2A-3).
3) Disconnect lead wire connectors (1) from ECM, then remove ECM (2).

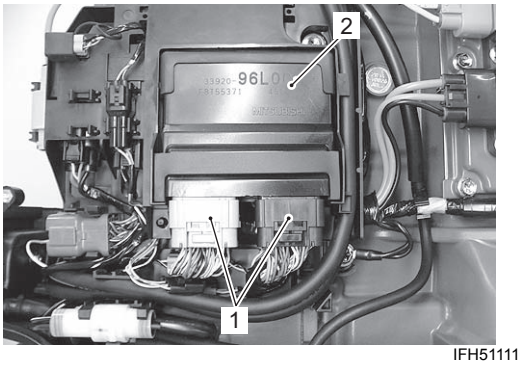

IFH511110033-01

Installation
Installation is reverse order of removal.

Engine Electrical Devices

Precautions

Precaution for Engine Electrical Device

CENFH5111300001

Refer to “General Precautions” in Section 00 (Page 00-1) and “Precautions on Engine Control Diagnosis” in Section 1A (Page 1A-1).

General Description

Sensor and Switch Description

CENFH5111301001

CKP Sensor

- There is one CKP sensor installed below the flywheel rotor.
  When the reluctor bars on the flywheel pass the sensor, a signal (voltage pulse) is generated and sent to the ECM.
  This is the fundamental signal used to judge engine speed and crankshaft angle.
- There are 32 reluctor bars. They are located 10 degrees apart, except at two positions where they are 30 degrees apart.
  During one crankshaft rotation, 32 signals are input to the ECM.
- **Failure symptom:**
  Without the CKP sensor signal input, the ECM does not output the ignition and fuel injection signals.

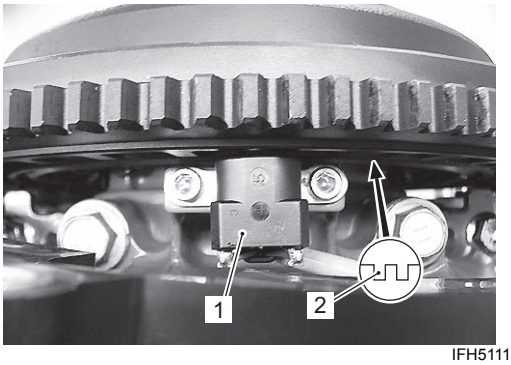

IFH511130024-02

1. CKP sensor	2. Reluctor bar

CMP Sensor #1

- CMP sensor #1 is mounted on the cylinder head cover with trigger vanes pressed onto the end of the exhaust camshaft.
  This sensor detects piston position.
- Signals received from this sensor are also used by the ECM to determine sequential fuel injection and ignition control.
- The 12 V power to the CMP sensor is supplied through the Ign. (Gr) line of the ignition switch.



IFH511130056-02

1. CMP sensor #1

- The CMP sensor is a GMR (Giant Magnet Resistive) semiconductor type sensor.
  The GMR semiconductor has the property of varying the electrical resistance depending on the intensity of the magnetic force applied.
  When the line of magnetic force from the magnet to the GMR semiconductor is increased or decreased, the electrical resistance of the GMR semiconductor will change. The changes in resistance as the magnets pass create the sensors waveform.
  When a trigger vane on the camshaft reluctor aligns with the sensors internal magnet, the electrical resistance of the GMR will decrease.
  When a trigger vane moves away from the sensor, the electrical resistance of the GMR will increase.
  When the GMR semiconductor voltage becomes higher than the standard value, the sensors signal will be lower. And when the voltage becomes lower than the standard value, the sensors signal will be higher.

- The six camshaft trigger vanes provide six high voltage signals from the CMP sensor to the ECM during one camshaft rotation (two rotations of crankshaft).

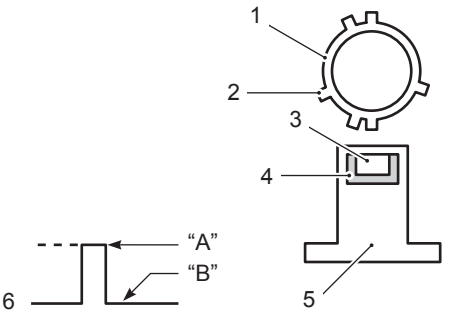

IEH511130109-02

1. Camshaft	5. CMP sensor
2. Trigger vane	6. Signal
3. Magnet resistive semiconductor	"A": High voltage
4. Magnet	"B": Low voltage

- **Failure symptom:**
  Without the CMP sensor signal input, the ECM does not output the ignition and fuel injection signals.

ECM cylinder identification

Cylinders are identified by a calculation combined from two signals; one from the CKP sensor and one from the CMP sensor.

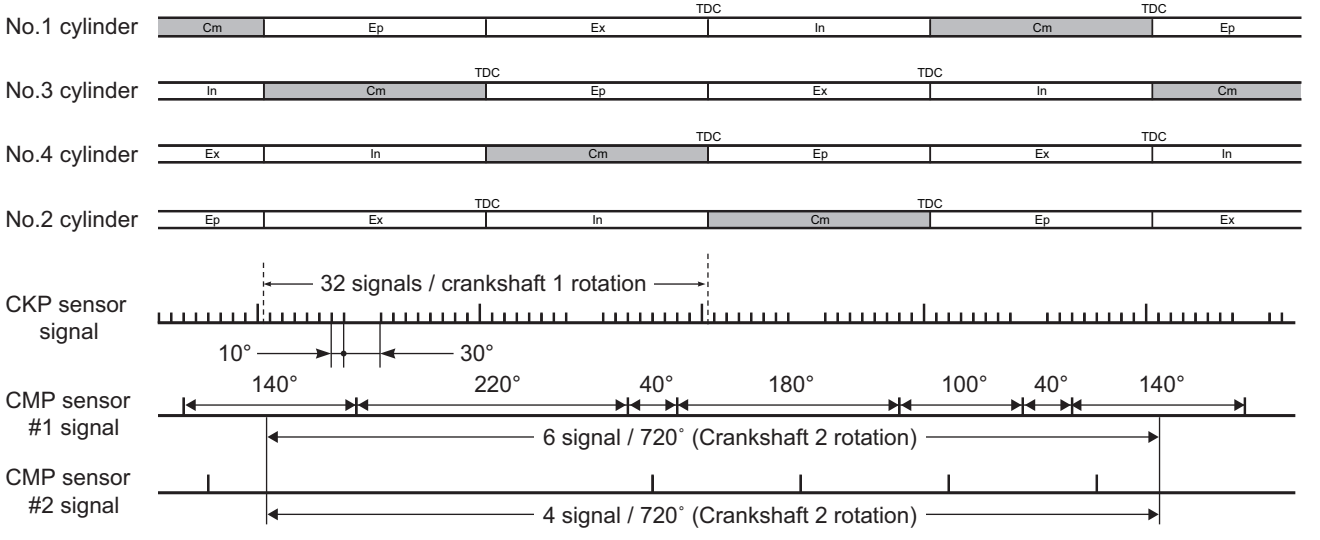

Cm.: Compression, Ep.: Explosion, Ex.: Exhaust, In.: Intake, TDC: Top Dead Center

IFH511130025-02

CMP Sensor #2

- CMP sensor #2 is mounted on the cylinder head cover with trigger vanes pressed onto the end of the intake camshaft.
  This sensor detects camshaft position.
- This sensor is the same type as the CMP sensor #1, and inputs signals to ECM. This signal is used to control intake camshaft valve timing through OCV (Oil control valve).

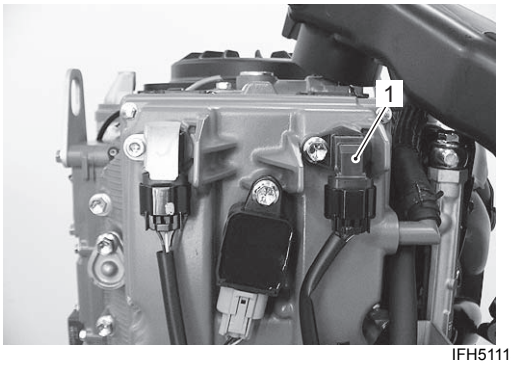

IFH511130057-02

1. CMP sensor #2

Cylinder Temperature Sensor

The cylinder temperature sensor is installed on the cylinder (top side) and used to detect the cylinder temperature.
This is a thermistor type sensor (resistance of which changes depending on temperature) and inputs a signal to the ECM as a voltage value. This signal is used to compensate the fuel injection time duration, ignition timing, etc.
This sensor is also used to detect engine over-heat as the ECM detects both the temperature and temperature change gradient (temperature rise vs time).

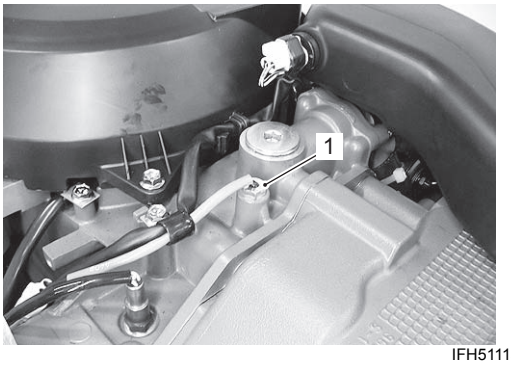

IFH511130026-02

1. Cylinder temp. sensor

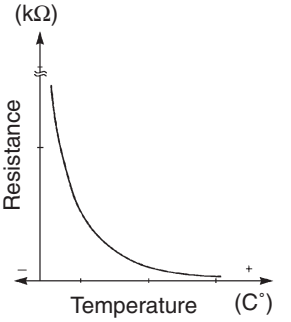

IEH511130007-01

Exhaust Manifold Temperature Sensor

The exhaust manifold temperature sensor is installed on the exhaust manifold and used to detect exhaust manifold temperature.
This sensor is the same type as the cylinder temperature sensor, and inputs a signal to the ECM as a voltage value.
This signal is also used to detect engine over-heat.

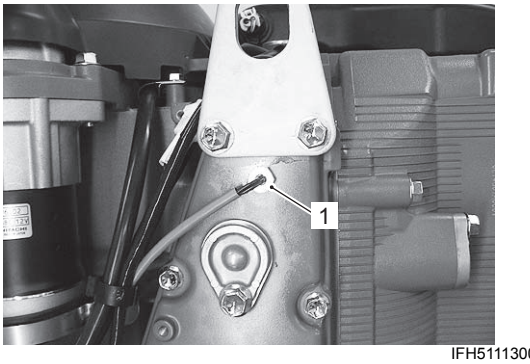

IFH511130027-02

1. EX. manifold temp. sensor

IAT (Intake Air Temperature) Sensor

The IAT sensor is installed on the air intake silencer case and used to detect the intake air temperature.
This sensor is the same type as the cylinder temperature sensor, and inputs a signal to the ECM as a voltage value.
This signal is used to compensate the fuel injection time duration.

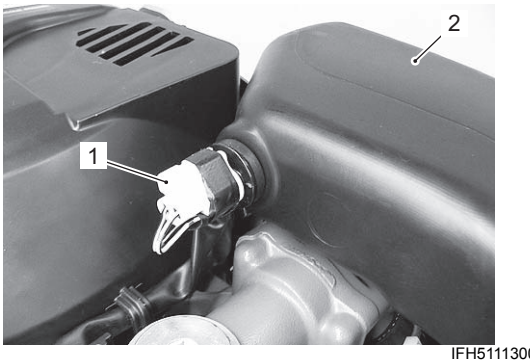

IFH511130028-02

1. IAT sensor	2. Air intake silencer case

MAP (Manifold Absolute Pressure) Sensor
The MAP sensor is installed on the intake manifold and used to detect the intake manifold pressure.
This sensor inputs the intake manifold pressure to the ECM as a voltage value.
This input signal is used as the fundamental signal to determine fuel injection time duration, ignition timing, VVT system control, etc.

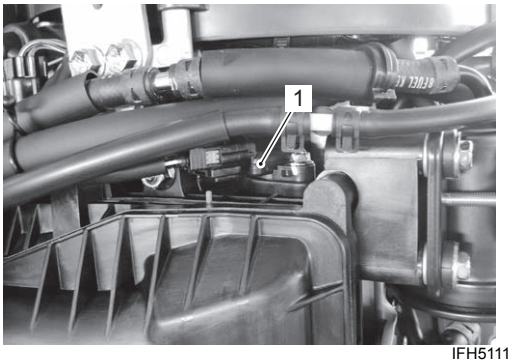

IFH511130029-01

1. MAP sensor

TPS (Throttle Position Sensor)
The TPS is installed on the throttle body and detects the degree of throttle opening. The throttle shaft is interlocked with the TPS shaft.
This sensor is a variable resistor, changing resistance (Ohms) in accordance with the throttle opening.
The varying resistance value is converted to voltage and input to the ECM.
Based on the TPS voltage, the ECM calculates the idle position and throttle opening and determines the control modes of the various controls systems (Idle air control, VVT system control, fuel injection control system, etc.).

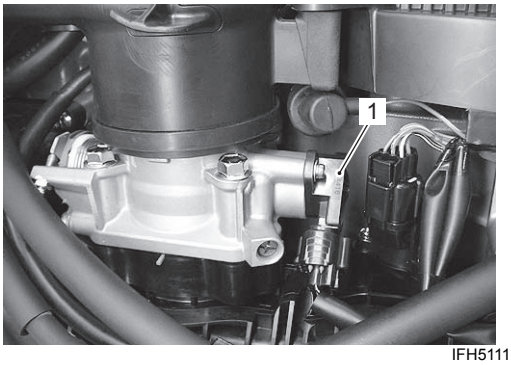

IFH511130030-02

1. TPS

Neutral Switch
The neutral switch is installed on the clutch lever holder and used to detect the shift position.
This switch is “ON” in neutral and “OFF” in forward or reverse.
Based on the switch’ shift position signal input, the ECM performs the following controls:

- When the shift is in forward or reverse at the time of engine start, no power is supplied to starter motor relay preventing starter motor engagement.
  Refer to “Start-In-Gear Protection System Description” in Section 1I (Page 1I-2).

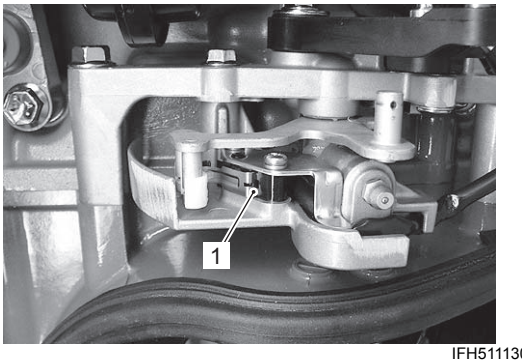

IFH511130031-02

1. Neutral switch

SPS (Shift Position Sensor)
The SPS is installed on the throttle lever holder and detects the shift position with the clutch lever operation interlocked.
This sensor is a variable resistor that changes resistance (ohms) in accordance with the shift position.
The varying resistance value is converted to voltage and input to the ECM.
Based on the SPS voltage, the ECM calculates and determines the change of shift position and executes the following controls.

- When the shift is in neutral, fuel injection is controlled to prevent engine speed from exceeding 3 000 r/min.
- After shifting into forward or reverse from neutral, the IAC valve is controlled to increase intake air to prevent unstable engine idle or stalling.

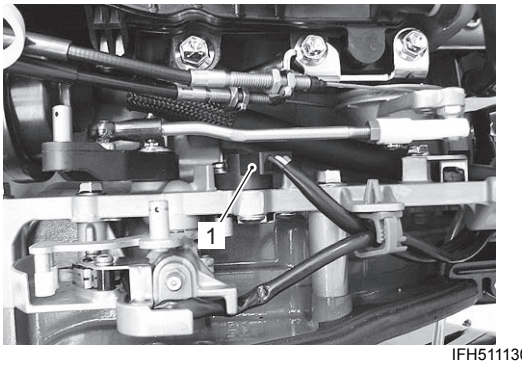

IFH511130032-02

1. SPS

Knock Sensor

Knock sensor uses a piezoelectric ceramics element which converts engine vibration into voltage signals and detects knocking from them.
Receiving signals from the knock sensor, ECM controls the ignition timing to prevent knocking.

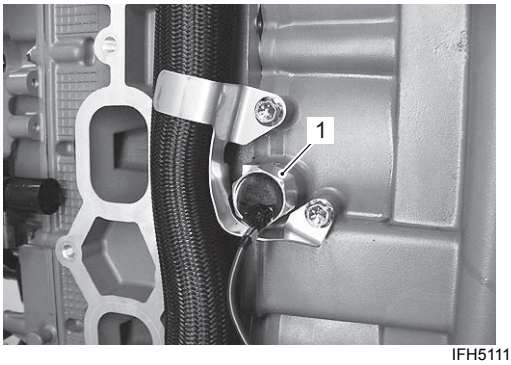

IFH511130058-01

1. Knock sensor

O2 Sensor with Heater

The O2 sensor is install on the top of the cylinder.
O2 sensor detects the oxygen concentration in the exhaust gas and feed it back to the ECM, compensating the fuel injection duration.
The fuel injection amount is compensated based on the oxygen density in the exhaust gas detected with the O2 sensor by the value programmed based on this data, engine speed, etc.
To make the O2 sensor function properly, a built-in heater is equipped in O2 sensor.
The built-in heater is turned on or off by ECM.

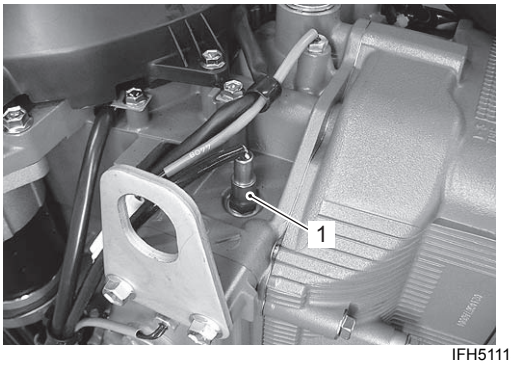

IFH511130033-02

1. O2 sensor

Trim Sensor

The trim sensor is variable resistor type.
With the sensor signal received, the ECM performs the learning of the trim position and it controls the position of trim down limit.
The trim sensor signal also operates the trim meter through the ECM.

NOTE

When the ECM has been replaced, the trim sensor removed/reinstalled, or the mid unit overhauled, re-setting the trim down limit position must be performed.

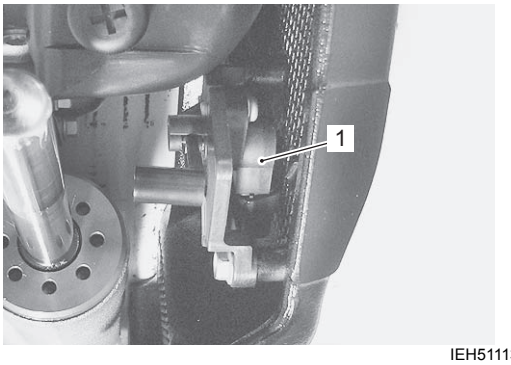

IEH511130014-01

1. Trim sensor

ECM Main Relay

The ECM main relay is installed in the fuse box. When energized by turning the ignition switch ON, a circuit is formed which supplies battery voltage to the ECM, fuel injector, ignition coil, IAC valve, high pressure fuel pump, OCV (Oil Control Valve) and VSV (Vacuum Switching Valve).
With the ignition switch in the “OFF” position, and the UP or DOWN button of the PTT switch pressed, the main relay turns “ON” to supply 12 V power to the ECM, which then performs the on/off control of the PTT motor relay.

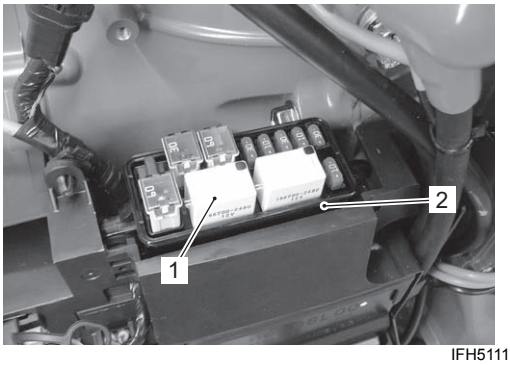

IFH511130001-04

1. ECM main relay	2. Fuse box

Cranking Switch Signal

The ECM detects if the engine is being started by the position of ignition switch. When the ignition key is turned to ST position, a voltage (12 V) signal is input to the ECM.
The ECM in turn sets the ignition, fuel injection, IAC, etc. to the starting mode.
When the key is turned to the IG position after the engine has been started, the input voltage becomes approx. 2.5 V.

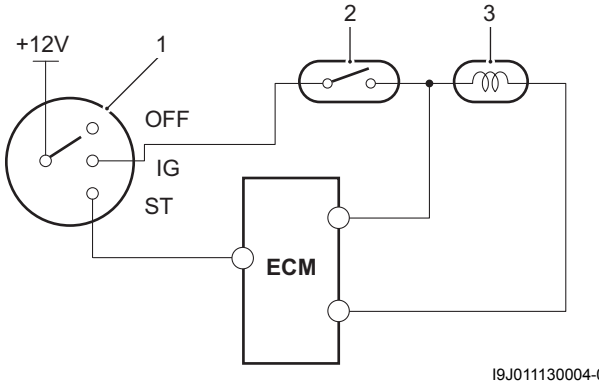

I9J011130004-03

1. Ignition switch	3. To starter motor relay
2. Neutral switch	

Emergency Stop Switch

When the cord from the plate of the switch is secured to the operator, the plate will be pulled off if the operator is suddenly thrown overboard.
The circuit of emergency stop switch will be closed when the plate is removed.
Then the ECM does not provide fuel injector operating signal, ignition signal, fuel pump operating signal and starter motor relay operating signal.

Failure symptoms:

A switch short circuit will not allow the motor to start.

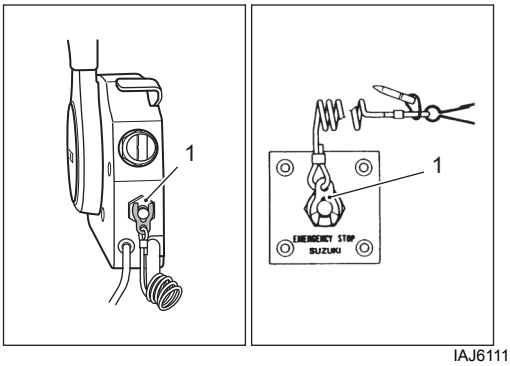

IAJ611130015-01

1. Emergency stop switch

ECM Power Source Line

CENFH5111301003

The ECM is battery dependent and must be provided with its own dedicated 12V power supply. The electrical circuits which provide this supply are:

1) The sub battery cable to the white lead wire in the remote control extension harness to the ignition switch.
   When the ignition switch is turned ON, battery power passes from the white lead wire, through the ignition switch contacts to the gray output lead wire to the No.12 terminal of ECM.

NOTE

Ensure battery cable connections are clean and secure.
Failure at the battery connection will cause incorrect operation of the ECM and starter motor cranking system.

2) The engine wiring harness to the main relay. When the ECM main relay is energized by turning the ignition switch ON, a circuit is formed which supplies battery voltage to the No.36 terminal of ECM.

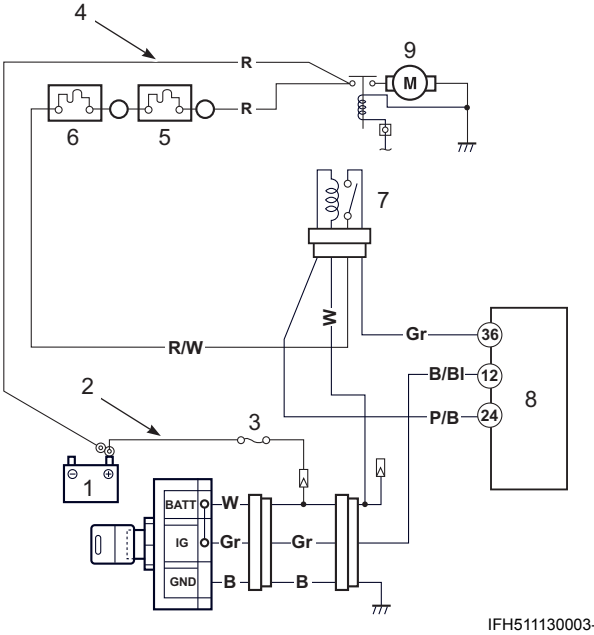

IFH511130003-03

1. Battery	6. Fuse (30 A)
2. Sub battery cable	7. ECM main relay
3. Fuse (15 A)	8. ECM
4. Main battery cable	9. Starter motor
5. Fuse (60 A)	

Component Location

Location of Sensor and Switch

CENFH5111303001

Refer to “Wiring Harness Routing Diagram” in Section 4A (Page 4A-2).

Service Instructions

Resistance Check

CENFH5111306001

Special tool
TOOL : 09900–25008 (Multi circuit tester set)

Tester knob indication
Resistance (Ω)

NOTE

Make sure ignition switch is always OFF when measuring resistance.

1) Turn ignition switch OFF.
2) Disconnect battery cables from battery.
3) Disconnect wire harness connectors from ECM.
4) Connect the tester probes to terminal (wire harness side) and measure resistance according to the “Resistance Table” (Page 1C-8).

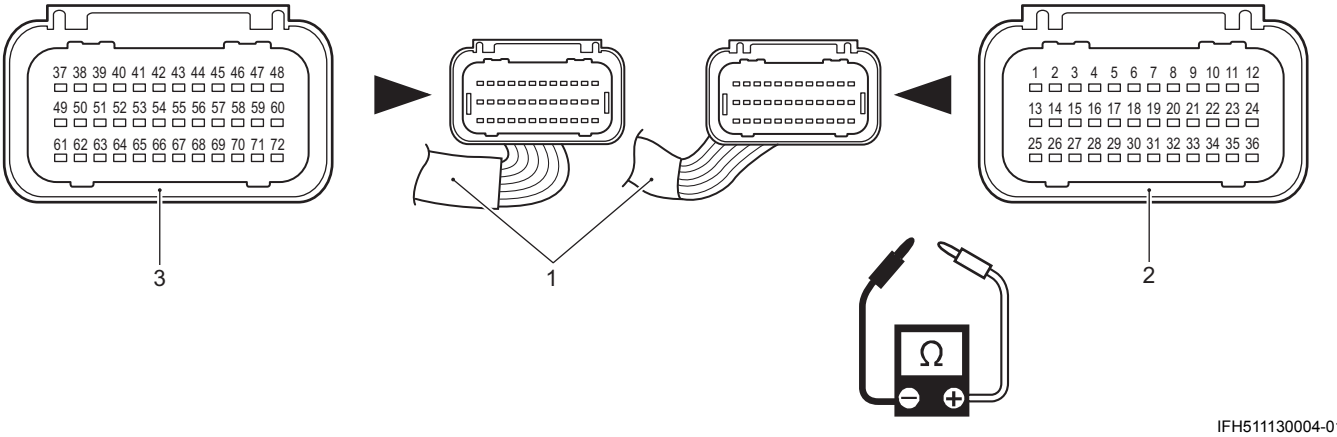

IFH511130004-01

1. Wire harness	2. Black connector	3. Gray connector

NOTE

Disconnect remote control wire harness and connect tester probe to terminal (“A”, White wire) in engine main wiring harness connector.

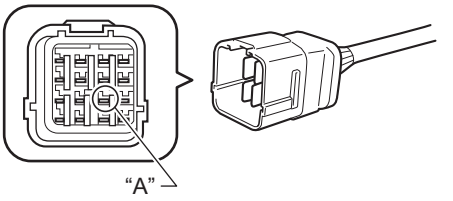

IFH511130054-02

Resistance Table

Circuit	Terminal for tester probe connection	Standard resistance at 20 °C (68 °F)
CKP sensor	4 (R/B) to 31 (B/W)	168 – 252 Ω
Fuel injector No.1	41 (O/B) to 36 (Gr)	10 – 14 Ω
Fuel injector No.2	43 (B/Br) to 36 (Gr)	
Fuel injector No.3	46 (R/W) to 36 (Gr)	
Fuel injector No.4	39 (Lg) to 36 (Gr)	
IAC Valve #1	59 (W/B) to 36 (Gr)	25 – 34 Ω
IAC Valve #2	47 (R/Y) to 36 (Gr)	
IAC Valve #3	50 (O/Bl) to 36 (Gr)	
IAC Valve #4	38 (W/Bl) to 36 (Gr)	
OCV (Oil control valve)	44 (Br/R) to 36 (Gr)	6.0 – 8.3 Ω
VSV	49 (Gr/G) to 36 (Gr)	34 – 46 Ω
IAT sensor	14 (Lg/B) to 31 (B/W)	0 °C (32 °F): 5.3 – 6.6 kΩ 25 °C (77 °F): 1.8 – 2.3 kΩ 50 °C (122 °F): 0.73 – 0.96 kΩ 75 °C (135 °F): 0.33 – 0.45 kΩ (Thermistor characteristic)
Cylinder temperature sensor	15 (Lg/W) to 31 (B/W)	
Ex. manifold temperature sensor	17 (V/W) to 31 (B/W)	
ECM main relay	24 (P/B) to Terminal “A” (W)	145 – 190 Ω

Cylinder Temp. Sensor Removal and Installation

CENFH5111306002

Removal

1) Disconnect the cylinder temp. sensor lead wire connector (1).

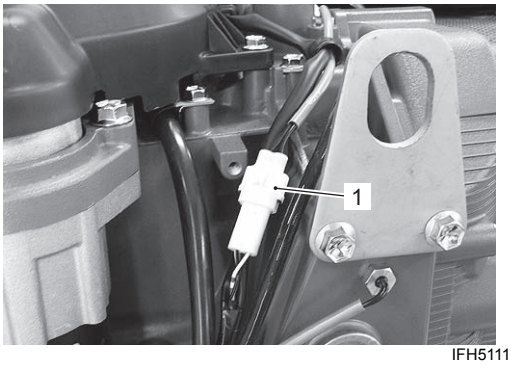

IFH511130059-01

2) Remove the bolt and harness clamp (2)

3) Loosen and remove the cylinder temp. sensor (3).

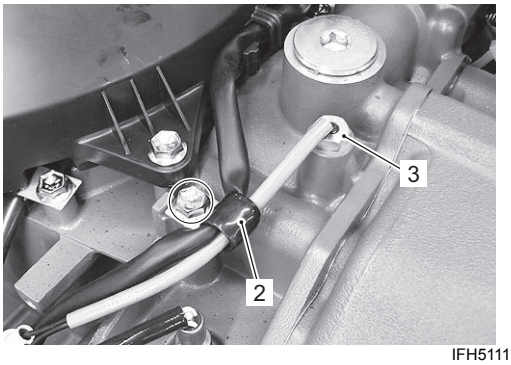

IFH511130035-03

Installation

Installation is reverse order of removal.

- Clean mating surface of sensor and cylinder.
- Tighten sensor to specified torque.

  Tightening torque
  Cylinder temp. sensor (a): 8 N·m (0.8 kgf-m, 5.8 lbf-ft)

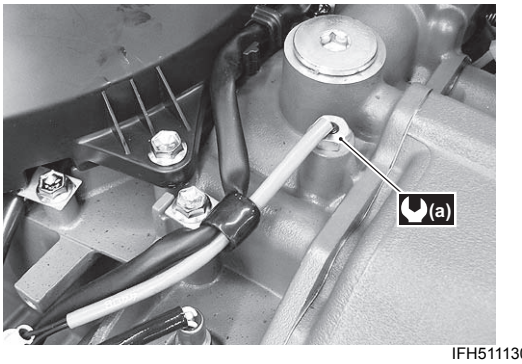

IFH511130036-04

- Check wire routing.
  Refer to “Wiring Harness Routing Diagram” in Section 4A (Page 4A-2).

Cylinder Temp. Sensor Inspection

CENFH5111306003

1) Remove the cylinder temperature sensor.
   Refer to “Cylinder Temp. Sensor Removal and Installation” (Page 1C-8).
2) Immerse temperature sensing part of cylinder temp. sensor in water.
3) Measure resistance between sensor terminals while heating water gradually.
4) If measured resistance does not change in the proportion indicated, replace sensor.

Cylinder temp. sensor specification

Water temperature: °C (°F)	0 (32)	25 (77)	50 (122)	75 (135)
Resistance (kΩ)	5.3 – 6.6	1.8 – 2.3	0.73 – 0.96	0.33 – 0.45

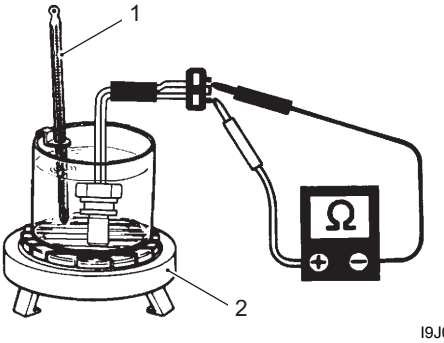

I9J011130051-01

1. Thermometer	2. Heater

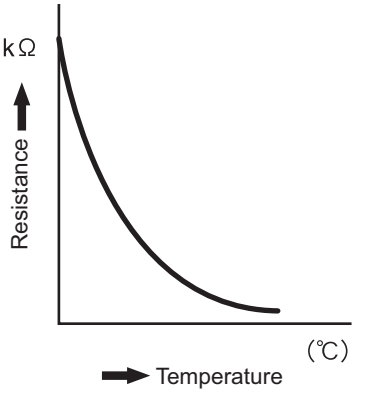

I9J011130008-02

5) Reinstall the cylinder temp. sensor.
   Refer to “Cylinder Temp. Sensor Removal and Installation” (Page 1C-8).

Ex. Manifold Temp. Sensor Removal and Installation

CENFH5111306004

Removal

1) Disconnect the Ex. manifold temp. sensor lead wire connector (1).
   Unfasten the cable tie (2) binding lead wire.
2) Loosen and remove the Ex. manifold temp. sensor (3).

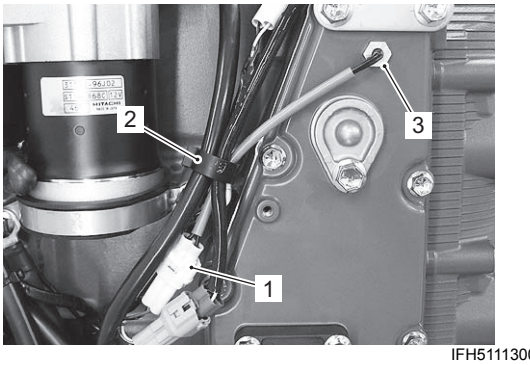

IFH511130037-03

Installation

Installation is reverse order of removal.

- Clean mating surface of sensor and exhaust cover.
- Tighten sensor to specified torque.

Tightening torque
Ex. manifold temp. sensor (a): 8 N·m (0.8 kgf-m, 5.8 lbf-ft)

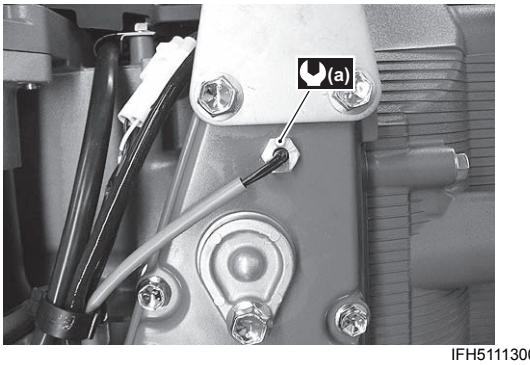

IFH511130038-02

- Check wiring harness routing.
  Refer to “Wiring Harness Routing Diagram” in Section 4A (Page 4A-2).

Ex. Manifold Temp. Sensor Inspection

CENFH5111306005

1) Remove the Ex. manifold temp. sensor.
   Refer to “Ex. Manifold Temp. Sensor Removal and Installation” (Page 1C-9).
2) Immerse temperature sensing part of Ex. manifold temp. sensor in water.
3) Measure resistance between sensor terminals while heating water gradually.
4) If measured resistance does not change in the proportion indicated, replace sensor.

Ex. manifold temp. sensor specification

Water temperature: °C (°F)	0 (32)	25 (77)	50 (122)	75 (135)
Resistance (kΩ)	5.3 – 6.6	1.8 – 2.3	0.73 – 0.96	0.33 – 0.45

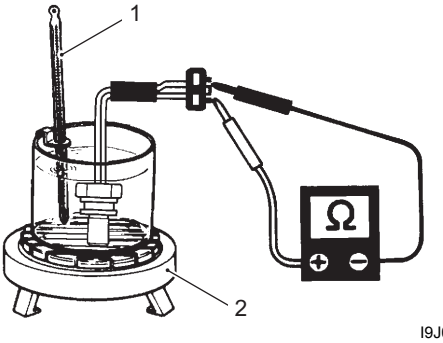

I9J011130051-01

1. Thermometer	2. Heater

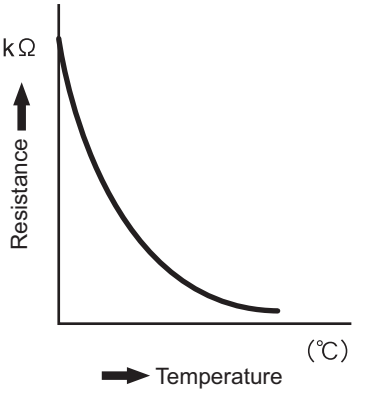

I9J011130008-02

5) Reinstall the Ex. manifold temp. sensor.
   Refer to “Ex. Manifold Temp. Sensor Removal and Installation” (Page 1C-9).

CKP Sensor Removal and Installation

CENFH5111306006

Removal

1) Remove the ring gear cover.
   Refer to “Ring Gear Cover Removal and Installation” in Section 1D (Page 1D-2).
2) Remove the ring gear under cover bolts (1).

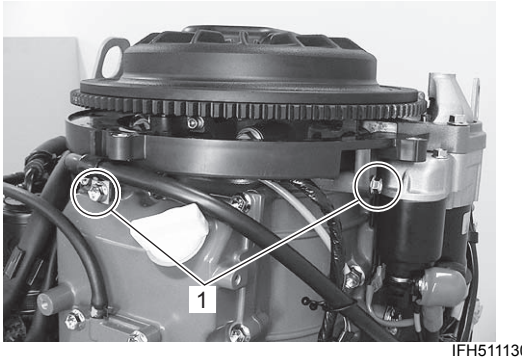

IFH511130060-01

3) Remove the clamp and disconnect CKP sensor lead wire connector (2).

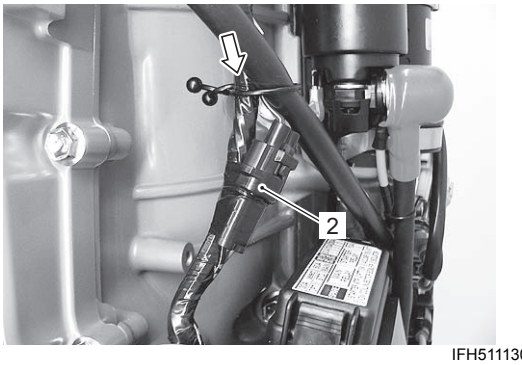

IFH511130039-02

4) Remove two screws and CKP sensor (3).

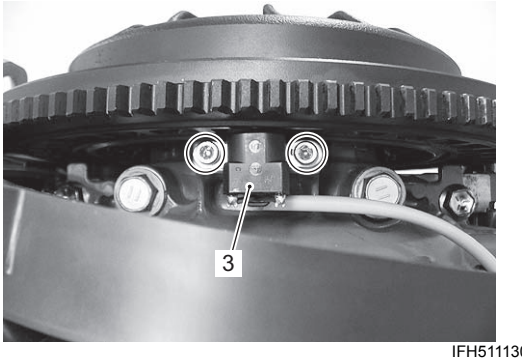

IFH511130061-01

Installation
Installation is reverse order of removal with special attention to the following steps.

- Apply thread lock to the sensor mounting screws.

  1342 : Thread lock cement 99000–32050 (SUZUKI Thread Lock 1342 (50 g))

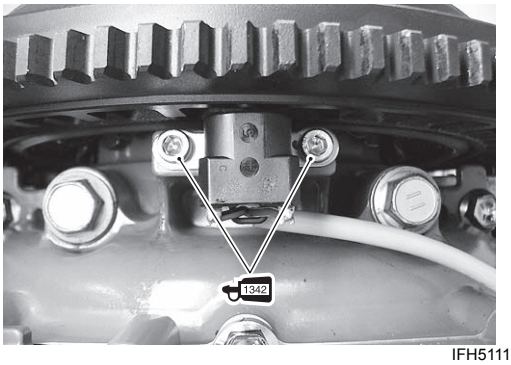

IFH511130040-02

- Install CKP sensor with air gap of 0.75 mm (0.030 in) between sensor and reluctor bar on flywheel, then tighten sensor mounting screws securely.

  CKP sensor air gap
  0.75 mm (0.030 in)

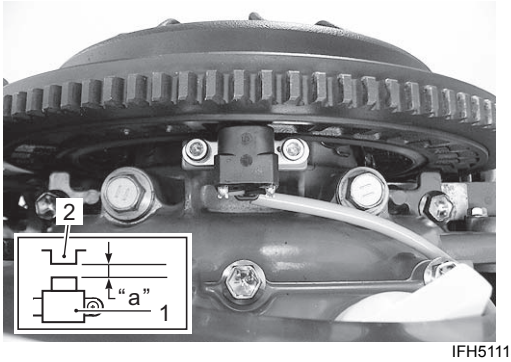

IFH511130041-02

1. CKP sensor	"a": 0.75 mm (0.030 in)
2. Reluctor bar	

- Check to ensure that all removed parts are back in original position.
- Check wire routing.
  Refer to "Wiring Harness Routing Diagram" in Section 4A (Page 4A-2).

CKP Sensor Inspection

CENFH5111306007

Inspect the CKP sensor.
Refer to "Resistance Check" (Page 1C-7).

IAT Sensor Removal and Installation

CENFH5111306008

Removal
Disconnect the sensor lead wire connector (1) and remove IAT sensor from air intake silencer case.

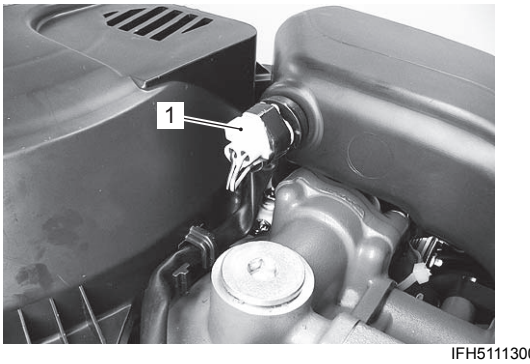

IFH511130042-02

Installation
Installation is reverse order of removal.

IAT Sensor Inspection

CENFH5111306009

1) Remove the IAT sensor.
   Refer to "IAT Sensor Removal and Installation" (Page 1C-11).
2) Immerse temperature sensing part of IAT sensor in water.
3) Measure resistance between sensor terminals while heating water gradually.
4) If measured resistance does not change in the proportion indicated, replace sensor.

IAT sensor specification

Water temperature: °C (°F)	0 (32)	25 (77)	50 (122)	75 (135)
Resistance (kΩ)	5.3 – 6.6	1.8 – 2.3	0.73 – 0.96	0.33 – 0.45

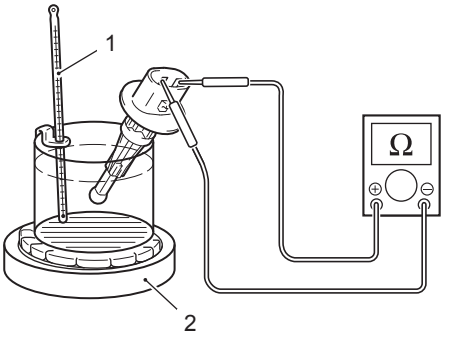

I9J011130007-03

1. Thermometer	2. Heater

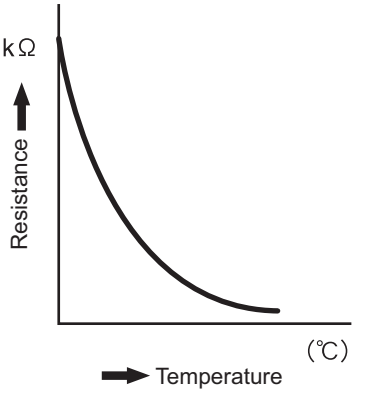

I9J011130008-02

5) Reinstall the IAT sensor.
Refer to “IAT Sensor Removal and Installation” (Page 1C-11).

CMP Sensor Removal and Installation

CENFH5111306010

Removal

1) For the CMP sensor #2;
remove the air intake silencer case (1).
Refer to “Air Intake Silencer Case Removal and Installation” in Section 1D (Page 1D-2).

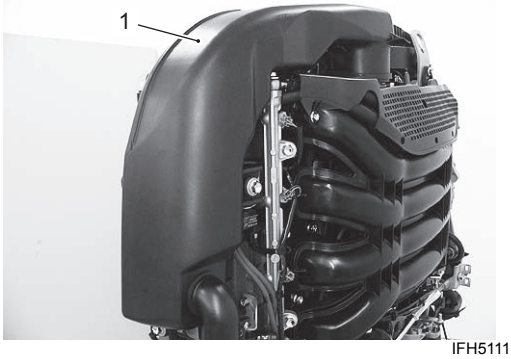

IFH511130062-02

2) Disconnect the CMP sensor lead wire connector (2) at sensor.
3) Remove the bolt, CMP sensor (3) and sensor cover (4).

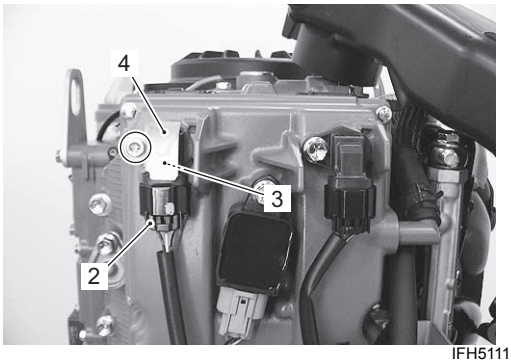

IFH511130063-04

Installation

Installation is reverse order of removal.

- Install CMP sensor (1) and sensor cover (2), then tighten sensor mounting screw securely.
- Connect sensor lead wire connector to CMP sensor.

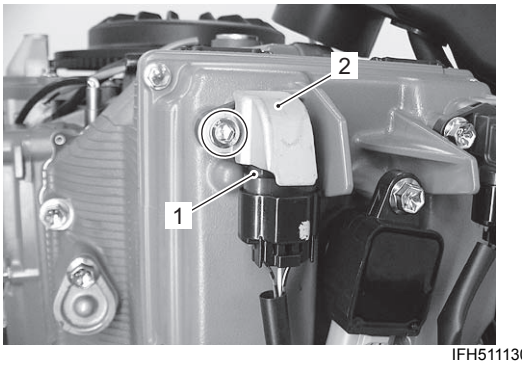

IFH511130064-01

CMP Sensor Inspection

CENFH5111306011

1) Turn ignition switch OFF.
2) Remove the bolt and CMP sensor.
3) Connect the 36-pin test cords between ECM and wire harness as shown in figure.

Special tool
TOOL (A): 09930–88730 (36-pin test cord set)

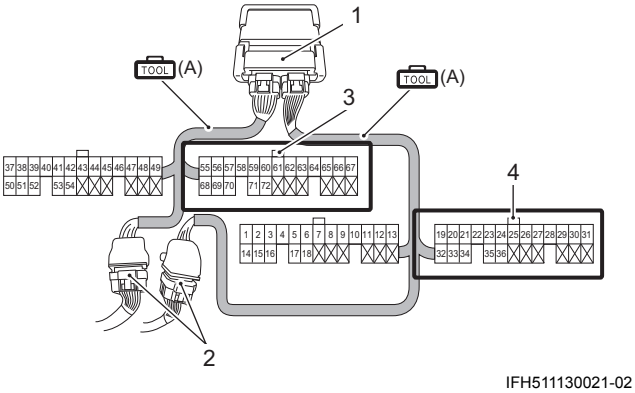

IFH511130021-02

1. ECM	3. Black connector
2. Wire harness	4. Black connector

4) Connect the tester probe (“+”, Red) to each terminal.

CMP sensor	Terminal	Wire color
No.1	69	Y/Bl
No.2 (VVT)	70	O/G

5) Connect the tester probe (“–”, Black) to No.31 terminal (or to body ground).

Special tool
TOOL : 09900–25008 (Multi circuit tester set)

Tester knob indication
DC voltage (⎓)

36-pin test cord (Black connector)

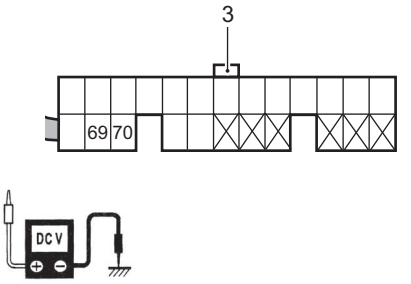

IFH511130005-01

36-pin test cord (Black connector)

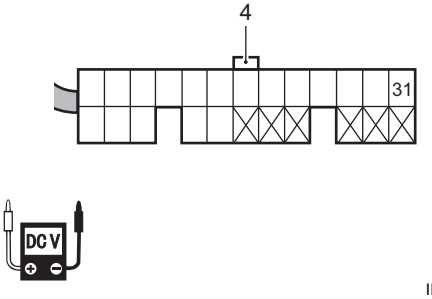

IFH511130006-01

6) Turn ignition switch ON.
7) Measure the voltage when the tip of a steel screwdriver is brought near and then pulled away from the sensor tip.

When screwdriver is brought near
Approx. 5.0 V

When screwdriver is pulled away
Approx. 0.3 V

If the voltage does not change in the above test, check wire harnesses for open and short.
If wire harnesses are in good condition, replace CMP sensor and recheck.

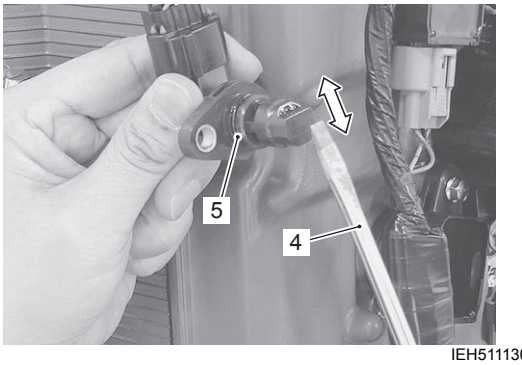

IEH511130036-05

4. Screw driver	5. CMP sensor

8) Reinstall the CMP sensor.

MAP Sensor Removal and Installation

CENFH5111306012

Removal

1) Loosen the three bolts and remove fuel hose guard (1).

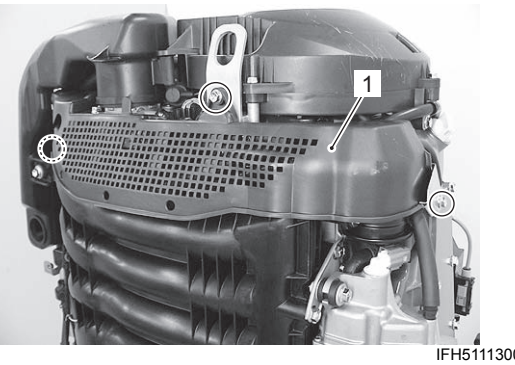

IFH511130065-01

2) Disconnect lead wire connector (2) at MAP sensor.
3) Remove bolts and MAP sensor (3) from intake manifold.

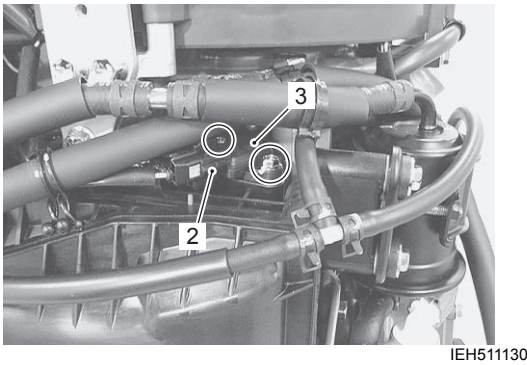

IEH511130038-02

Installation

Installation is reverse order of removal.

- Install MAP sensor, then tighten mounting screw securely.
- Connect sensor lead wire connector to MAP sensor.
- Install fuel hose guard.

MAP Sensor Output Voltage Inspection

CENFH5111306013

1) Turn ignition switch OFF.
2) Connect the 36-pin test cord between ECM and wire harness as shown in figure.

Special tool
(A): 09930–88730 (36-pin test cord set)

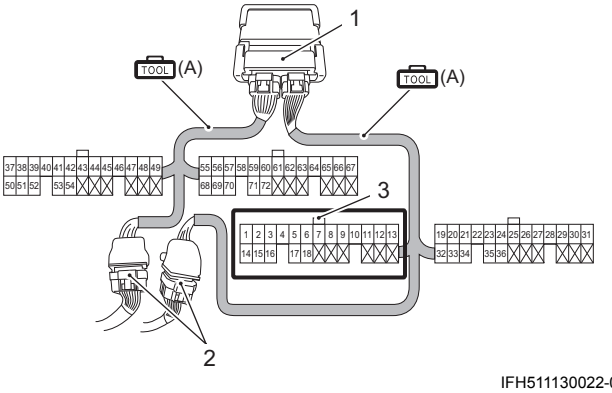

IFH511130022-03

1. ECM	3. White connector
2. Wire harness	

3) Remove the bolts and MAP sensor (4).

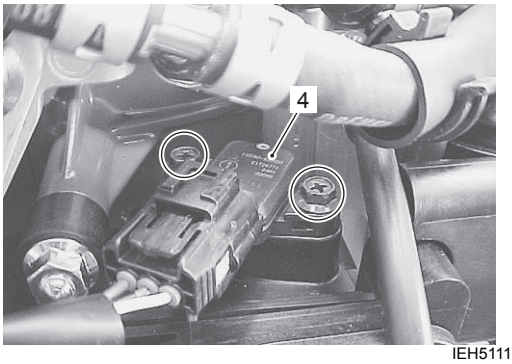

IEH511130113-01

4) Install MAP sensor into special tool.
5) Connect vacuum pump gauge (with hose) to MAP sensor (special tool) as shown in figure.

Special tool
(B): 09917–49610 (Vacuum pump adapter)
(C): 09917–47011 (Vacuum pump gauge)

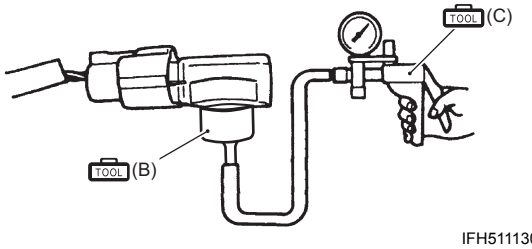

IFH511130043-01

6) Turn ignition switch ON.
7) While applying negative pressure (vacuum) to MAP sensor, measure "6" terminal voltage.

MAP sensor output voltage change

Negative pressure: kPa (kg/cm², mmHg)	0 (0, 0)	40 (0.4, 300)	80 (0.8, 600)
"6" terminal voltage (V)	4.00	2.42	0.84

(At 759.8 mmHg, 101.3 kPa, 29.91 inHg barometric pressure.)

36-pin test cord (White connector)

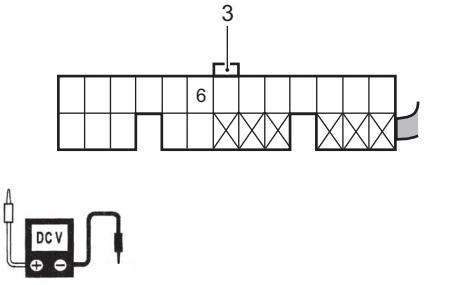

IFH511130007-02

Special tool
: 09900–25008 (Multi circuit tester set)

Tester knob indication
DC voltage (⎓)

If out of specification, check wire harnesses for open and short. If wire harnesses are in good condition, replace MAP sensor and recheck.

8) Reinstall MAP sensor.
Refer to "MAP Sensor Removal and Installation" (Page 1C-13).

O2 Sensor Removal and Installation

CENFH5111306032

Removal

1) Unfasten the cable tie (3) binding lead wire and disconnect the O2 sensor lead wire connector (2).
2) Using special tool, remove the O2 sensor (1).

Special tool
TOOL (A): 09933–39810 (O2 sensor socket)

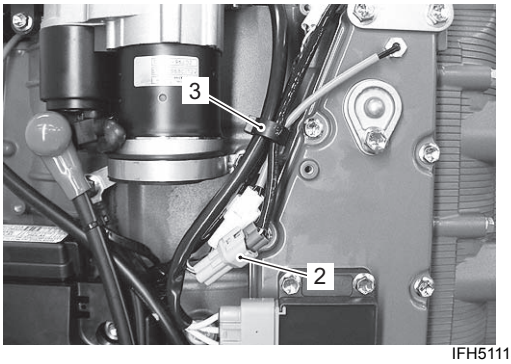

IFH511130045-02

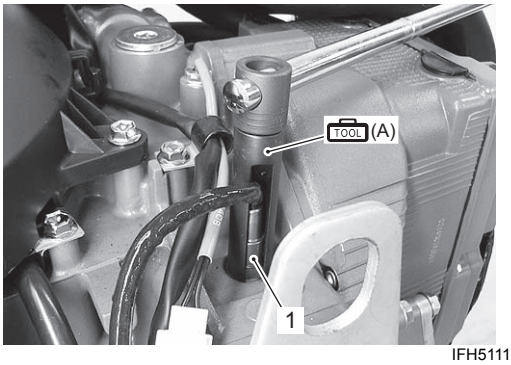

IFH511130066-01

Installation

Installation is reverse order of removal with special attention to the following steps.

- Tighten the O2 sensor (1) to the specified torque.

Tightening torque
O2 sensor (a): 10 N·m (1.0 kgf-m, 7.0 lbf-ft)

NOTE

- **Always keep the O2 sensor away from any grease and oil.**
- **Examine O2 sensor gasket for damage. Always replace O2 sensor assembly if sealing performance is suspect.**

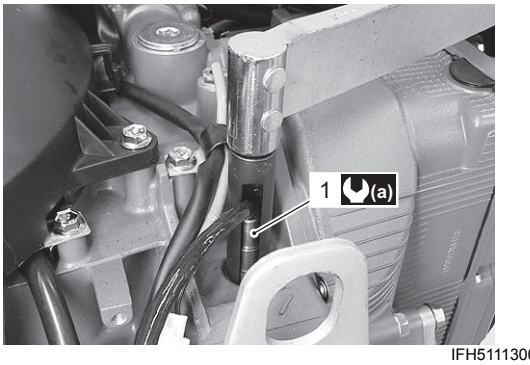

IFH511130046-02

O2 Sensor Output Voltage Inspection

CENFH5111306033

1) Turn the ignition switch “OFF”.
2) Connect the 36-pin test cord set between ECM and wiring harness as shown in figure.

Special tool
TOOL (A): 09930–88730 (36-pin test cord set)

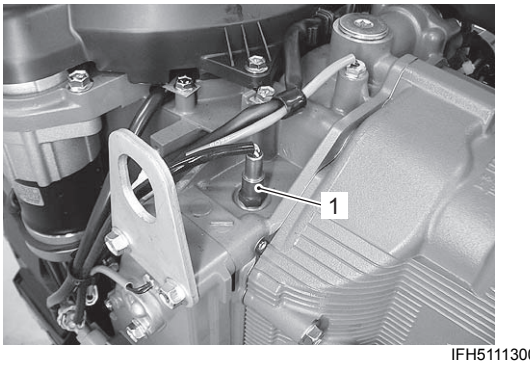

IFH511130044-02

1. O2 sensor	

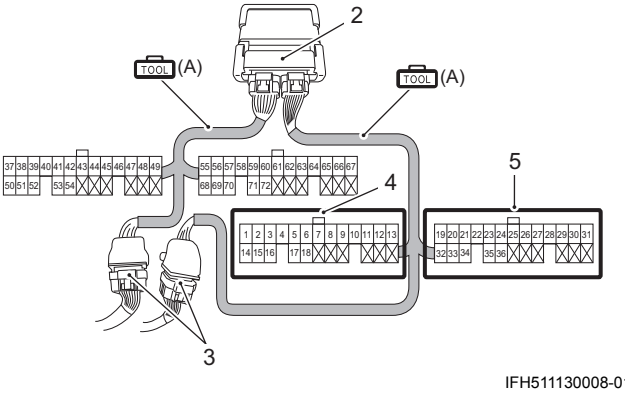

IFH511130008-01

2. ECM	4. White connector
3. Wire harness	5. Black connector

3) Connect the tester probe (“+”, Red) to No.3 terminal.
4) Connect the tester probe (“–”, Black) to No.31 terminal (or to body ground).

Special tool
TOOL : 09900–25008 (Multi circuit tester set)

Tester knob indication
DC voltage (⎓)

36-pin test cord (White connector)

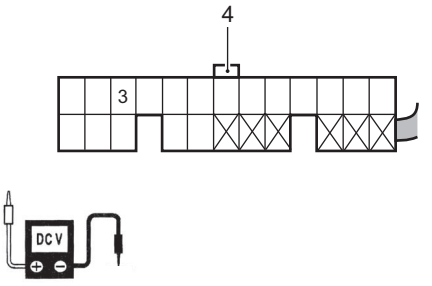

IFH511130009-01

36-pin test cord (Black connector)

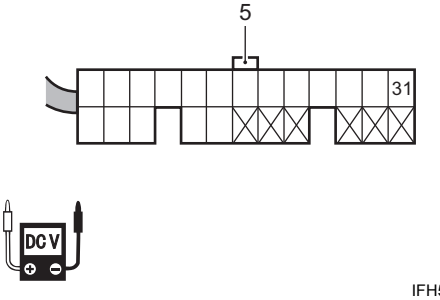

IFH511130010-02

5) Turn ignition switch ON.
6) Measure the O2 sensor output voltage.

O2 sensor output voltage
0.2 V or less

7) Start engine and allow to warm up.
8) After warming up, measure the O2 sensor output voltage while holding the engine speed at idling.

NOTE

The O2 sensor outputs 0 volt to 1.0 volt according to the oxygen concentration in exhaust gas.

O2 sensor output voltage at idling
0.7 V or more

9) If the voltage does not change in the above test, check wiring harness for open and short.
If wiring harness is in good condition, replace O2 sensor and recheck.

O2 Sensor Heater Inspection

CENFH5111306034

1) Turn the ignition switch OFF.
2) Disconnect O2 sensor lead wire connector.
3) Measure resistance between sensor terminals (1) and (2).

O2 Sensor heater resistance at 20 °C (68 °F)
5.5 – 8.5 Ω

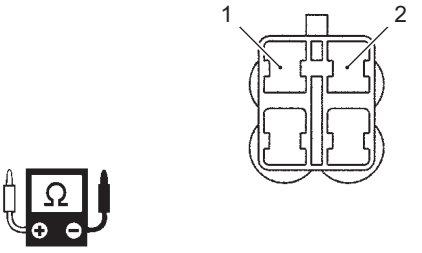

IFH511130011-02

1. Heater (+)	2. Heater (–)

4) If measurement exceeds specification, replace O2 sensor.
5) Connect O2 sensor lead wire connector to wire harness.
6) Connect the 36-pin test cord set between ECM and wiring harness as shown in figure.

Special tool
TOOL (A): 09930–88730 (36-pin test cord set)

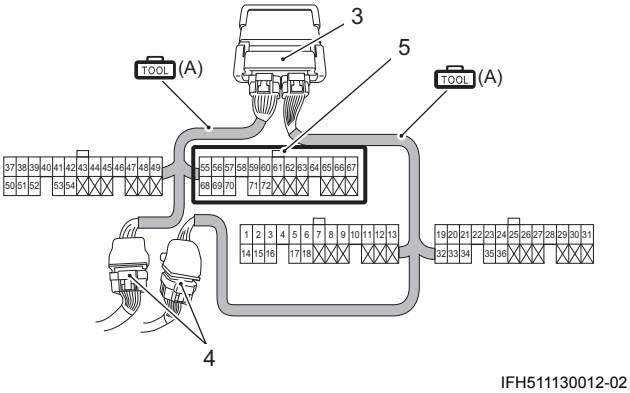

IFH511130012-02

3. ECM	5. Black connector
4. Wire harness	

7) Connect the tester probe (“+”, Red) to No.60 terminal.
8) Connect the tester probe (“–”, Black) to body ground.

Special tool
TOOL : 09900–25008 (Multi circuit tester set)

Tester knob indication
DC voltage (⎓)

36-pin test cord (Black connector)

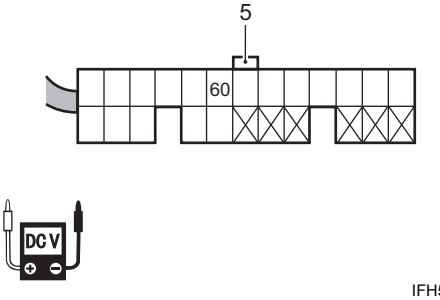

IFH511130013-02

9) Turn the ignition switch “ON” and measure the O2 sensor heater voltage.

O2 sensor heater voltage
Approx. 12 V (Battery voltage)

10) Start engine and allow to warm up.
11) After warming up, measure the O2 sensor heater voltage while holding the engine speed at idling.

O2 sensor heater voltage at idling
Approx. 0 – 0.3 V

12) If inspection in step 9 and/or step 11 out of specification, check wiring harness for open and short.
If wire harnesses are in good condition, replace O2 sensor and recheck.

Knock Sensor Removal and Installation

CENFH5111306035

Removal

1) Remove the intake manifold.
Refer to “Intake Manifold Removal and Installation” in Section 1D (Page 1D-8).
2) Disconnect the sensor lead wire connector.
Remove the knock sensor (1).

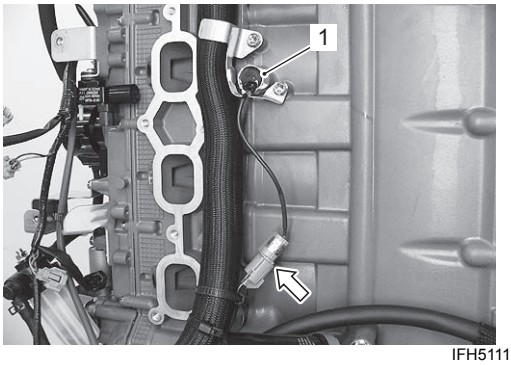

IFH511130067-01

Installation

Installation is reverse order of removal with special attention to the following steps.

- Tighten the knock sensor (1) to the specified torque.

Tightening torque
Knock sensor (a): 22 N·m (2.2 kgf-m, 16.0 lbf-ft)

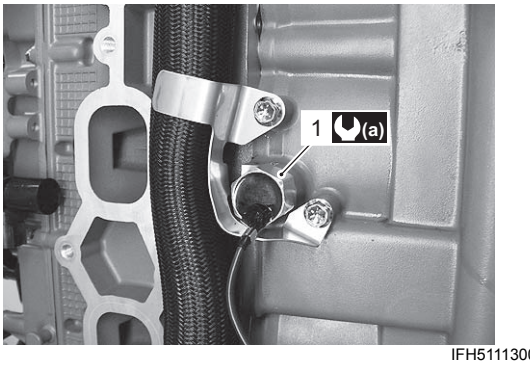

IFH511130068-01

- Install the intake manifold.
Refer to “Intake Manifold Removal and Installation” in Section 1D (Page 1D-8).

Knock Sensor Inspection

CENFH5111306036

1) Turn ignition switch OFF.
2) Connect the 36-pin test cord set between ECM and wire harness as shown in figure.

Special tool
TOOL (A): 09930–88730 (36-pin test cord set)

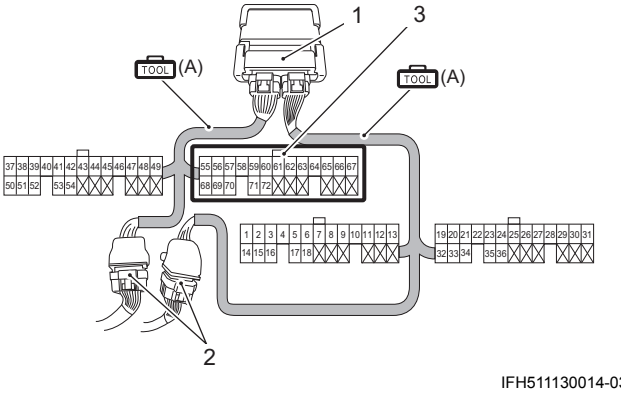

IFH511130014-03

1. ECM	3. Black connector
2. Wire harness	

3) Connect the tester probe (“+”, Red) to No.56 terminal.

4) Connect the tester probe ("–", Black) to No.61 terminal (or to body ground).

Special tool
(TOOL) : 09900–25008 (Multi circuit tester set)

Tester knob indication
DC Voltage (⎓)

36-pin test cord (Black connector)

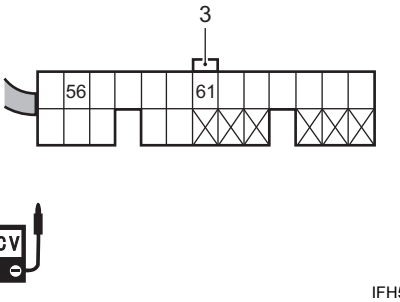

IFH511130015-03

5) Check for sensor output voltage.

Sensor output voltage

Ignition switch ON	**Approx. 2.5 V**
Engine running at idle speed	**Approx. 2.5 V**

6) If out of specification, check wire harnesses for open and short. If wire harnesses are in good condition, replace knock sensor and recheck.

OCV (Oil Control Valve) Inspection

CENFH5111306015

1) Remove the OCV (1).
Refer to "OCV (Oil Control Valve) Removal and Installation" in Section 1D (Page 1D-19).

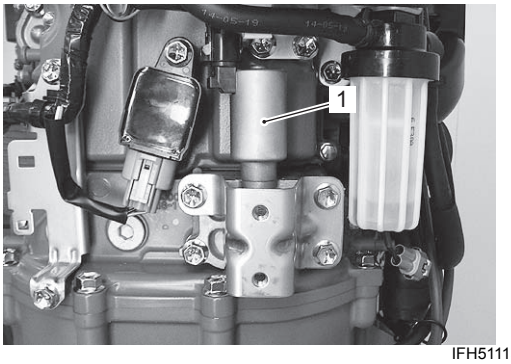

IFH511130069-01

2) Check for operating sound (ticking sound) when battery voltage applied to and removed from the terminals of oil control valve.

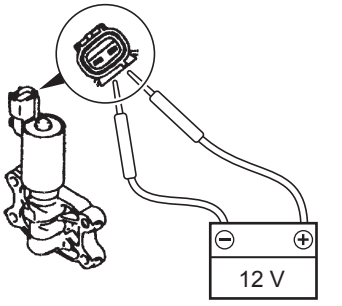

IEH511130043-01

3) Check resistance between the two OCV terminals.

Special tool
(TOOL) : 09900–25008 (Multi circuit tester set)

Tester knob indication
Resistance (Ω)

OCV resistance
6.0 – 8.3 Ω

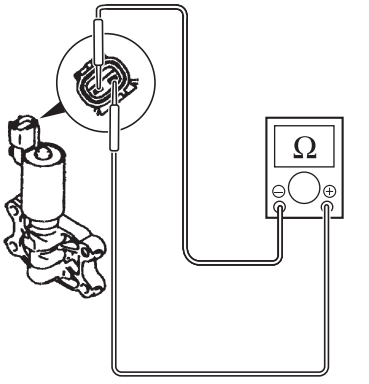

IEH511130044-01

If out of specification, replace the OCV with a new one.

4) Install OCV.
Refer to "OCV (Oil Control Valve) Removal and Installation" in Section 1D (Page 1D-19).

VSV (Vacuum Switching Valve) Removal and Installation

CENFH5111306016

Removal

1) Turn the ignition switch OFF.
2) Remove the air intake silencer case.
   Refer to “Air Intake Silencer Case Removal and Installation” in Section 1D (Page 1D-2).
3) Disconnect the vacuum hoses (1).

NOTE

Before removing hoses to check VSV, mark each hose for position to ensure correct hose connection on assembly.

4) Remove the screw (2) securing VSV to the bracket.
5) Disconnect the VSV connector (3).

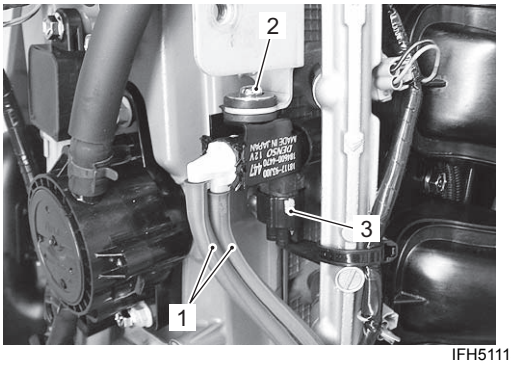

IFH511130047-03

Installation

Installation is reverse order of removal with special attention to the following step.

- Connect the vacuum hoses properly to VSV.

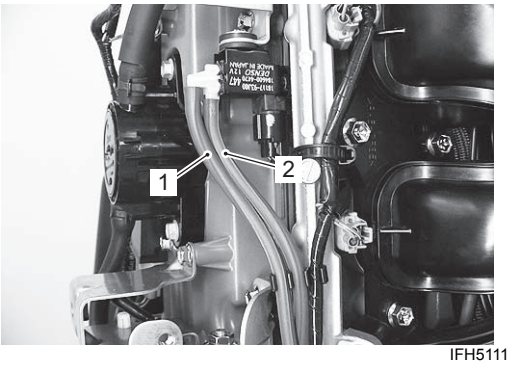

IFH511130048-02

1. Vacuum hose (Vacuum tank to VSV)	2. Vacuum hose (VSV to depression chamber)

VSV (Vacuum Switching Valve) Inspection

CENFH5111306017

1) With ignition switch OFF, remove the VSV.
   Refer to “VSV (Vacuum Switching Valve) Removal and Installation” (Page 1C-19).
2) Check resistance between VSV terminals.

Special tool
TOOL (A): 09900–25008 (Multi circuit tester set)

Tester knob indication
Resistance (Ω)

VSV resistance
34 – 46 Ω

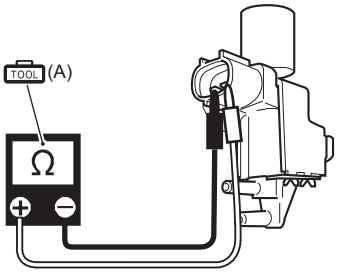

IEH511130106-01

3) With 12 V applied between the VSV terminals, check that port “A” connects to port “B” but not to the filter section “C”.

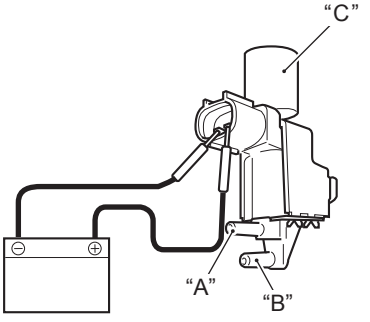

IEH511130045-02

“A”: Port (to depression chamber)	“C”: Filter
“B”: Port (to vacuum tank)	

4) Without voltage applied to the VSV terminals, check that port “A” connects to the filter section “C” but not to port “B”.

Passage continuity between ports / VSV electrical power	“A”	“B”	“C”
Power ON	○——○		
Power OFF	○		○

○——○: Air passage

IEH511130046-02

IAC Valve Removal and Installation

CENFH5111306037

Removal

1) Remove the flywheel.
   Refer to “Flywheel Removal and Installation” in Section 1K (Page 1K-5).
2) Disconnect IAC valve lead wire connector at IAC valve (1).
3) Remove screws (2) and IAC valve.

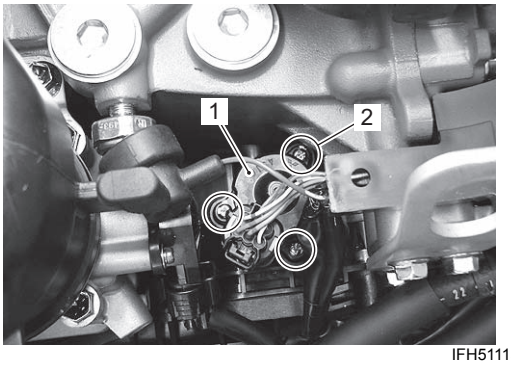

IFH511130070-01

Installation

Installation is reverse order of removal.

- Install IAC valve, then tighten mounting screw securely.
- Connect IAC valve lead wire connector to IAC valve.
- Install flywheel and tighten flywheel bolts to specified torque.
  Refer to “Flywheel Removal and Installation” in Section 1K (Page 1K-5).

IAC Valve Inspection

CENFH5111306038

1) Disconnect connector from IAC valve.
2) Check each coil of IAC valve for resistance.

IAC valve resistance

Terminals	Resistance
Between “1” to “2”	25 – 34 Ω
Between “3” to “2”	
Between “4” to “5”	
Between “6” to “5”	

If out of specification, replace IAC valve.

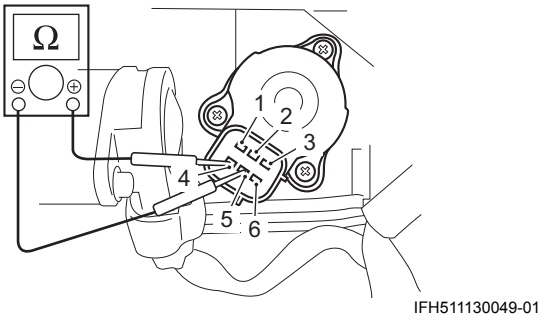

IFH511130049-01

3) Remove the flywheel.
   Refer to “Flywheel Removal and Installation” in Section 1K (Page 1K-5).
4) Remove the screws securing IAC valve, then detach the IAC valve from intake manifold.
5) Connect the connector to IAC valve.
6) When the ignition switch is turned “ON” and “OFF”, check that the rotary valve turns to open and returns to closed.

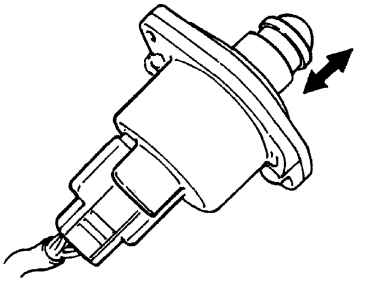

I9J011130018-01

7) If the valve does not turn, check the wiring harness for continuity (between ECM and IAC valve and connector contact condition.
8) Reinstall IAC valve.
   Refer to “IAC Valve Removal and Installation” (Page 1C-20).

TPS Inspection

CENFH5111306039

1) Turn ignition switch OFF.
2) Connect the 36-pin test cord set between ECM and wire harness as shown in figure.

Special tool
(A): 09930–88730 (36-pin test cord set)

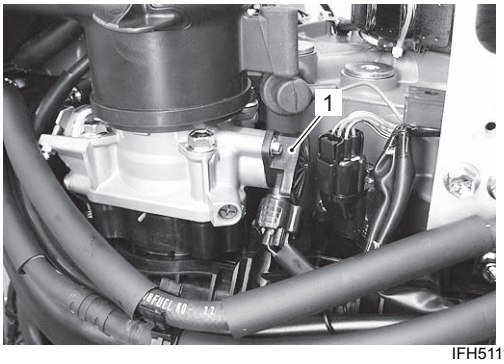

IFH511130050-02

1. TPS	

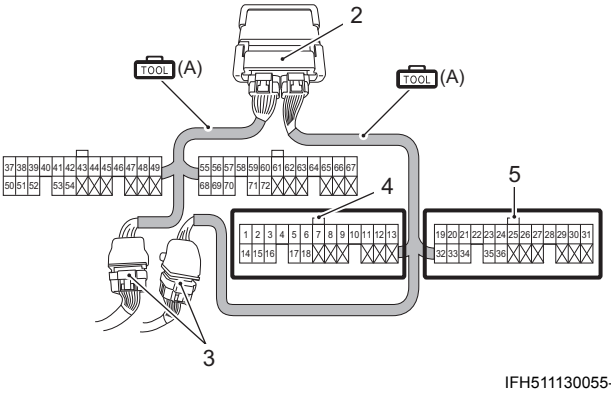

IFH511130055-01

2. ECM	4. White connector
3. Wire harness	5. Black connector

3) Connect tester probe (“+”, Red) to No. 5 terminal.
4) Connect tester probe (“–”, Black) to No. 31 terminal (or to body ground).

36-pin test cord (White connector)

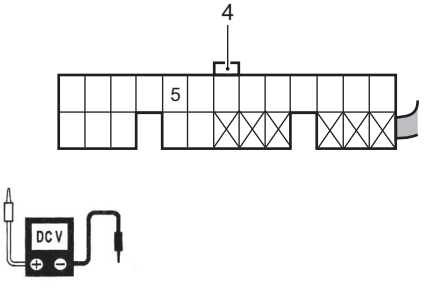

IFH511130017-01

36-pin test cord (Black connector)

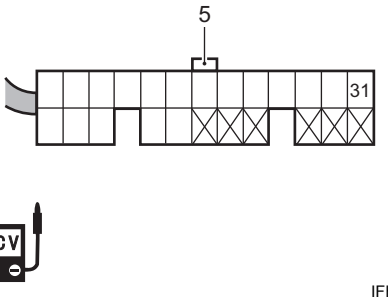

IFH511130018-01

5) Turn the ignition switch ON.
6) Check for sensor output voltage.
Slowly move the throttle lever to open, and check if voltage changes linearly within specification, according to throttle valve opening angle.

Sensor output voltage
FCT position: Approx. 0.7 V
WOT position: Approx. 4.1 V

Special tool
: 09900–25008 (Multi circuit tester set)

Tester knob indication
DC Voltage (⎓)

NOTICE

The throttle body will lose its original performance if it has been disassembled and reassembled.

Do not try to adjust or remove any of the throttle body component parts (Throttle position sensor, throttle valve, throttle stop screw, etc.).
These components have been factory adjusted to precise specifications.

7) If out of specification, check wire harnesses for open and short. If wire harnesses are in good condition, replace the throttle body and recheck.

Shift Position Sensor Removal and Installation

CENFH5111306041

Removal

1) Remove the lower side covers.
Refer to “Lower Side Cover Removal and Installation” in Section 2A (Page 2A-3).
2) Remove the fuel delivery pipe and intake manifold assembly.
Refer to “Intake Manifold Removal and Installation” in Section 1D (Page 1D-8).

3) Disconnect the neutral switch lead wire connector (1) and shift position sensor lead wire connector (2).

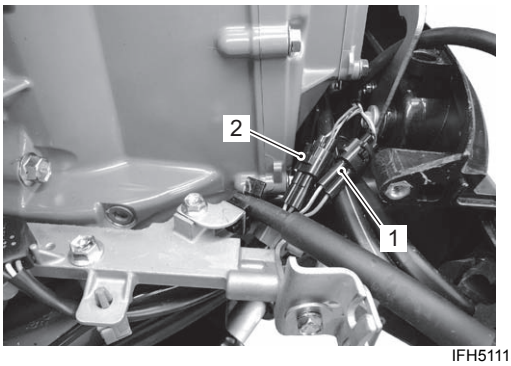

IFH511130071-03

4) Remove E-ring (3) from clutch lever shaft (4).

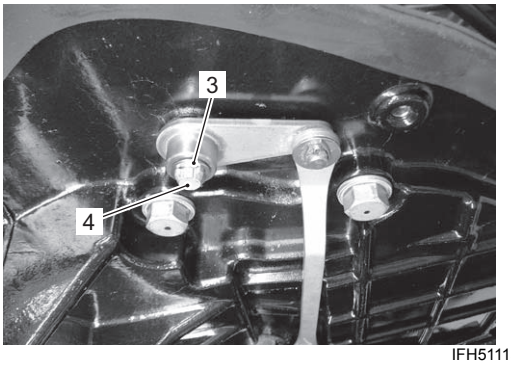

IFH511130073-02

5) Remove the two bolts (5) securing throttle/clutch lever holder (6).
Remove the throttle/clutch lever holder with neutral switch and shift position sensor.

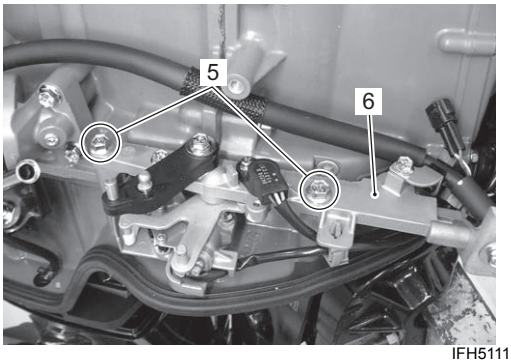

IFH511130072-02

6) Remove the screws and plate (7).

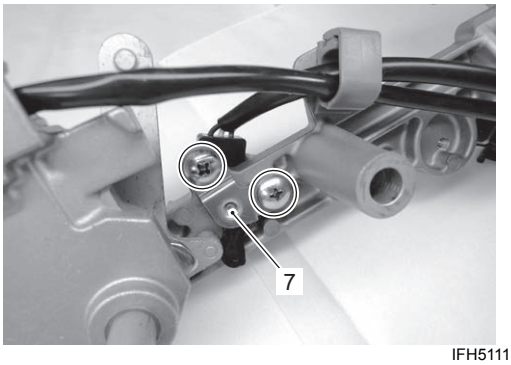

IFH511130074-02

7) Remove the sensor lever (8).

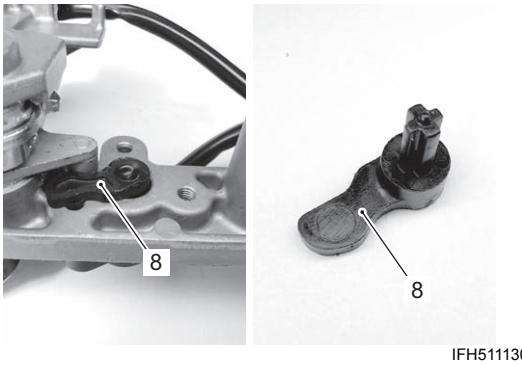

IFH511130076-02

8) Remove the screw and shift position sensor (9).

NOTE

Prior to removing sensor, mark the sensor's original position with a paint or scribe for accurate reinstallation.

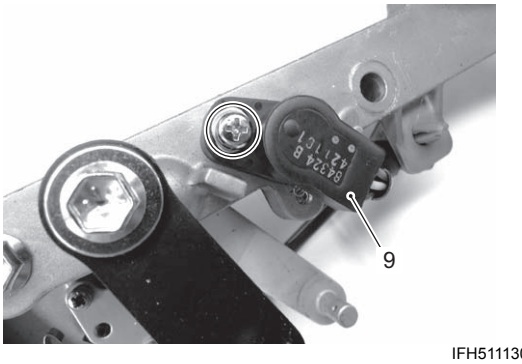

IFH511130075-02

Installation
Installation is reverse order of removal with special attention to the following steps.

- Place the shift position sensor (1) in position, then tighten sensor mounting screw securely.

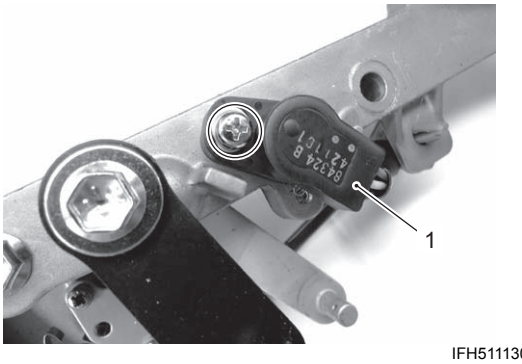

IFH511130077-02

- Install the sensor lever (2) and plate (3), then tighten screws securely.
- Ensure that the tip “B” of sensor lever (2) fits firmly into the sensor’s groove “A”.
- Secure lead wire with lead wire clamps (4), then check that lead wire routed properly.

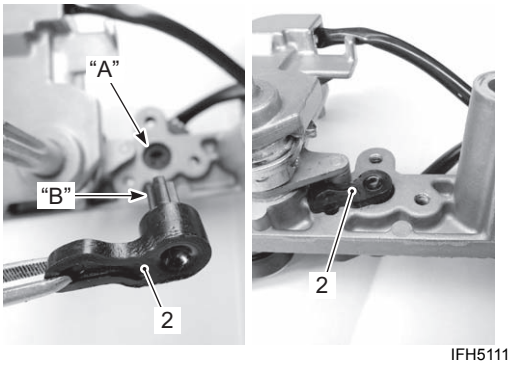

IFH511130078-03

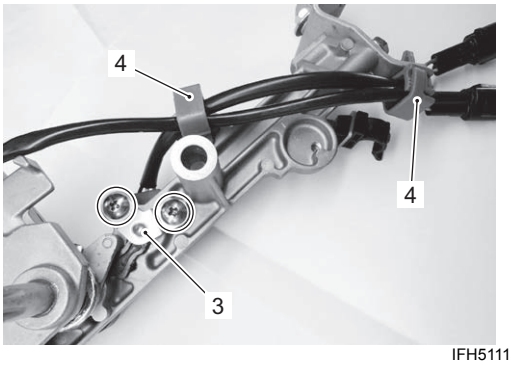

IFH511130079-03

- Install the throttle/clutch lever holder with neutral switch and shift position sensor, then tighten bolts securely.
- Install the fuel delivery pipe and intake manifold assembly.
  Refer to “Intake Manifold Removal and Installation” in Section 1D (Page 1D-8).
- Check to ensure that all removed parts are back in place.
- Check fuel and water hose routing.
  Refer to “Fuel Hose Routing” in Section 4B (Page 4B-1) and “Water Hose Routing” in Section 4B (Page 4B-6).
- Check wire routing.
  Refer to “Wiring Harness Routing Diagram” in Section 4A (Page 4A-2).
- Check for fuel leakage.
- Check for water leakage.

Shift Position Sensor Inspection

CENFH5111306040

1) Turn ignition switch OFF.
2) Connect the 36-pin test cord set between ECM and wire harness as shown in figure.

Special tool
TOOL (A): 09930–88730 (36-pin test cord set)

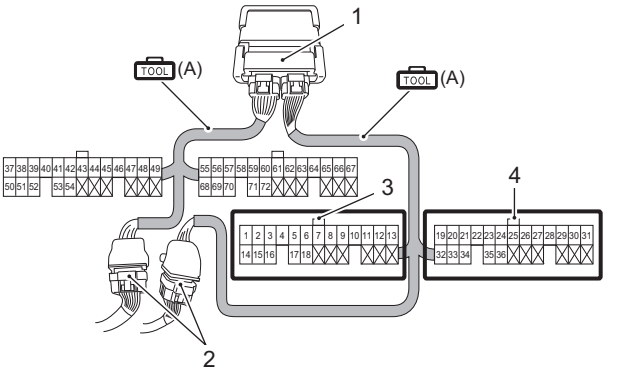

IFH511130016-03

1. ECM	3. White connector
2. Wire harness	4. Black connector

3) Connect tester probe (“+”, Red) to No. 8 terminal.
4) Connect tester probe (“–”, Black) to No. 31 terminal (or to body ground).

36-pin test cord (White connector)

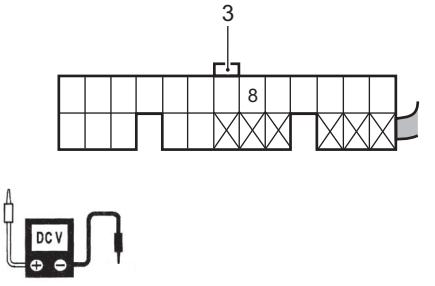

IFH511130051-02

36-pin test cord (Black connector)

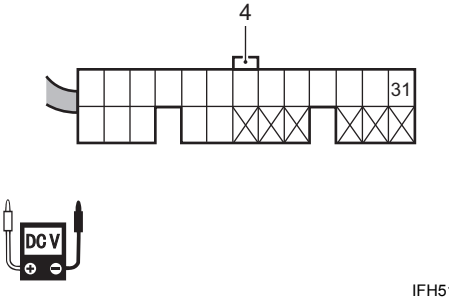

IFH511130052-02

5) Turn the ignition switch ON.
6) Check for sensor output voltage while operating remo-con handle.

Sensor output voltage

Shift position	Output voltage
Forward	Approx. 4 V
Neutral	Approx. 2 V
Reverse	Approx. 0.6 V

Special tool
TOOL : 09900–25008 (Multi circuit tester set)

Tester knob indication
DC voltage (⎓)

If out of specification:

- 1st check, sensor mount position, readjust if necessary.
- 2nd check, wire harnesses for open and short. If wire harnesses are in good condition, replace shift position sensor and recheck.

Trim Sensor Removal and Installation

CENFH5111306029

Removal

1) Turn the ignition switch OFF.
2) Remove lower side covers.
Refer to “Lower Side Cover Removal and Installation” in Section 2A (Page 2A-3).
3) Remove the bolts (1) securing front panel.

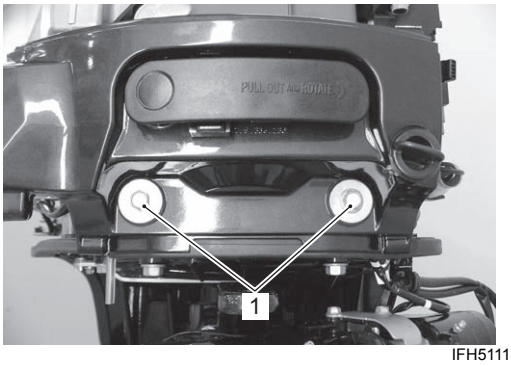

IFH511130080-01

4) Disconnect the trim sensor lead wire connector (2).

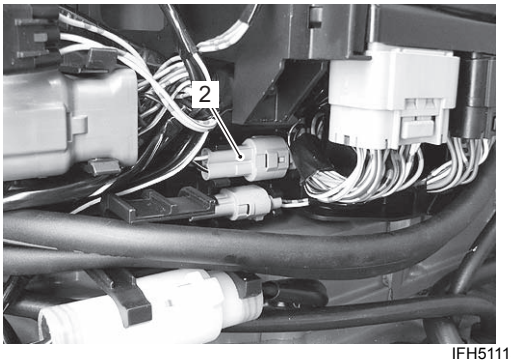

IFH511130081-01

5) Remove the pin (3) securing side cover seal. Remove the trim sensor lead wire (4) from side cover seal.

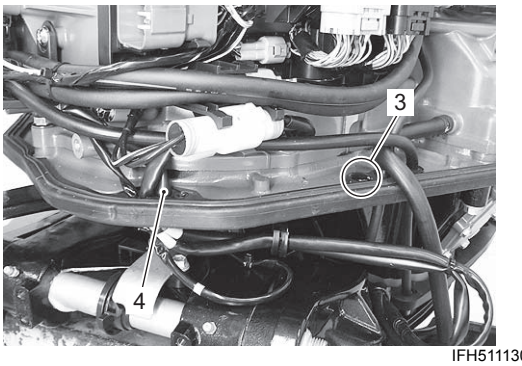

IFH511130082-02

6) Raise the engine to the full tilt up position and lower the manual tilt lock lever (5).

⚠ WARNING

Failure to take proper precaution when servicing trim sensor can cause severe personal injury.

During the removal or installation of trim sensor, the engine must be firmly secured and its weight fully supported by the hoist. (See below)

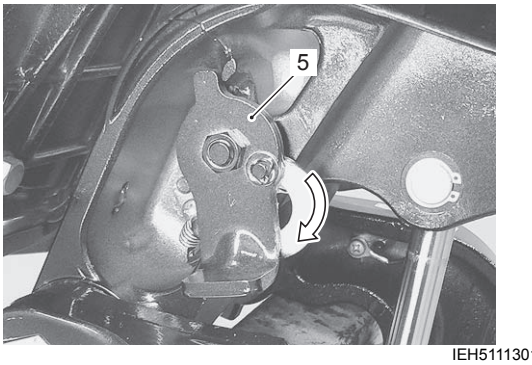

IEH511130114-01

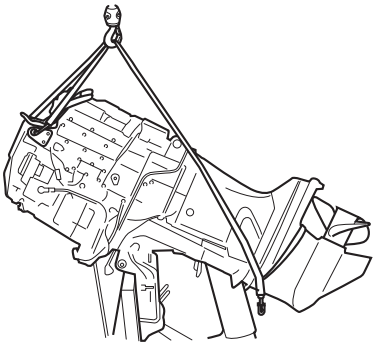

IEH511220010-01

7) Remove the bolts and trim sensor (6) from clamp bracket.

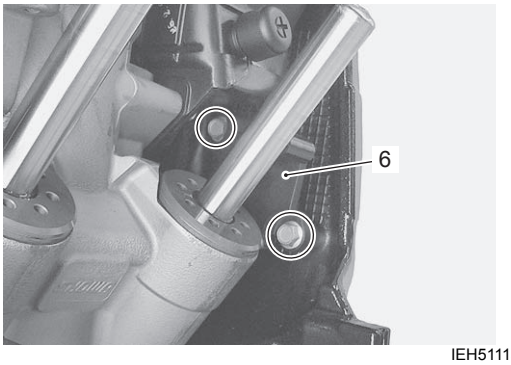

IEH511130089-02

Installation

Installation is reverse order of removal with special attention to the following step.

- Tighten the sensor mounting bolts, pre-coated with thread lock, to the specified torque.

Tightening torque
Trim sensor bolt (a): 6 N·m (0.6 kgf-m, 4.3 lbf-ft)

1342 : Thread lock cement 99000–32050 (SUZUKI Thread Lock 1342 (50 g))

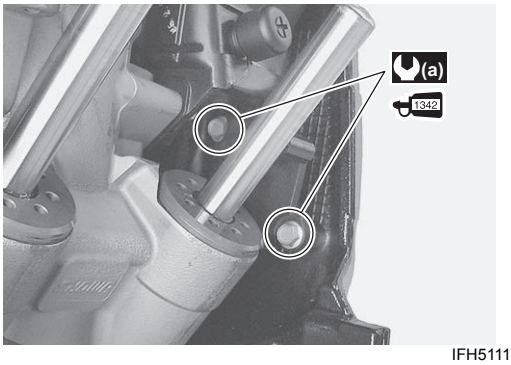

IFH511130053-01

- Route and clamp the trim sensor lead wire properly. Refer to “Wiring Harness Routing Diagram” in Section 4A (Page 4A-2).
- Perform the full trim down limit position setting.

Trim Sensor Inspection

CENFH5111306030

Inspect trim sensor in the following procedures:

1) Turn ignition switch OFF.
2) Connect the 36-pin test cord between ECM and wire harness as shown in figure.

Special tool
TOOL (A): 09930–88730 (36-pin test cord set)

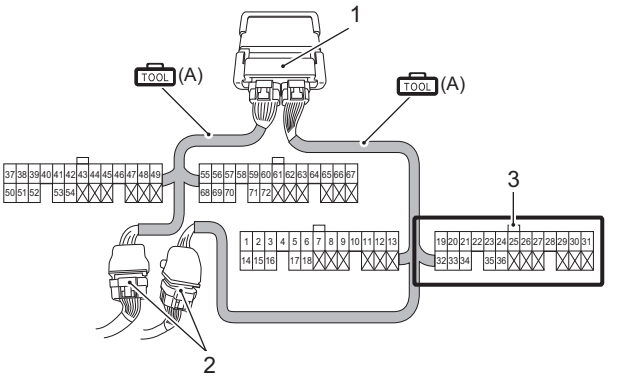

IFH511130023-01

1. ECM	3. Black connector
2. Wire harness	

3) Connect tester probe (“+”, Red) to No.28 terminal.
4) Connect tester probe (“–”, Black) to No.31 terminal (or to body ground).

36-pin test cord (Black connector)

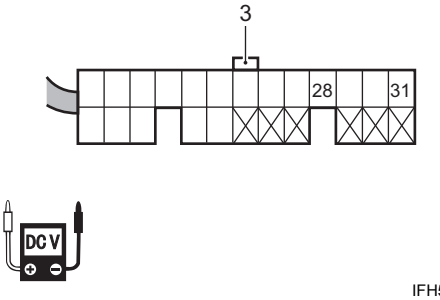

IFH511130020-02

Special tool
TOOL : 09900–25008 (Multi circuit tester set)

Tester knob indication
DC voltage (⎓)

5) Turn the ignition switch ON.
6) Check for sensor output voltage.
Operate the PTT switch, and check if voltage changes linearly within specification, according to trim/tilt position.

Sensor output voltage

Trim/Tilt position	Output voltage
Full trim down	Approx. 0.2 V
Full tilt up	Approx. 4 V

If out of specification, check wire harnesses for open and short. If wire harnesses are in good condition, replace trim sensor and recheck.

Emergency Stop Switch Inspection

CENFH5111306031

1) Disconnect the emergency stop switch lead wire.
2) Check the continuity/infinity between the wiring leads under the condition shown below.

Special tool
TOOL : 09900–25008 (Multi circuit tester set)

Tester knob indication
Continuity (•)))

	Tester probe connection		Tester indicates
	Red (+)	Black (–)	
Lock plate installed	Black	Black	Infinity
Lock plate removed			Continuity

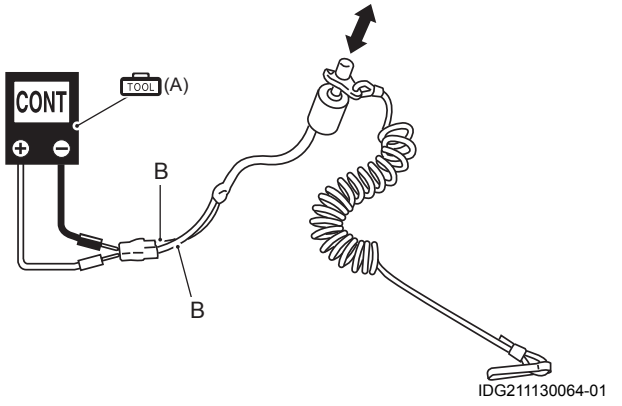

IDG211130064-01

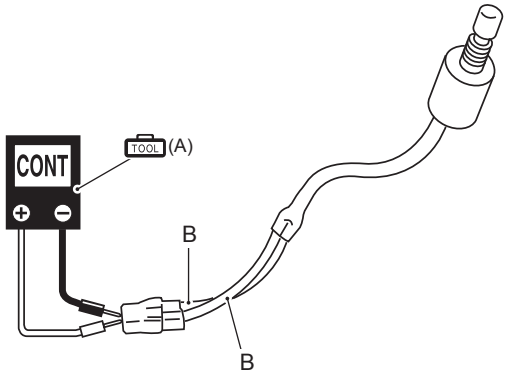

IDG211130065-01

3) If out of specification, replace the emergency stop switch.

Power Unit Mechanical

General Description

Power Unit Construction Description

CENFH5111401001

The power unit is direct water cooled, in line 4 cylinder, 4 stroke gasoline unit with its DOHC (Double overhead camshaft) valve mechanism for “V” type valve configuration and 16 valves (4 valves/one cylinder).
The double overhead camshaft is mounted over the cylinder head, it is driven from crankshaft through driven gear and timing chain, and no pushed rods are provided in the valve train system.

Powerhead Direction of Rotation

NOTE

This is a left hand (LH) rotation powerhead.

Cylinder Number

Cylinder number is as mentioned in figure.

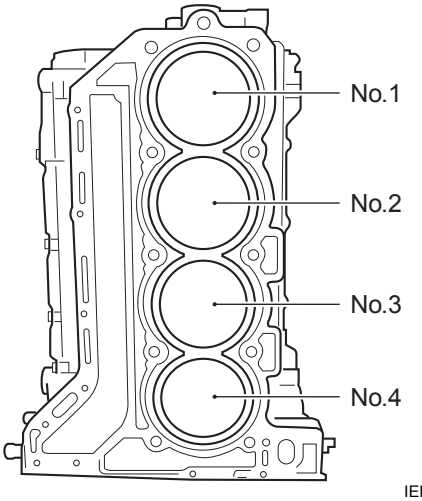

IEH511140373-06

Diagnostic Information and Procedures

Cylinder Compression Check

CENFH5111404001

Refer to “Cylinder Compression Pressure Check” in Section 0B (Page 0B-25).

Oil Pressure Check

CENFH5111404002

Refer to “Oil Pressure Check” in Section 0B (Page 0B-24).

Service Instructions

Tappet Clearance Inspection

CENFH5111406001

Refer to “Tappet Clearance Inspection and Adjustment” in Section 0B (Page 0B-9).

Ring Gear Cover Removal and Installation

CENFH5111406002

Removal

1) Disconnect battery cables from battery.
2) Loosen and remove the four bolts securing ring gear cover (1).

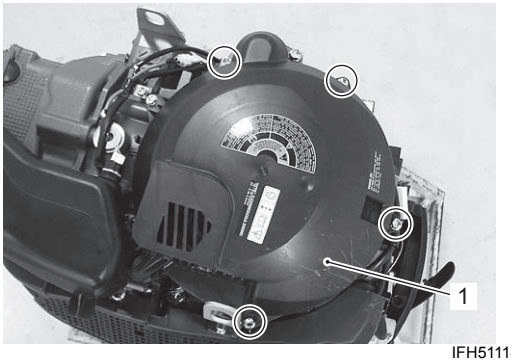

IFH511140030-01

3) Remove the ring gear cover.

Installation

Installation is reverse order of removal.

- Check that lead wire is routed properly.

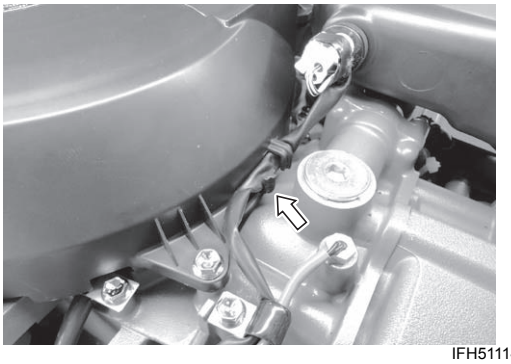

IFH511140031-02

Air Intake Silencer Case Removal and Installation

CENFH5111406038

Removal

1) Disconnect battery cables from battery.
2) Remove the lower side covers.
   Refer to “Lower Side Cover Removal and Installation” in Section 2A (Page 2A-3).
3) Remove the three bolts (1) securing resonator (2), then remove the resonator.

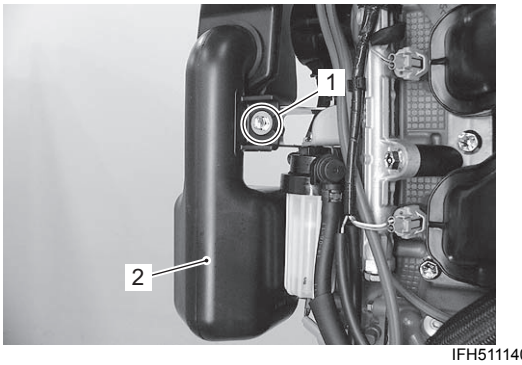

IFH511140032-02

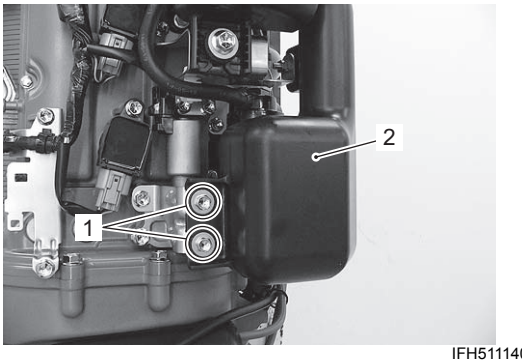

IFH511140033-01

4) Remove ring gear cover (3).
   Refer to “Ring Gear Cover Removal and Installation” (Page 1D-2).

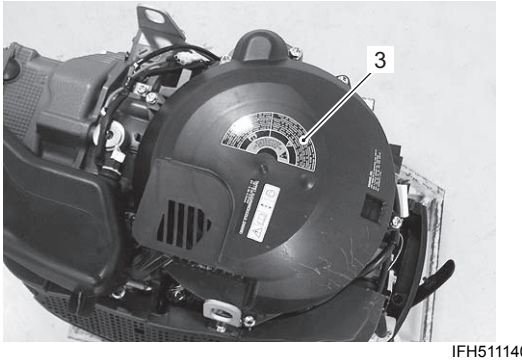

IFH511140034-01

5) Disconnect IAT sensor lead wire connector (4) at IAT sensor.

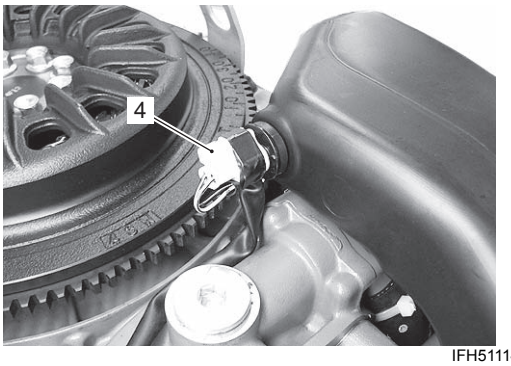

IFH511140035-01

6) Remove the two bolts (5) securing air intake silencer case (6).
7) Remove the air intake silencer case.

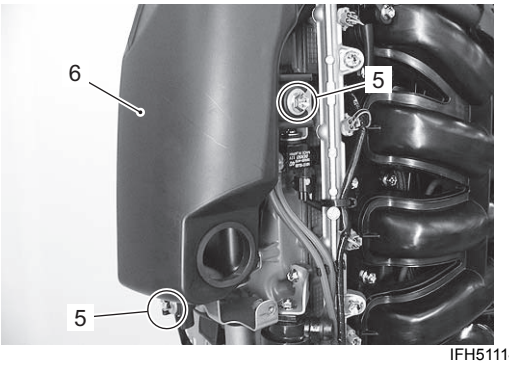

IFH511140036-01

8) Loosen the clamp securing breather hose (7), then remove the breather hose from cylinder head cover.

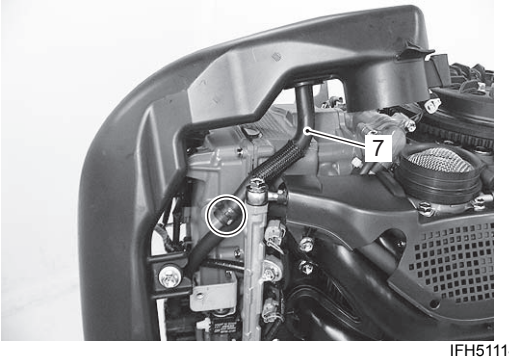

IFH511140037-01

Installation

Installation is reverse order of removal.
Check that all removed parts are back in original position.

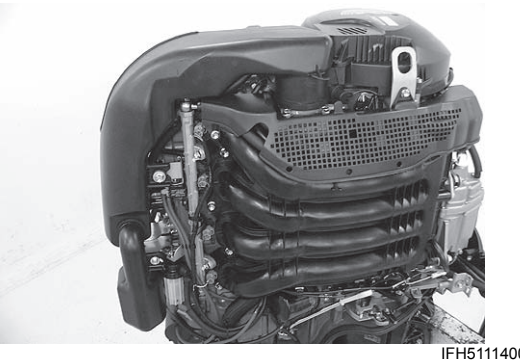

IFH511140038-01

Electric Parts Holder Removal and Installation

CENFH5111406003

Removal

1) Disconnect battery cables from battery.

⚠ CAUTION

Failure to take proper precaution when removing electrical parts may result in personal injury and/or damage to electronic components.

Prior to removing electrical parts, disconnect battery cables from battery.

2) Remove the lower side covers. Refer to “Lower Side Cover Removal and Installation” in Section 2A (Page 2A-3).
3) Remove two bolts (1) securing front panel.

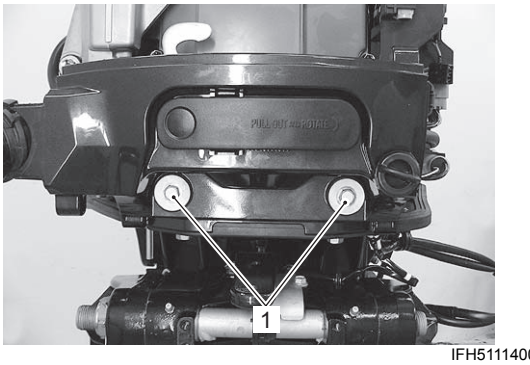

IFH511140039-01

4) Disconnect lead wire connectors (2) from ECM (3), then remove ECM.

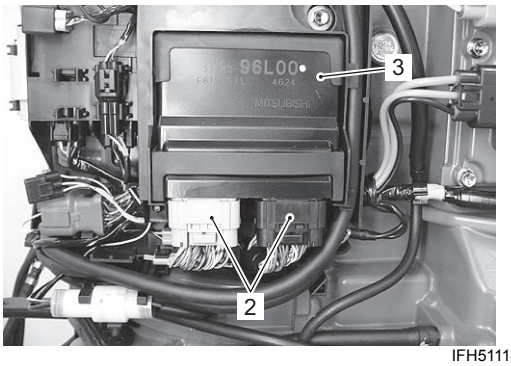

IFH511140040-01

5) Remove the nut (4), positive (+) battery cable (5) and positive lead wire (R) from magnetic switch (6) of starter motor.

6) Remove the bolt (7) securing negative (–) battery cable (8) and main harness GND.

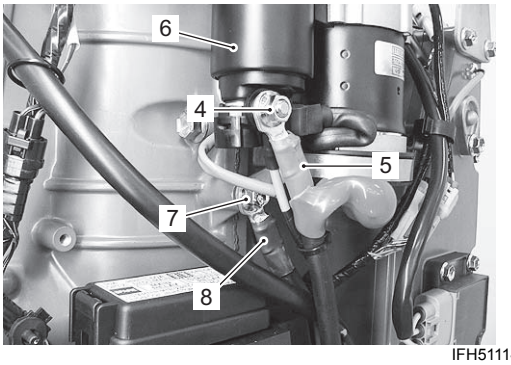

IFH511140041-01

7) Disconnect red lead wire (9) from magnetic switch terminal “S”.

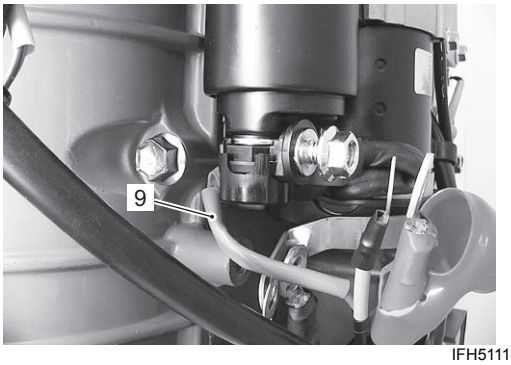

IFH511140042-01

8) Disconnect the evaporation hose (10) from outlet union.

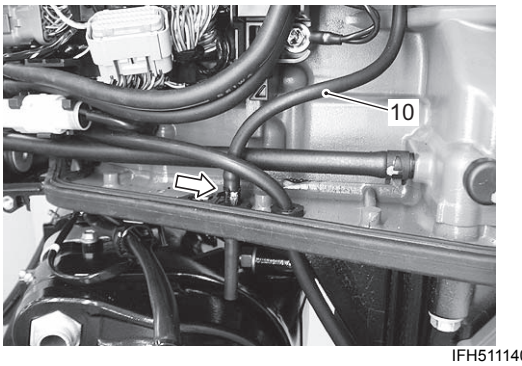

IFH511140043-02

9) Cut the cable tie (11) binding battery cable and main harness.

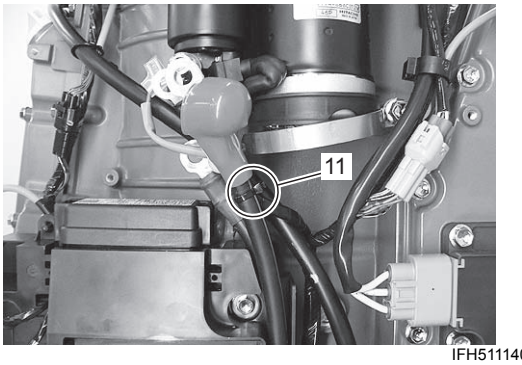

IFH511140044-01

10) Pull the battery cables (12) out from electric parts holder.

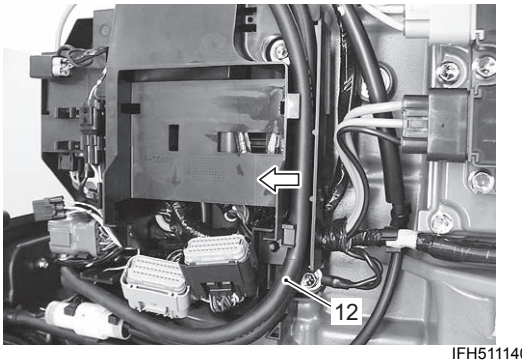

IFH511140045-01

11) Remove the SDS service connector (13) and main harness connector (14) from electric parts holder.

12) Disconnect the gauge connector (15).

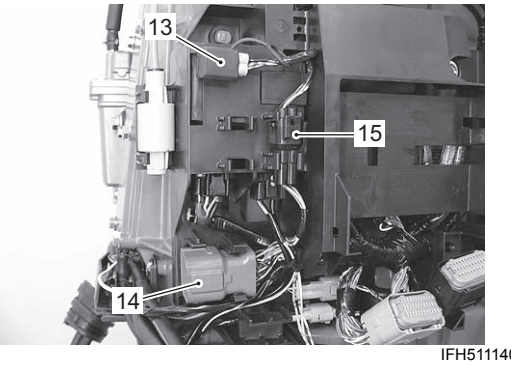

IFH511140046-01

13) Remove the isolator wire connector (16) from electric parts holder.
Remove the cable clamp (17) from electric parts holder by releasing clamp's lock.

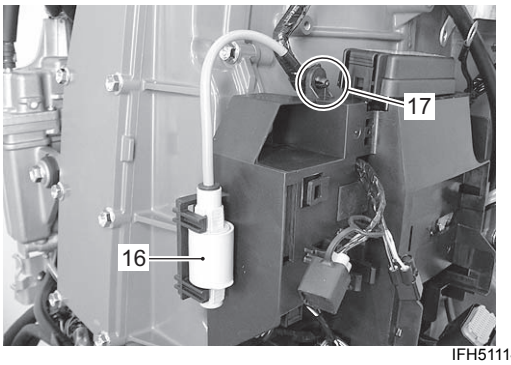

IFH511140047-01

14) Disconnect PTT motor cable connector (18).
Disconnect PTT relay lead wire connectors (19) at PTT relay.

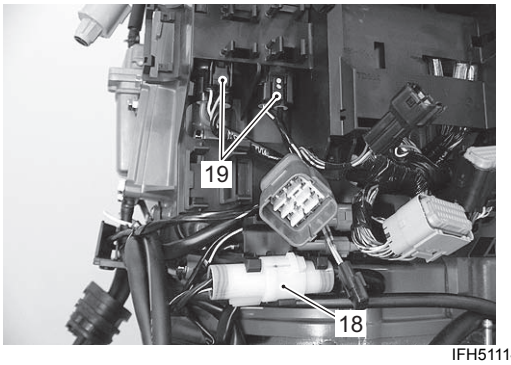

IFH511140048-01

15) Disconnect tilt limit switch lead wire connector (21) and trim sensor lead wire connector (22).

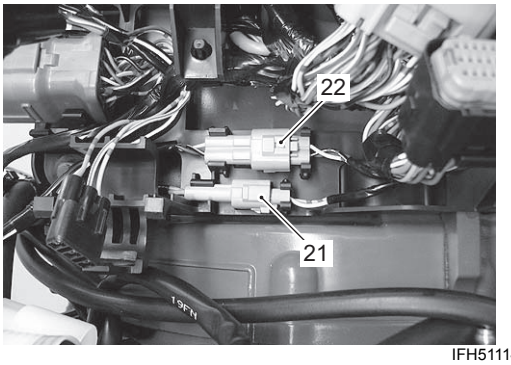

IFH511140049-01

16) Remove the two bolts (23) securing electric parts holder (24).
Slide the electric parts holder upward, then remove it from cylinder block.

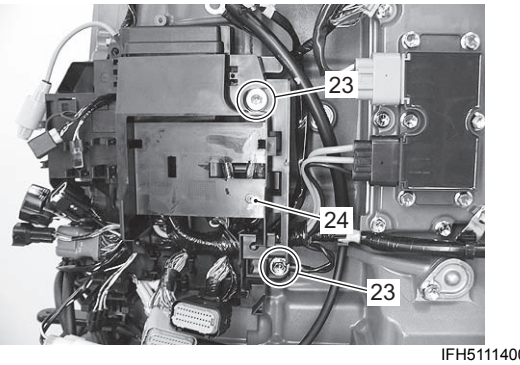

IFH511140050-02

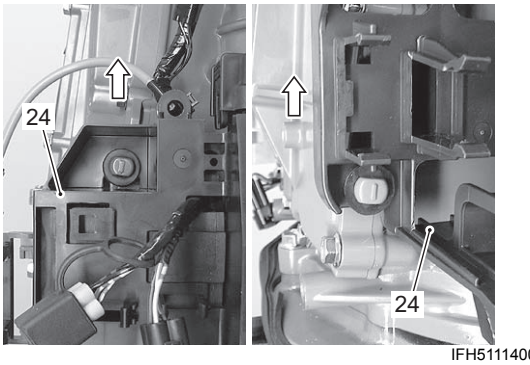

IFH511140051-01

17) To free the electric parts holder;
a) Remove the cable clamp (25) and (26) from electric parts holder by releasing clamps' lock.

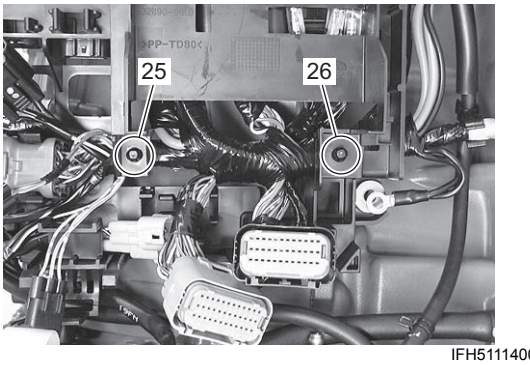

IFH511140052-01

b) Push and remove the fuse box (27) from electric parts holder.

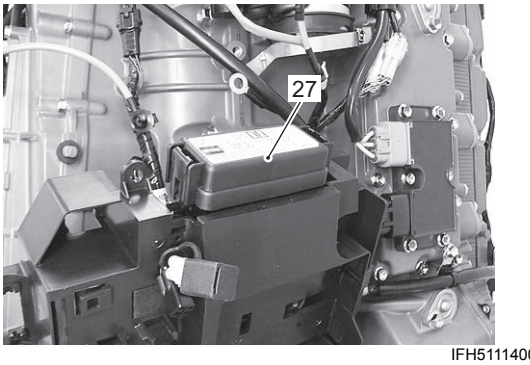

IFH511140053-01

c) Remove the PTT motor relay (28) from parts holder.

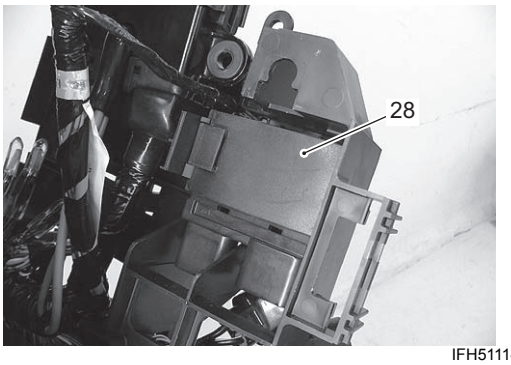

IFH511140054-01

d) Remove the joint connector (29) from parts holder.

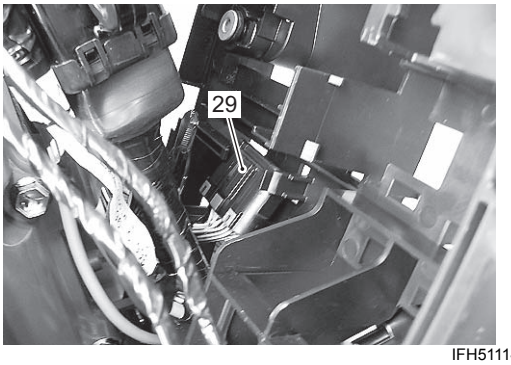

IFH511140055-01

e) Cut the cable tie (30) binding battery cable and lead wires.

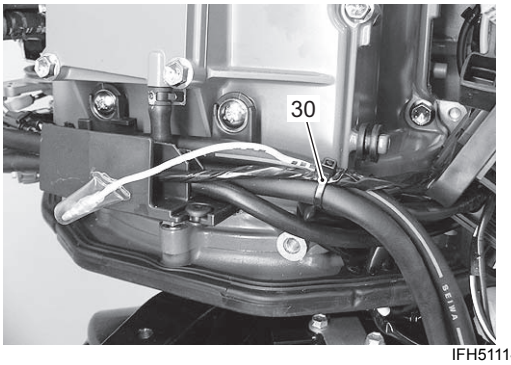

IFH511140056-01

f) Remove the screws (31) securing hose and harness holder.

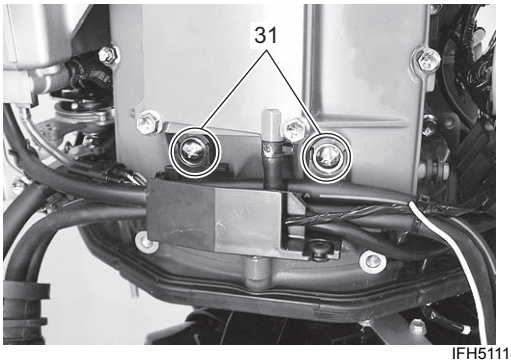

IFH511140057-01

g) Disconnect the neutral switch lead wire connector (32) and sift position sensor connector (33).
Cut the cable tie (34) binding battery cable and lead wire.

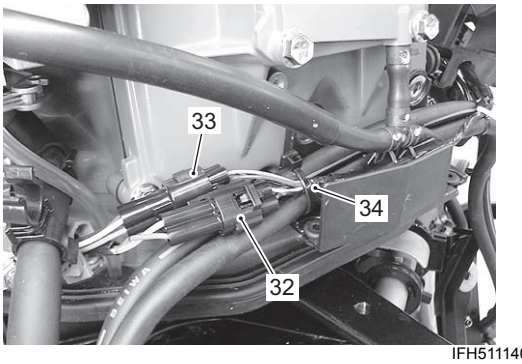

IFH511140058-03

h) Remove the all wiring harness from electric parts holder.

Installation

Installation is reverse order of removal with special attention to the following steps.

- Tighten the main harness ground lead terminal together with part-holder bolt “A”.

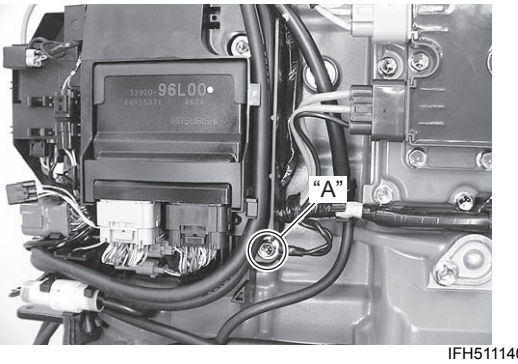

IFH511140059-02

- All parts removed have been returned to their original position.
- Check wire routing.
Refer to “Wiring Harness Routing Diagram” in Section 4A (Page 4A-2).

Intake Manifold and Throttle Body Components

CENFH5111406004

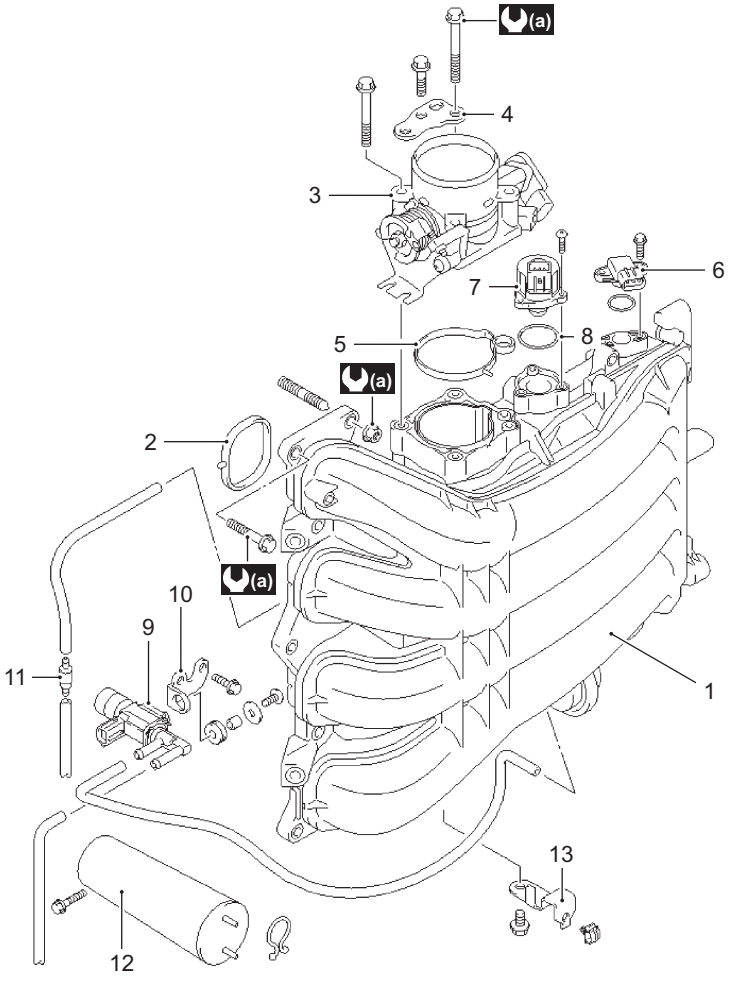

IFH511140001-01

1. Intake manifold assembly	5. Seal ring	9. VSV	13. Clamp bracket
2. Seal ring	6. MAP sensor	10. VSV bracket	(a): 23 N·m (2.3 kgf–m, 16.5 lbf-ft)
3. Throttle body	7. IAC valve	11. Check valve	
4. Throttle body bracket	8. O-ring	12. Vacuum tank	

Intake Manifold Removal and Installation

CENFH5111406005

Removal

1) Relieve fuel pressure.
   Refer to “Fuel Pressure Relief Procedure” in Section 1G (Page 1G-16).
2) Disconnect battery cables from battery.
3) Remove both side covers.
   Refer to “Lower Side Cover Removal and Installation” in Section 2A (Page 2A-3).
4) Remove ring gear cover and air intake silencer case (1).
   Refer to “Ring Gear Cover Removal and Installation” (Page 1D-2) and “Air Intake Silencer Case Removal and Installation” (Page 1D-2).
5) Loosen the three bolts and remove the fuel hose guard (2).

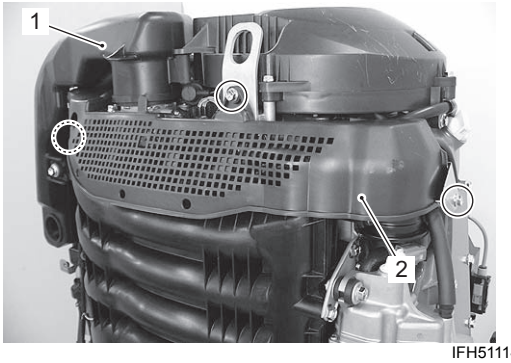

IFH511140060-02

6) Remove fuel vapor separator (3).
   Refer to “Fuel Vapor Separator Removal and Installation” in Section 1G (Page 1G-18).

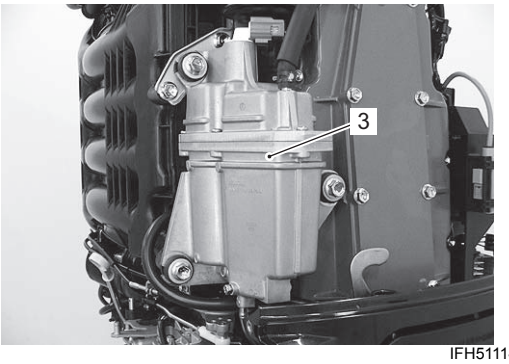

IFH511140061-01

7) Remove the bolts and high pressure fuel filter (4).
   Refer to “High Pressure Fuel Filter Removal and Installation” in Section 1G (Page 1G-30).

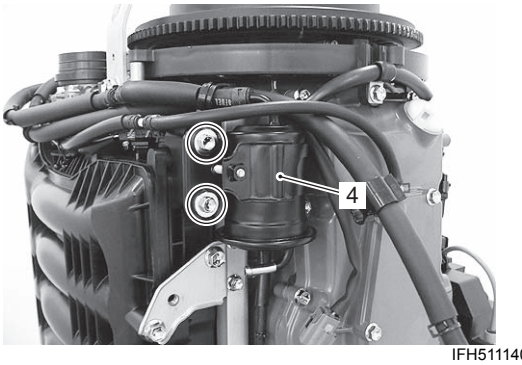

IFH511140062-01

8) Remove fuel injectors and fuel delivery pipe (5).
   Refer to “Fuel Injector Removal and Installation” in Section 1G (Page 1G-26).

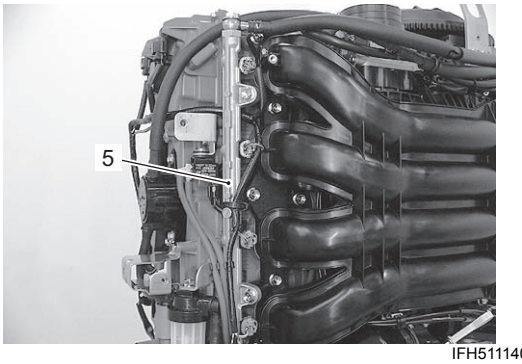

IFH511140063-01

9) Remove the throttle link rod (6) from throttle drum (7).
   Remove the bolts securing throttle drum to intake manifold.

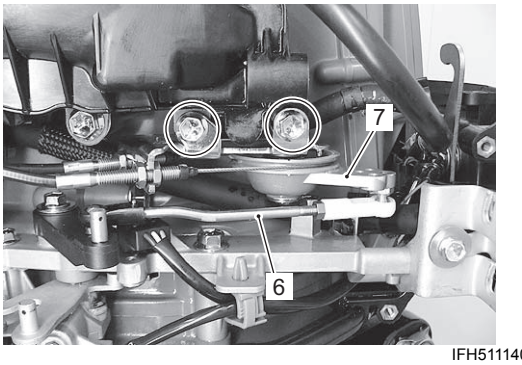

IFH511140064-01

10) Disconnect the throttle position sensor lead wire connector (8) at sensor.
Disconnect the IAC valve lead wire connector (9) at IAC valve.

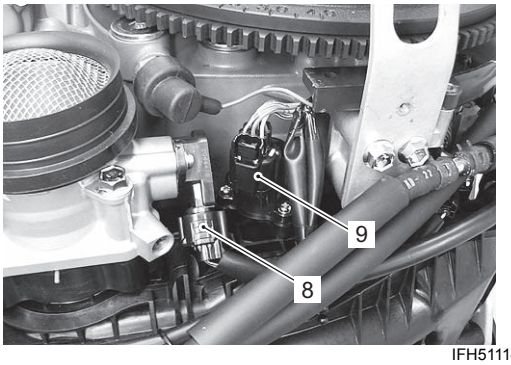

IFH511140065-02

11) Disconnect water inlet hose (10) from fuel cooler.

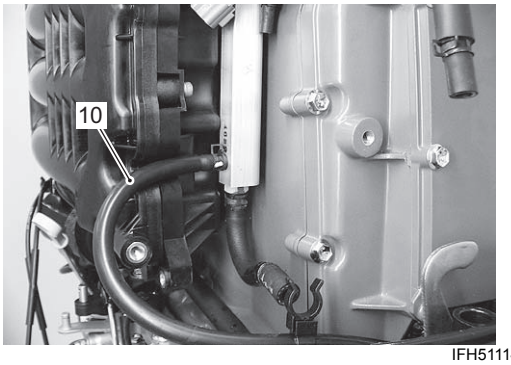

IFH511140066-01

12) Disconnect MAP sensor connector (11) at sensor.
Disconnect water outlet hose (12) from fuel cooler.
Disconnect fuel hose (13) from 3-way joint.

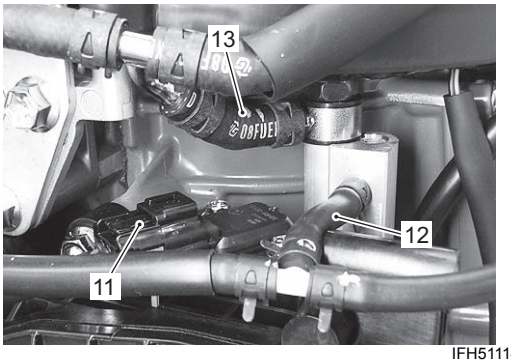

IFH511140067-01

13) Disconnect the vacuum hose (VSV to depression chamber) (14) from VSV.

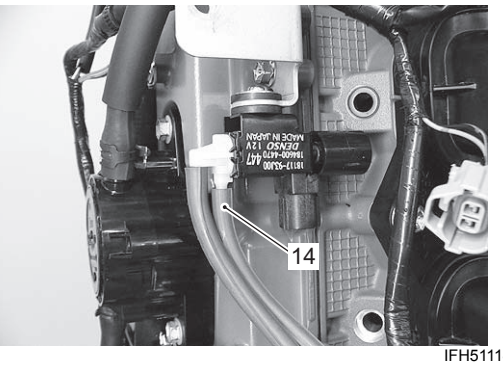

IFH511140068-01

14) Disconnect the vacuum hose (intake manifold to vacuum tank) (15) from vacuum tank.

15) Remove the bolt (16) securing water return union (17), then detach the union from engine holder.

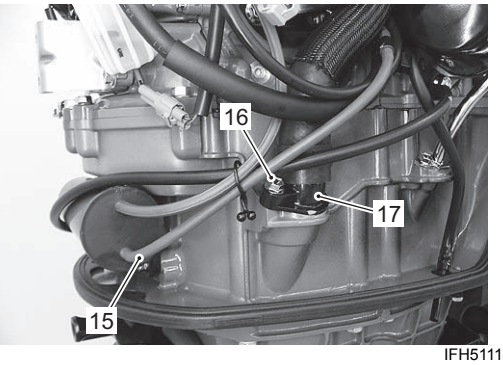

IFH511140069-01

16) Remove the bolts securing throttle body bracket (18) to cylinder.

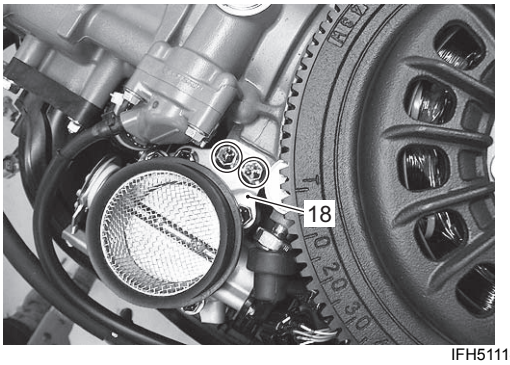

IFH511140070-01

17) Remove the engine oil dipstick (19).
18) Remove eight bolts and two nuts and then remove intake manifold assembly (20).

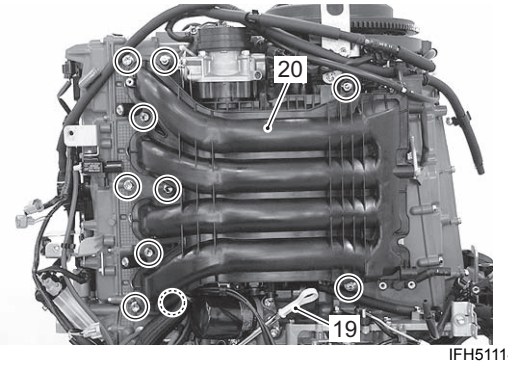

IFH511140071-01

Installation
Installation is reverse order of removal with special attention to the following steps.

NOTICE

Air leakage will induce a lean air/fuel mix which will result in severe engine damage.

Do not reuse gasket once removed. Always use a new one.

- Install gaskets (1) into groove of intake manifold assembly.

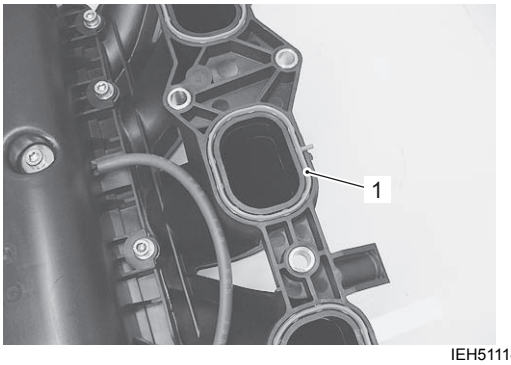

IEH511140040-06

- Install intake manifold assembly, then tighten bolts and nuts in the indicated order.

Tightening torque
Intake manifold bolt & nut (a): 23 N·m (2.3 kgf-m, 16.5 lbf-ft)

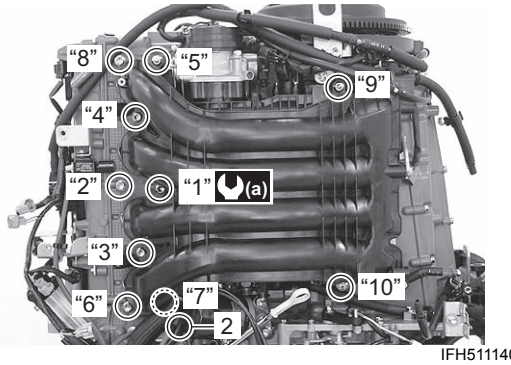

IFH511140072-02

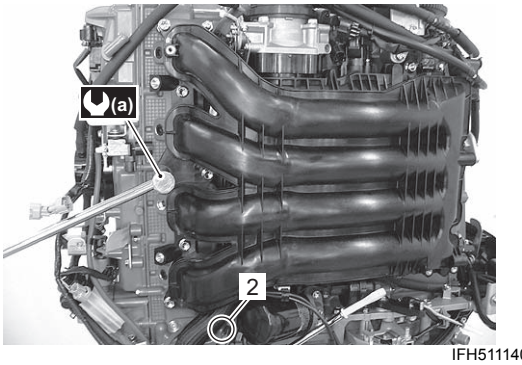

IFH511140073-01

- Connect the check valve (2) between vacuum hoses as shown in the figure.

NOTE

The check valve is directional.
Refer to figure when connecting check valve between vacuum hoses.

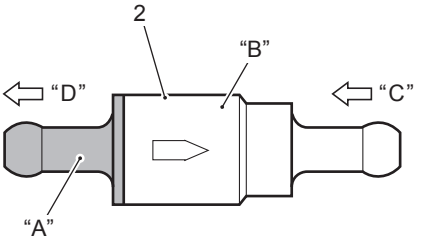

IEH511140042-08

2. Check valve	"C": From intake manifold assembly
"A": Green side	"D": To vacuum tank
"B": Black side	

- Install fuel injectors and fuel delivery pipe (3).
  Refer to “Fuel Injector Removal and Installation” in Section 1G (Page 1G-26).

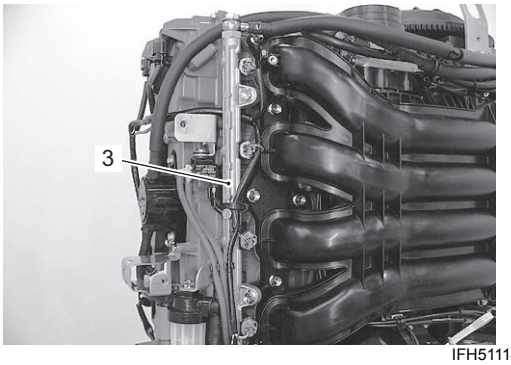

IFH511140074-01

- Install fuel vapor separator (4).
  Refer to “Fuel Vapor Separator Removal and Installation” in Section 1G (Page 1G-18).

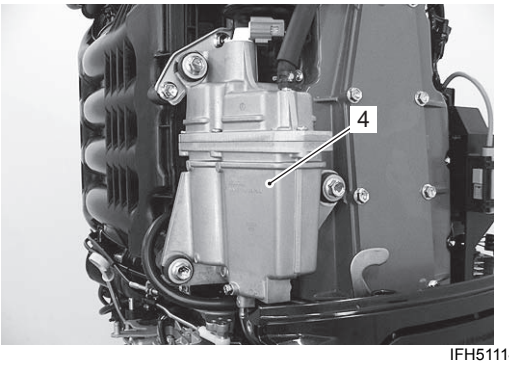

IFH511140076-01

- Install high pressure fuel filter (5).
  Refer to “High Pressure Fuel Filter Removal and Installation” in Section 1G (Page 1G-30).

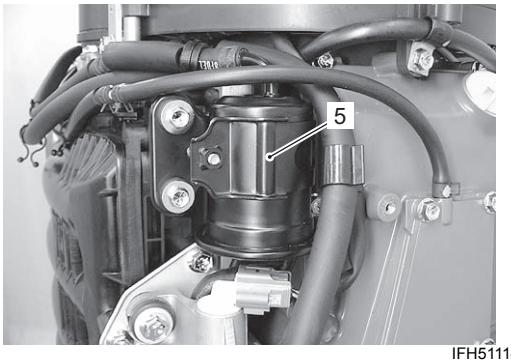

IFH511140077-01

- Check to ensure that all removed parts are back in place.
- Check fuel and water hose routing.
  Refer to “Fuel Hose Routing” in Section 4B (Page 4B-1) and “Water Hose Routing” in Section 4B (Page 4B-6).
- Check wire routing.
  Refer to “Wiring Harness Routing Diagram” in Section 4A (Page 4A-2).
- Check for fuel leakage.
- Check for water leakage.

Throttle Control Cable Installation and Adjustment

CENFH5111406039

Installation and adjustment procedures of the throttle control cables are as follows;

On throttle body side:

1) Install the open side throttle cable (1) to the throttle drum and cable holder (2).
   Secure the cable by tightening the cable lock nut (3).
2) Install the close side throttle cable (4) to the throttle drum and cable holder (2).
   Secure the cable by tightening the cable lock nut (5).

Throttle body side

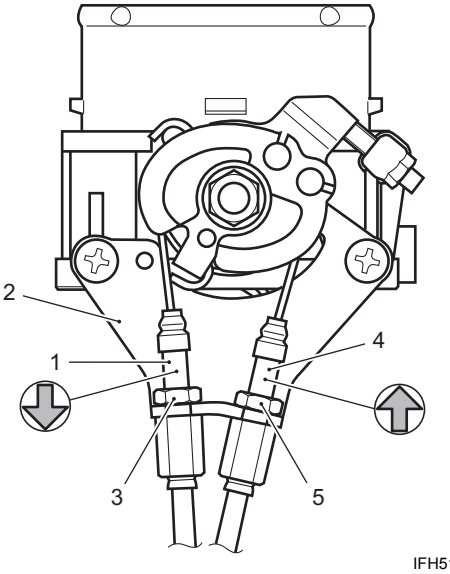

IFH511140027-01

On throttle cable bracket side:

1) Bind the open/close cables with the clamp (6) and secure them on the intake manifold (7) at the location as shown in the illustration.

NOTE

To ensure smooth operation of the throttle control system, the throttle cables must be positioned at the location as shown in the illustration prior to installing them on the throttle drum on the throttle cable bracket side.

2) Remove the throttle rod (8) from the throttle drum (9).
3) Remove the two bolts securing throttle cable bracket (10) to the intake manifold.
4) Install the close side throttle cable (4) to the throttle drum (9) and throttle cable bracket (10).
   Adjust the position of cable lock nuts (11) so that the alignment mark “A” on the throttle drum (9) is positioned 2 mm away from the alignment mark “B” on the throttle cable bracket (10) as shown in the illustration.
   Then secure the throttle cable (4) on the bracket by tightening the lock nuts (11).
5) Install the open side throttle cable (1) to the throttle drum (9) and throttle cable bracket (10).
   Adjust the position of cable lock nuts (12) so that the alignment mark “A” on the throttle drum (9) aligns with the alignment mark “B” on the throttle cable bracket (10) as shown in the illustration.
   Then secure the throttle cable (1) on the bracket by tightening the lock nuts (12).
6) Tighten the throttle cable bracket (10) to the intake manifold with two bolts.
7) Connect the throttle rod (8) to the throttle drum (9).
8) Operate the throttle lever (13) and check that the throttle valve opens and closes completely without interference.

NOTE

If the throttle valve does not operate smoothly or open/close completely, check for the throttle cable routing or inner cable tension.

Throttle cable bracket side

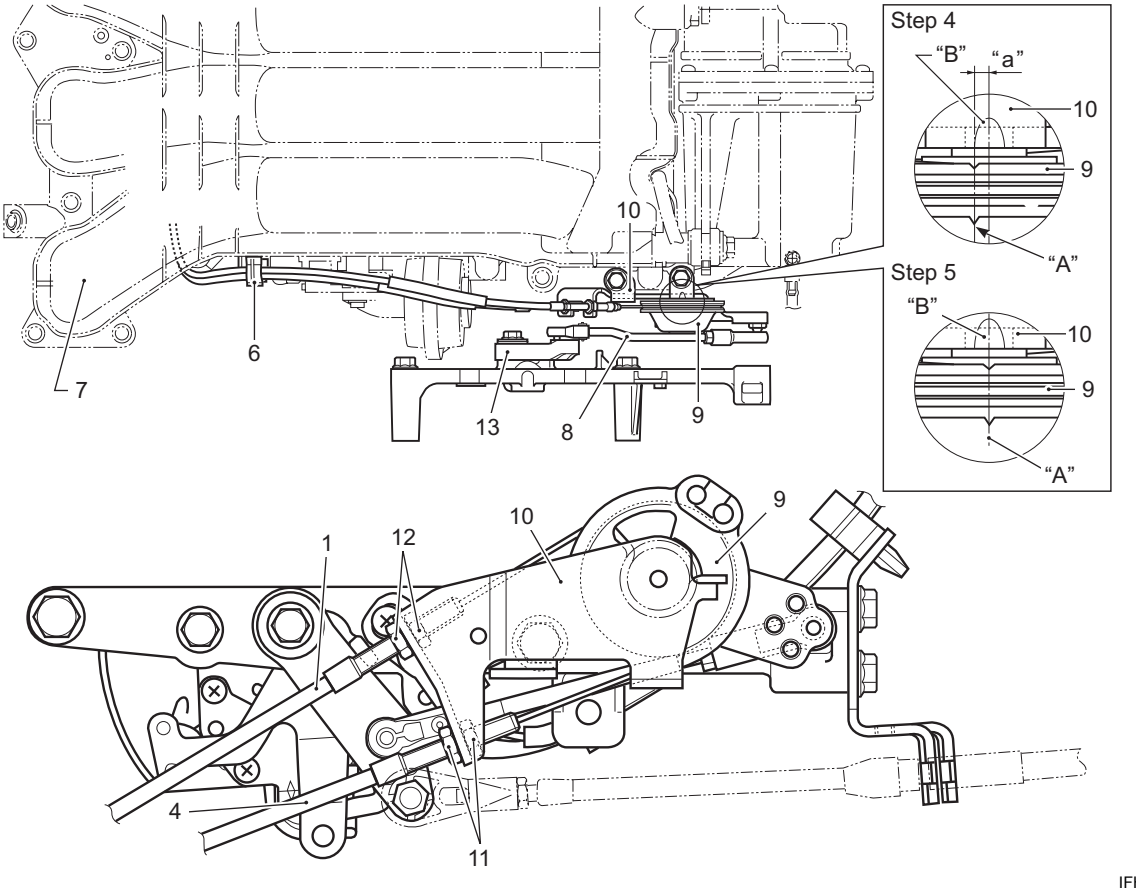

IFH511140028-04

“a”: 2 mm (0.08 in.)

Throttle Link Rod Adjustment

CENFH5111406040

When replacing a link rod and/or connector, see the illustration below to adjust the link rod length to specification.

NOTE

Tighten lock nut against the connector after adjusting the link rod length.

Throttle link rod length "L"
136 mm (5.4 in.)

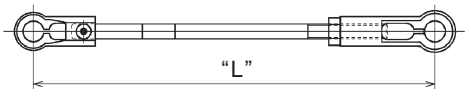

IFH511140029-02

Intake Manifold Disassembly and Assembly

CENFH5111406006

Disassembly

1) Remove bolts and fuel cooler (1).

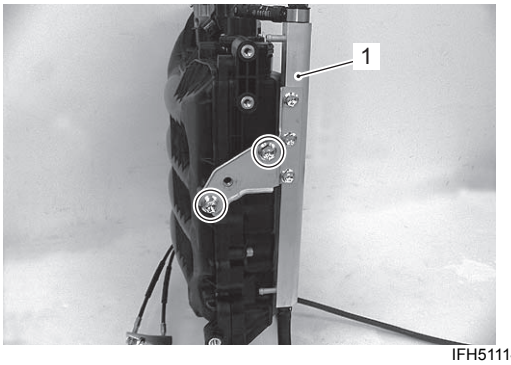

IFH511140078-01

2) Remove screws and MAP sensor (2).

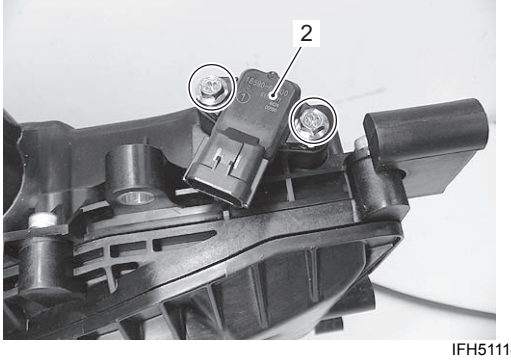

IFH511140079-01

3) Remove the screws and IAC valve (3).

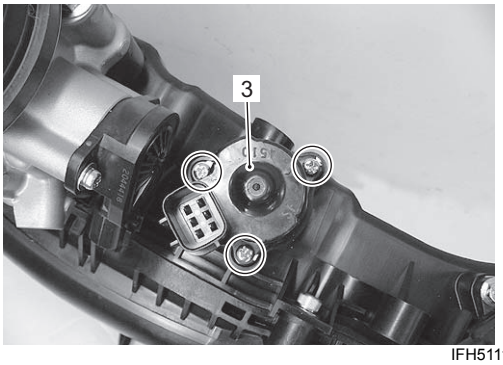

IFH511140080-01

4) Remove flame arrester (4).
Remove bolts and throttle body assembly (5).

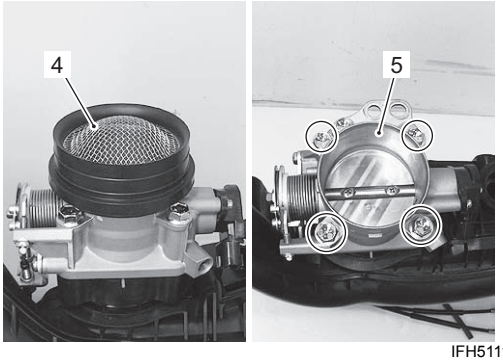

IFH511140081-01

NOTICE

Do not attempt to remove bolts and depression chamber (6).
If any repair is required on depression chamber, replace it as an intake manifold assembly.

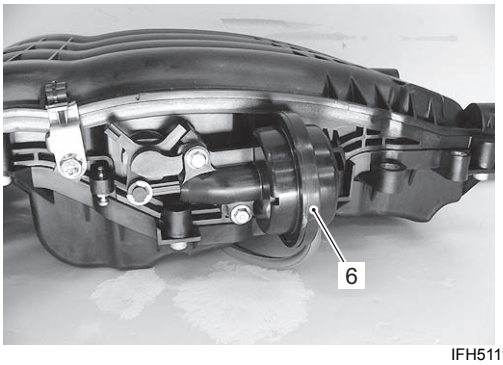

IFH511140082-01

NOTICE

Do not attempt to remove bolts and Intake manifold cover (7).
If any repair is required on intake manifold cover (7), replace it as an intake manifold assembly.

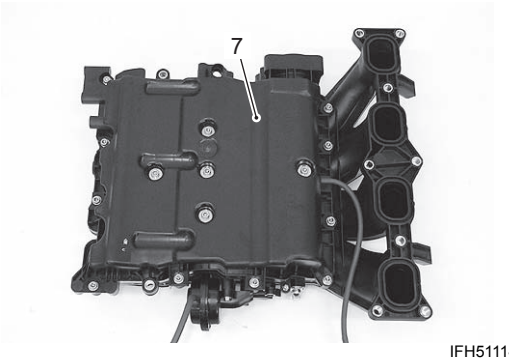

IFH511140083-01

Assembly
Reassemble in reverse order of disassembly paying special attention to the following steps.

- Install the throttle cables (1) to throttle drum (2) and cable bracket (3).
- Adjust of throttle control cable.
  Refer to “Throttle Control Cable Installation and Adjustment” (Page 1D-11).

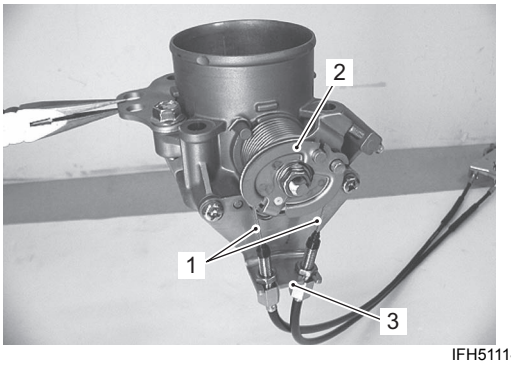

IFH511140084-02

NOTICE

Air leakage will induce a lean air/fuel mix which will result in severe engine damage.

Do not reuse gasket/seal ring once removed. Always use a new one.

- Install new seal ring (4) and throttle body. Securely tighten the four throttle body bolts to specified torque.

Tightening torque
Throttle body bolt (a): 23 N·m (2.3 kgf-m, 16.5 lbf-ft)

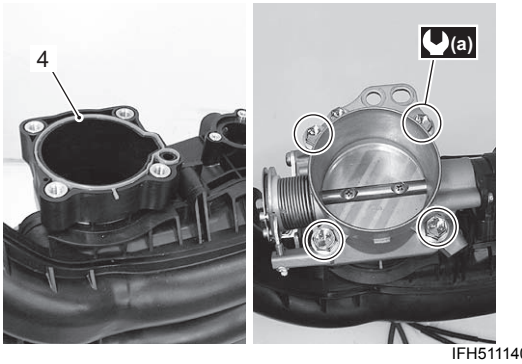

IFH511140085-01

- Install the MAP sensor (5), then tighten mounting screws securely.

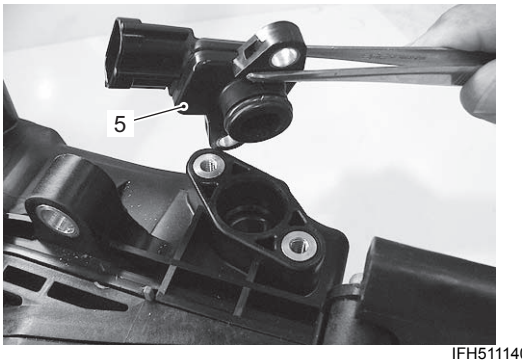

IFH511140086-01

- Install the IAC valve (6), then tighten mounting screws securely.

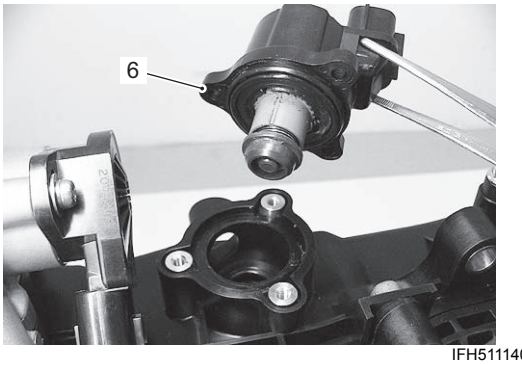

IFH511140087-01

Intake Manifold Component Inspection

CENFH5111406007

Depression Chamber

1) Remove the PORT lower side cover.
   Refer to “Lower Side Cover Removal and Installation” in Section 2A (Page 2A-3).
2) Check the depression chamber lever (1) is moved by vacuum to fully closed position after engine is started.

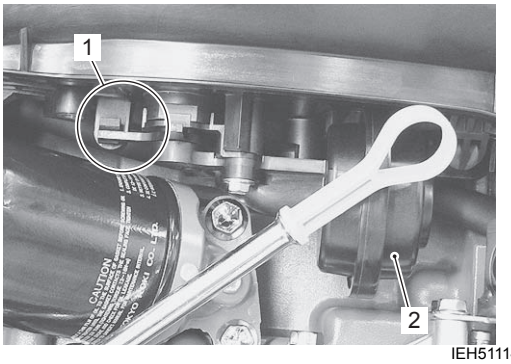

IEH511140120-06

1. Depression chamber lever	2. Depression chamber

3) Check the depression chamber lever (1) returns by spring to fully opened position when engine is turned off.

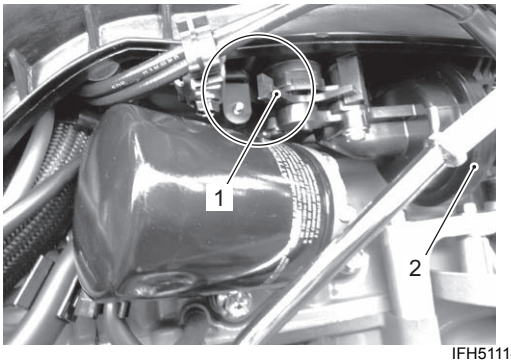

IFH511140088-02

1. Depression chamber lever	2. Depression chamber

4) Disconnect the vacuum hose (VSV to depression chamber) (3) from VSV.

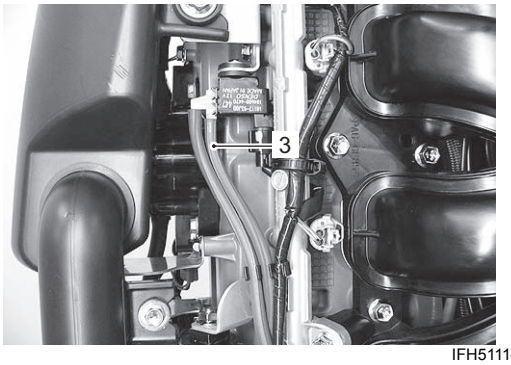

IFH511140089-01

5) Connect the vacuum hose (3) to special tool.

Special tool
TOOL (A): 09917–47011 (Vacuum pump gauge)

6) Check the depression chamber lever (1) is moved to fully closed position when vacuum is applied to depression chamber with a special tool.
   If the lever does not smoothly move, replace intake manifold assembly.

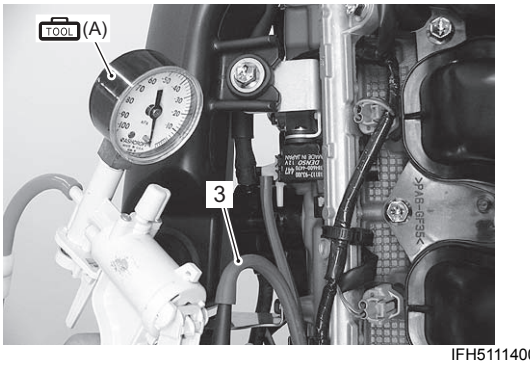

IFH511140091-01

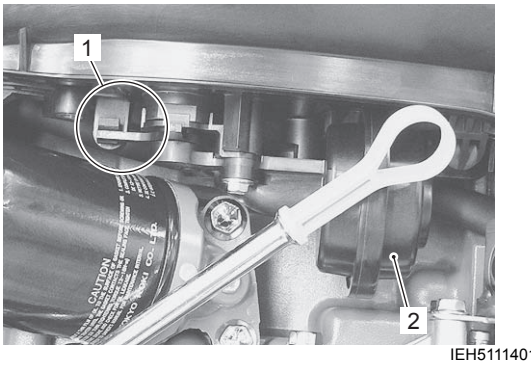

IEH511140120-06

1. Depression chamber lever	2. Depression chamber

7) Install removed parts in original position.

Vacuum Passage

1) Disconnect vacuum hose (VSV to vacuum tank) (1) from VSV.

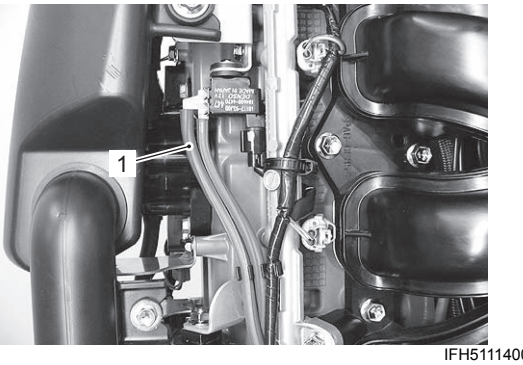

IFH511140092-01

2) Start engine and run it at idle speed.
Place a finger over vacuum hose end (1) and engine vacuum is present.
If vacuum is not present, clean vacuum passage with compressed air, start engine and check again for vacuum.

Check Valve

1) Remove check valve (1).

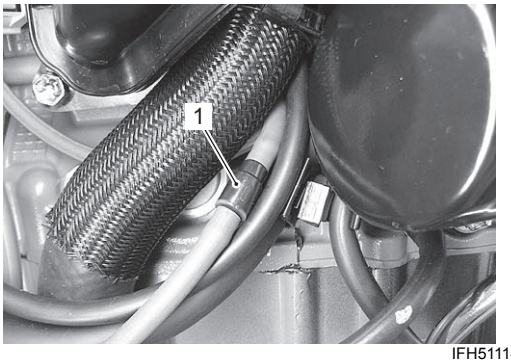

IFH511140093-01

2) Blow air (moderate pressure) through hose fitting on black side “A” of check valve. Air should not pass through valve from intake manifold (black side “A”) to green side “B”.
3) Blow air (low pressure) through hose fitting on green side “B” of check valve. Air should pass through to black side.
If air passes through valve in Step 2 or high pressure is required to cause air to pass in Step 3, replace check valve.

⚠ WARNING

If vacuum is applied using your mouth, there is a risk of inhaling harmful fuel vapor.

Be sure to use a hand vacuum pump to apply vacuum.

4) Install check valve.

NOTE

The check valve is directional. Refer to the figure for correct installation.

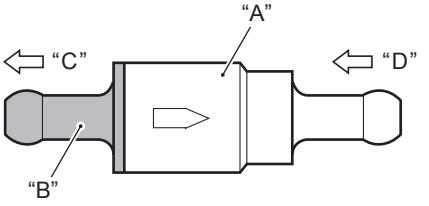

IEH511140048-07

“A”: Black side	“C”: To vacuum tank
“B”: Green side	“D”: From intake manifold

Throttle Body Removal and Installation

CENFH5111406008

NOTICE

The throttle body will lose its original performance if it is disassembled.

Do not try to disassemble the throttle body.

Refer to “Intake Manifold Removal and Installation” (Page 1D-8) and “Intake Manifold Disassembly and Assembly” (Page 1D-13).

Throttle Body Inspection

CENFH5111406009

NOTICE

The throttle body will lose its original performance if it has been disassembled and reassembled.

- **Do not try to disassemble the throttle body.**
- **Do not try to adjust or remove any of the throttle body component parts (Throttle position sensor, throttle valve, throttle stop screw, etc.).**
These components have been factory adjusted to precise specifications.

- Clean throttle body bore by compressed air.
- Check that if there is any foreign dust or carbon caught at the passage between throttle valve and throttle body housing.
If there is, clean the passage inside of throttle body by compressed air thoroughly.
- Check that throttle valve moves smoothly.

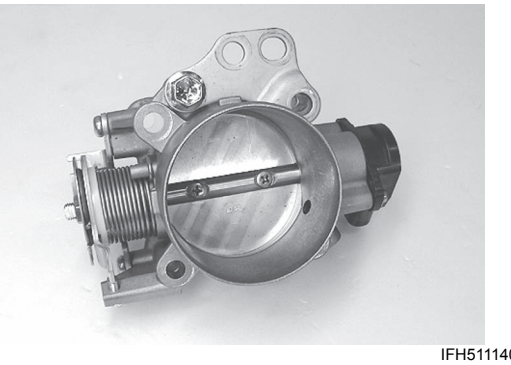

IFH511140094-02

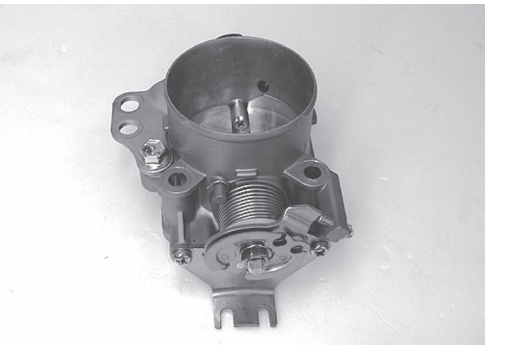

IFH511140095-02

Cylinder Head Cover Removal and Installation

CENFH5111406010

Removal

1) Disconnect battery cables from battery.
2) Remove both side covers.
   Refer to “Lower Side Cover Removal and Installation” in Section 2A (Page 2A-3).
3) Remove the resonator and air intake silencer case (1).
   Refer to “Air Intake Silencer Case Removal and Installation” (Page 1D-2).

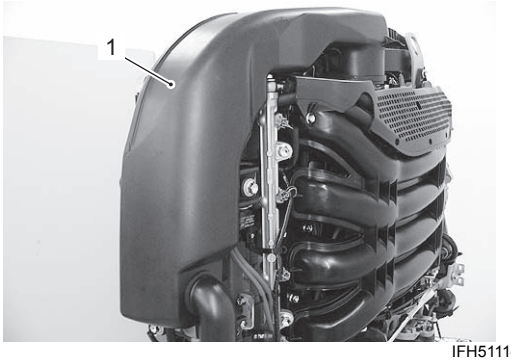

IFH511140096-01

4) Disconnect CMP sensor lead wire connectors (2) at sensor.

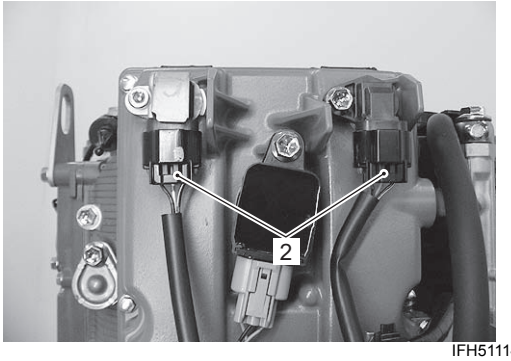

IFH511140097-01

5) Disconnect ignition coil connectors (3).
   Remove the bolts securing the ignition coils.
   Remove all ignition coils (4) and spark plugs.

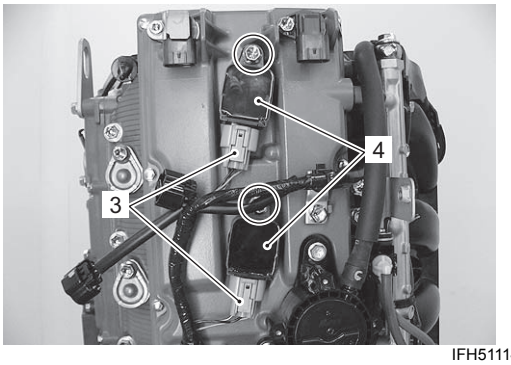

IFH511140098-02

6) Remove the bolts and low pressure fuel pump (5).
   Refer to “Low Pressure Fuel Pump Removal and Installation” in Section 1G (Page 1G-28).

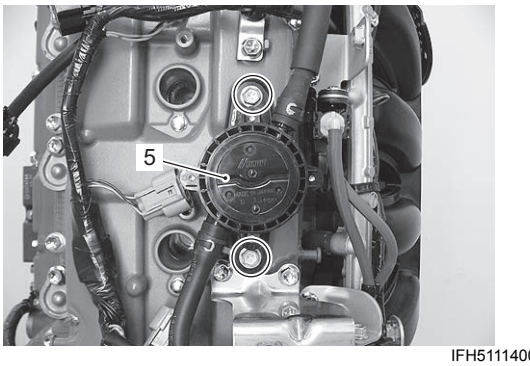

IFH511140099-01

7) Remove the bolt and harness bracket (6).
8) Remove the bolts and VSV bracket (7).
   Disconnect VSV lead wire connector (8) at VSV.

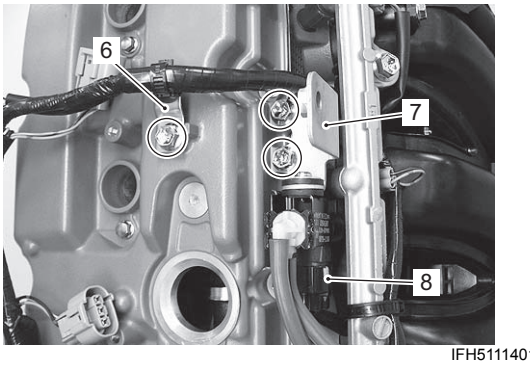

IFH511140100-01

9) Remove the hose clamp (9) from resonator bracket (10) by releasing clamp’s lock.
   Remove the bolts and resonator bracket.

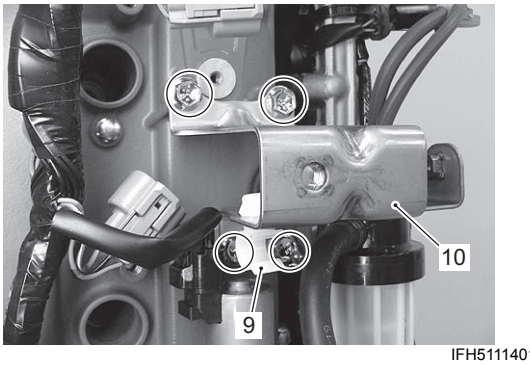

IFH511140101-01

10) Remove the nut and low pressure fuel filter (11) from filter bracket (12). Remove the bolts and filter bracket.

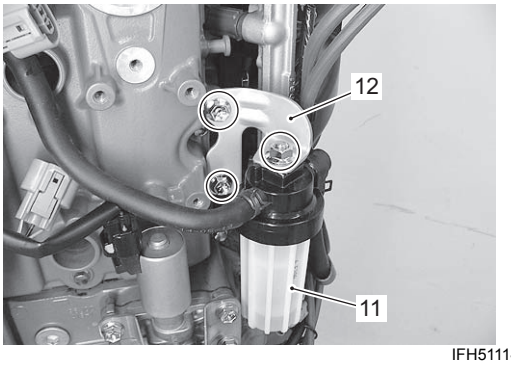

IFH511140102-01

11) Disconnect OCV lead wire connector at OCV (13). Remove the bolts, OCV (Oil Control Valve) and bracket (14), then discard OCV gasket.

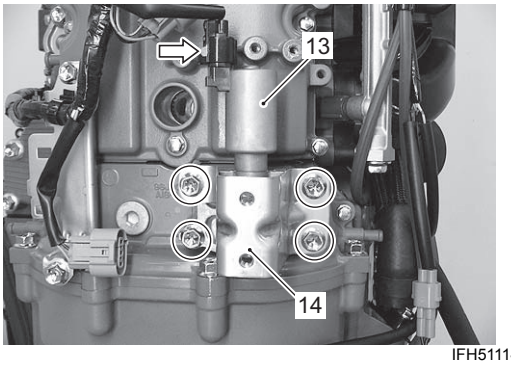

IFH511140103-01

12) Remove the bolts securing harness bracket (15).

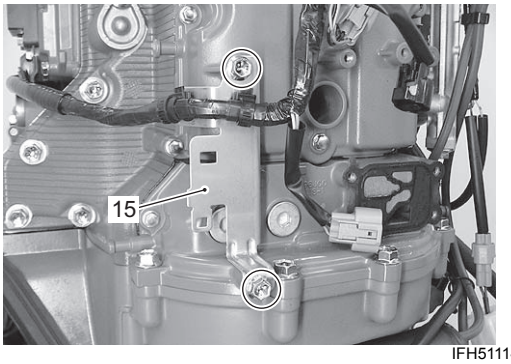

IFH511140104-01

13) Loosen the fourteen bolts securing cylinder head cover in ascending order of numbers, then remove the cylinder head cover.

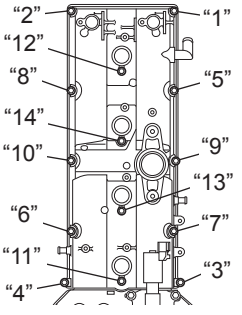

IEH511140061-06

Installation

Installation is reverse order of removal with special attention to the following steps.

- Clean sealing surface on cylinder head and cover. Remove oil, old sealant and dust from sealing surface.
- After cleaning, apply sealant to cylinder head sealing surface area as shown in figure.

1207B : Sealant 99000–31140 (SUZUKI Bond 1207B (100 g))

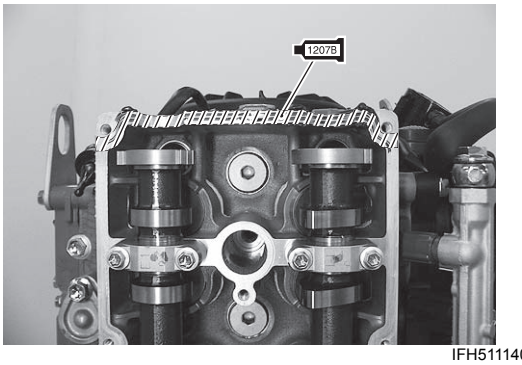

IFH511140105-02

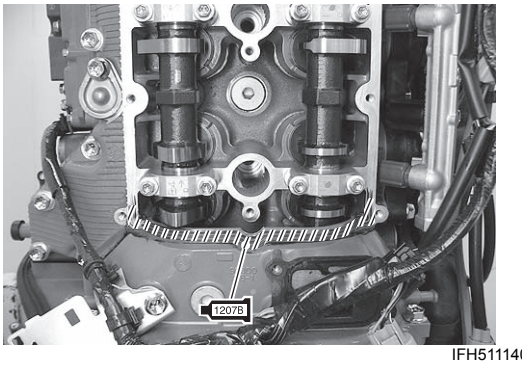

IFH511140106-02

- Install new cylinder head cover gasket (1) to head cover.

NOTICE

A previously used gasket may leak, resulting in engine damage.

Do not reuse gasket once removed. Always use a new one.

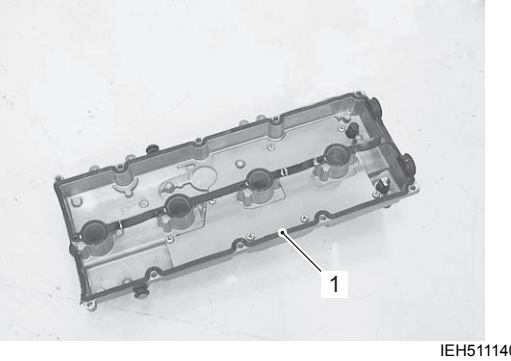

IEH511140064-06

- Install cylinder head cover (2) to cylinder head, then tighten cylinder head cover bolts in ascending order of numbers.

  Tightening torque
  Cylinder head cover bolt (a): 11 N·m (1.1 kgf-m, 8.0 lbf-ft)

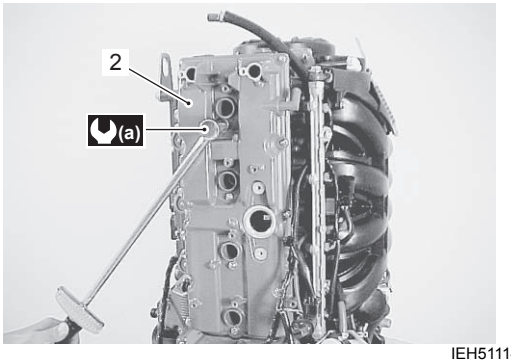

IEH511140065-05

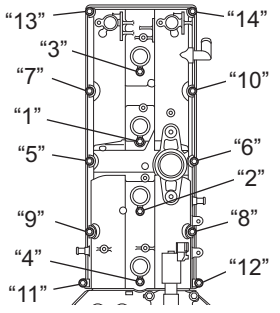

IEH511140066-05

- Install new gasket and OCV, then tighten bolts securely.
  Refer to "OCV (Oil Control Valve) Removal and Installation" (Page 1D-19).
- All parts removed have been returned to their original positions.
- Check wire routing.
  Refer to "Wiring Harness Routing Diagram" in Section 4A (Page 4A-2).
- Check fuel hose routing.
  Refer to "Fuel Hose Routing" in Section 4B (Page 4B-1).

OCV (Oil Control Valve) Removal and Installation

CENFH5111406011

Removal

1) Remove lower side covers.
   Refer to "Lower Side Cover Removal and Installation" in Section 2A (Page 2A-3).
2) Remove the three bolts (1) securing resonator (2), then remove the resonator.

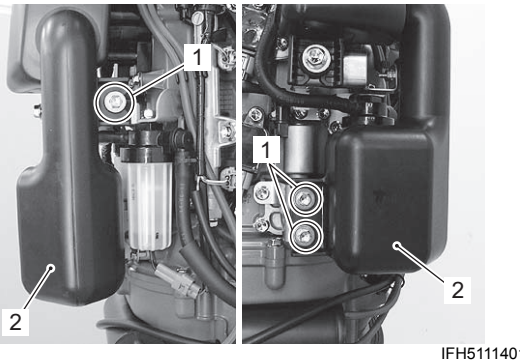

IFH511140107-02

3) Disconnect OCV lead wire connector (3) at OCV.
4) Remove the four bolts securing OCV (4), then remove OCV and resonator bracket (5).
   Discard OCV gasket.

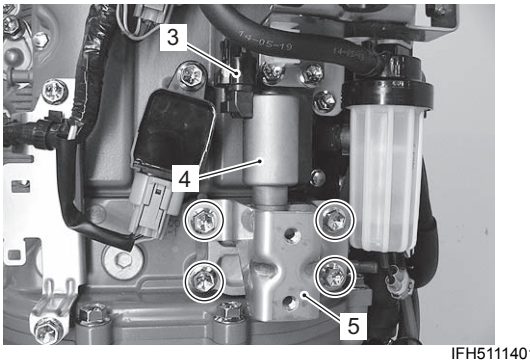

IFH511140108-01

Installation
Installation is reverse order of removal with special attention to the following steps.

- Install new gasket (1).

NOTICE

A previously used gasket may leak, resulting in engine damage.

Do not reuse the OCV gasket, always replace with new one.

NOTE

Position the OCV gasket tab "A" as shown.

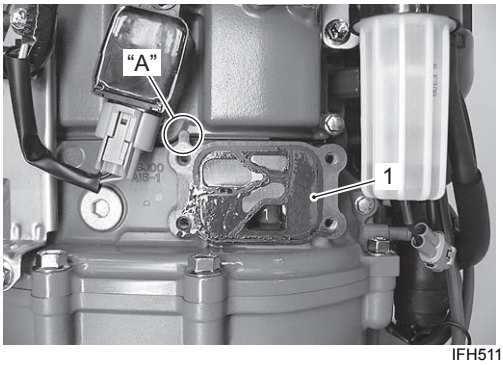

IFH511140109-01

- Install OCV (2) and bracket (3), then tighten four bolts, pre-coated with thread lock, to specified torque.

Tightening torque
OCV bolt (a): 12 N·m (1.2 kgf-m, 8.5 lbf-ft)

1342 : Thread lock cement 99000–32050 (SUZUKI Thread Lock 1342 (50 g))

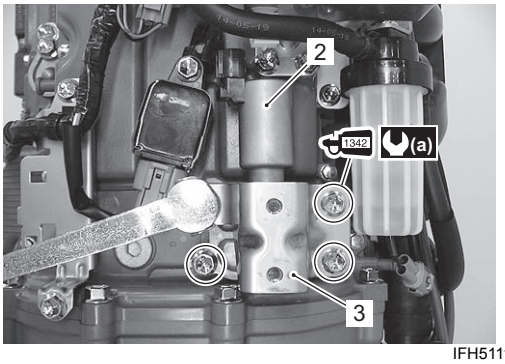

IFH511140110-02

- Check to ensure that all removed parts are back in original position.

OCV (Oil Control Valve) Inspection

CENFH5111406012

Refer to "OCV (Oil Control Valve) Inspection" in Section 1C (Page 1C-18).

Power Unit Removal and Installation

CENFH5111406013

Removal
Before removing power unit;

- Relieve fuel pressure.
  Refer to "Fuel Pressure Relief Procedure" in Section 1G (Page 1G-16).
- Drain engine oil.
- Disconnect battery cables from battery.

1) Remove the lower side covers and oil pan covers.
   Refer to "Lower Side Cover Removal and Installation" in Section 2A (Page 2A-3).
2) Remove the ring gear cover and intake silencer case (1).
   Refer to "Ring Gear Cover Removal and Installation" (Page 1D-2) and "Air Intake Silencer Case Removal and Installation" (Page 1D-2).
3) Loosen three bolts and remove fuel hose guard (2).

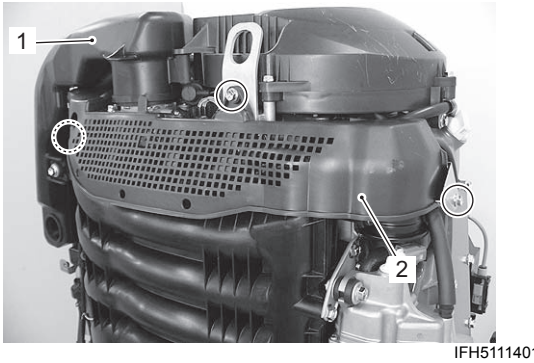

IFH511140111-02

4) Remove the fuel vapor separator (3).
   Refer to "Fuel Vapor Separator Removal and Installation" in Section 1G (Page 1G-18).

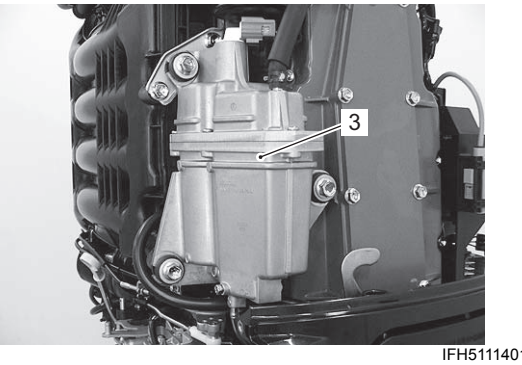

IFH511140112-01

5) Remove the fuel delivery pipe and intake manifold assembly (4).
Refer to “Intake Manifold Removal and Installation” (Page 1D-8).

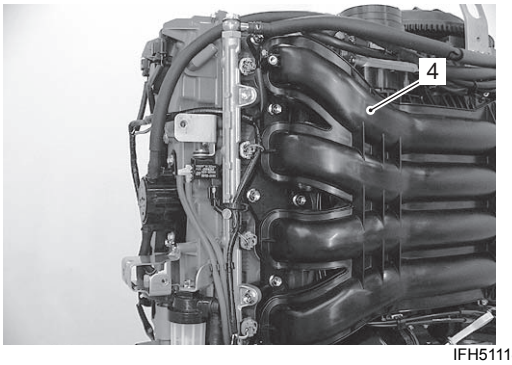

IFH511140113-01

6) Remove all ignition coils and spark plugs.
Remove the bolts and low pressure fuel pump (5).
Refer to “Low Pressure Fuel Pump Removal and Installation” in Section 1G (Page 1G-28).
Remove the cylinder head cover (6).
Refer to “Cylinder Head Cover Removal and Installation” (Page 1D-17).

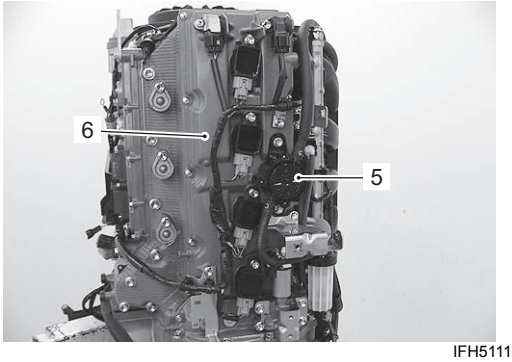

IFH511140114-01

7) Remove the ECM and electric parts holder (7).
Refer to “Electric Parts Holder Removal and Installation” (Page 1D-3).

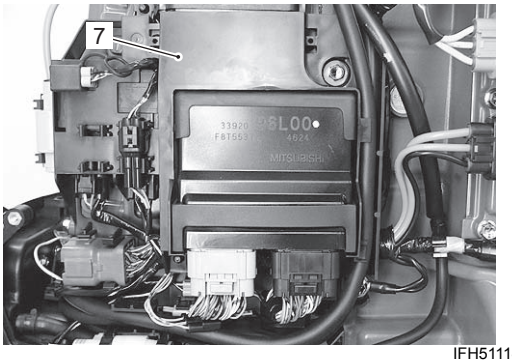

IFH511140115-01

8) Remove starter motor (8).
Refer to “Starter Motor Removal and Installation” in Section 1I (Page 1I-4).

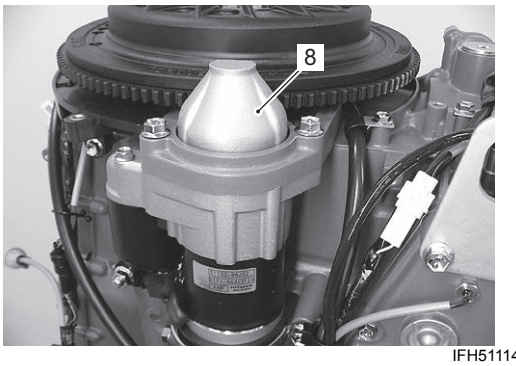

IFH511140116-01

9) Remove flywheel (9).
Refer to “Flywheel Removal and Installation” in Section 1K (Page 1K-5).

Special tool
TOOL (A): 09916–99312 (Flywheel holder)

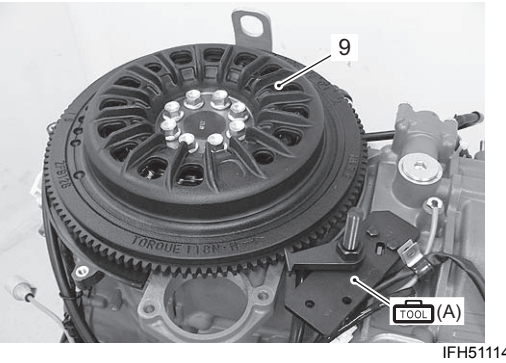

IFH511140117-01

10) Remove battery charge coil (10).
Refer to “Battery Charge Coil Removal and Installation” in Section 1K (Page 1K-7).

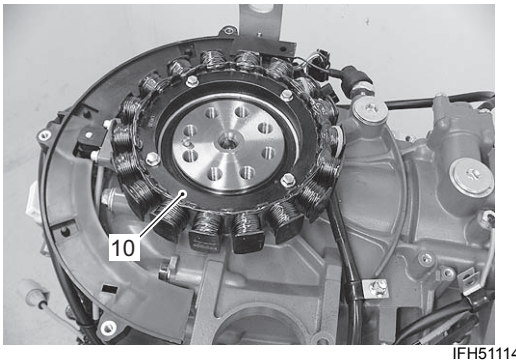

IFH511140118-01

11) Remove rectifier/regulator (11).
Refer to “Rectifier / Regulator Removal and Installation” in Section 1K (Page 1K-8).
Remove the bolt securing lead wire clamp plate (12).

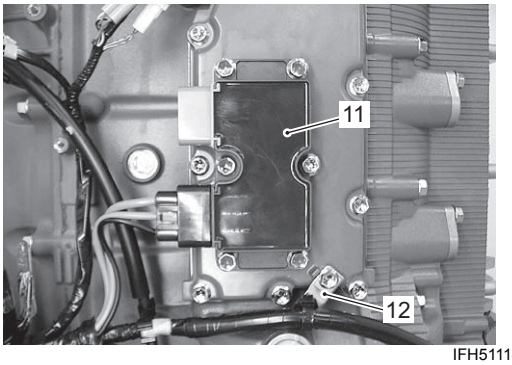

IFH511140119-01

12) Disconnect EX. manifold temperature sensor lead wire connector.
Remove EX. manifold temperature sensor (13).

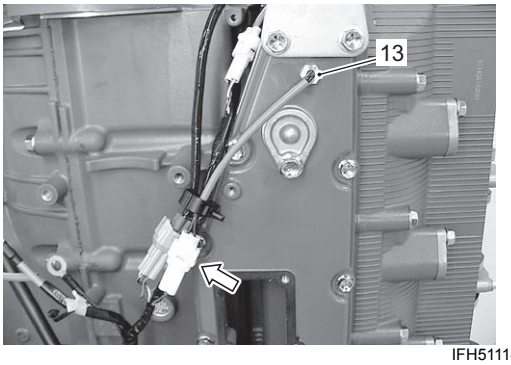

IFH511140120-01

13) Disconnect cylinder temperature sensor lead wire connector.
Remove cylinder temperature sensor (14).

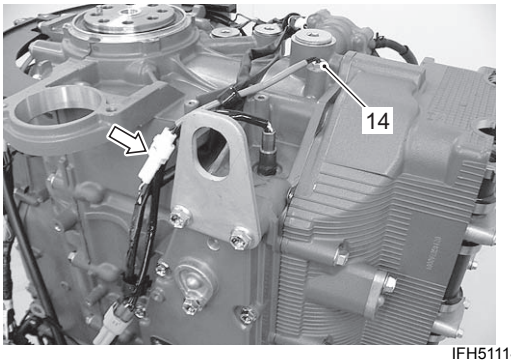

IFH511140121-01

14) Disconnect O2 sensor lead wire connector.
Remove the O2 sensor (15).

Special tool
TOOL (B): 09933–39810 (O2 sensor socket)

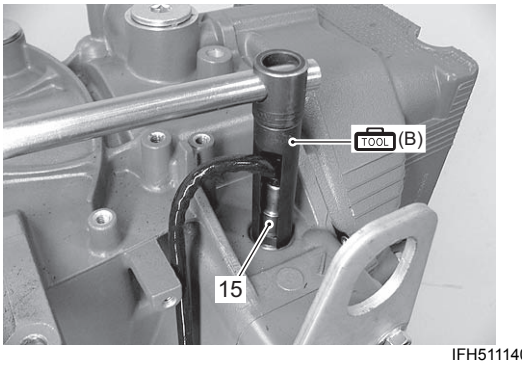

IFH511140122-01

15) Remove screws and CKP sensor (16).

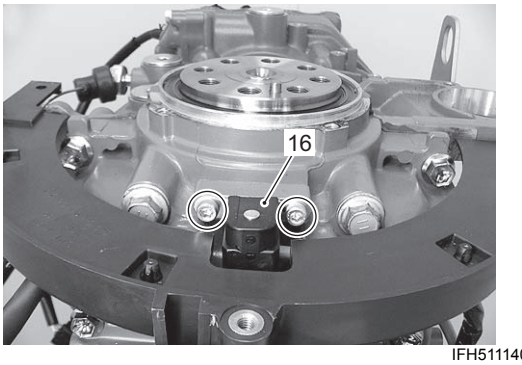

IFH511140123-01

16) Loosen screw and disconnect blue lead wire (17) from oil pressure switch.

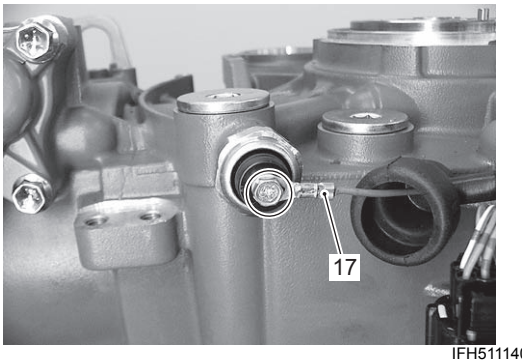

IFH511140124-01

17) Remove the two bolts securing ring gear under cover (18), then remove the ring gear under cover with wiring harness.

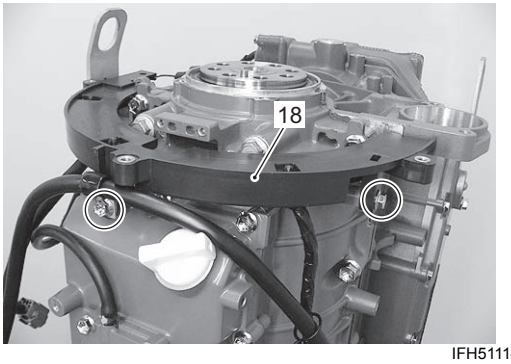

IFH511140125-01

18) Disconnect water hose (19) from balancer water jacket cover.

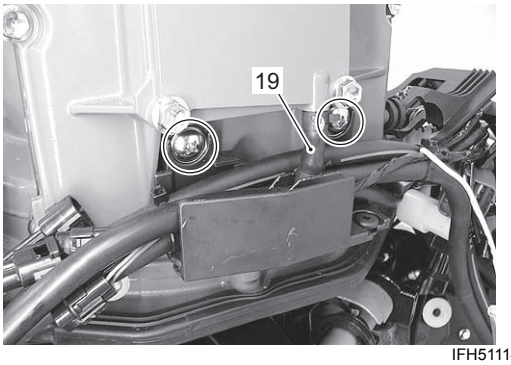

IFH511140126-01

19) Disconnect knock sensor lead wire connector (20). Remove the bolts and sensor protector (21). Remove the knock sensor (22).

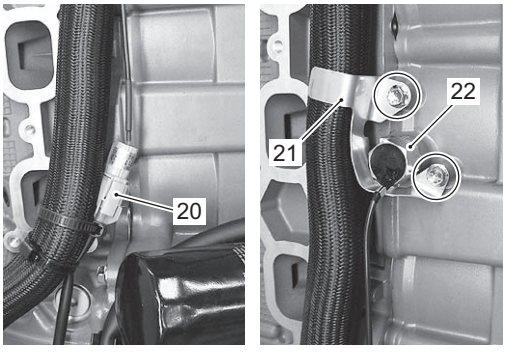

IFH511140127-02

20) Disconnect the water hose (23) from balancer water jacket cover.

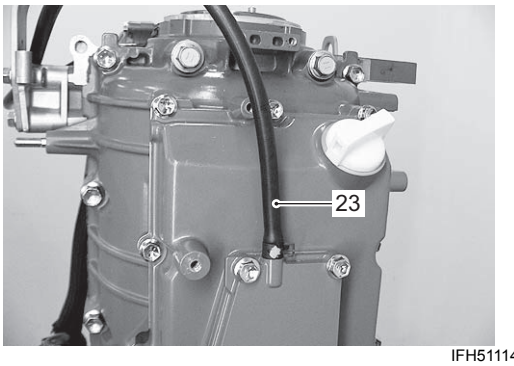

IFH511140128-01

21) Remove three bolts, thermostat cover (24) and thermostat (25).

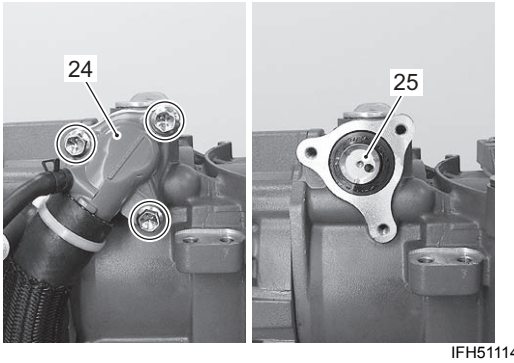

IFH511140129-01

22) Disconnect water hose (26) from cylinder block. Disconnect water hose (27) from cylinder block. Remove oil level dipstick. Remove bolt and engine oil dipstick tube (28).

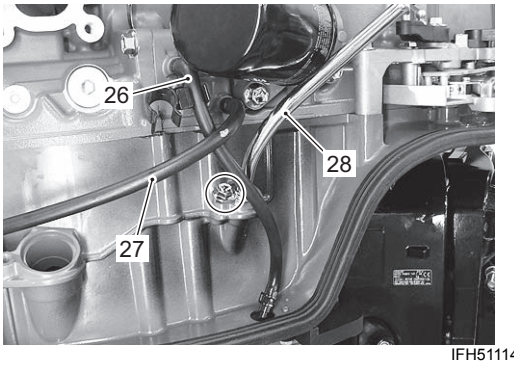

IFH511140130-01

23) Disconnect water flush hose (29) from cylinder block.

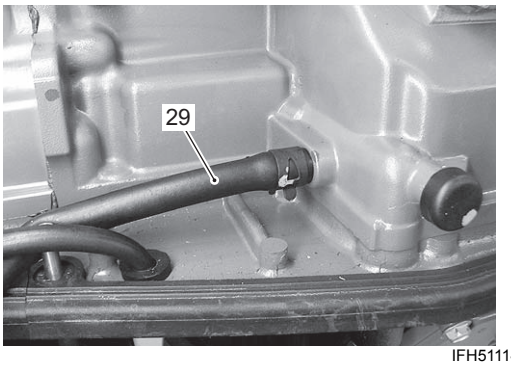

IFH511140131-01

24) Remove five power unit mounting bolts (30) from engine upper side.

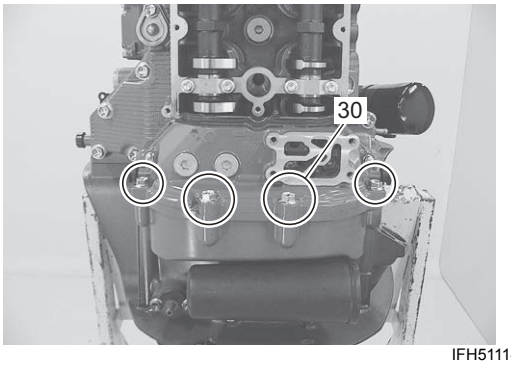

IFH511140014-02

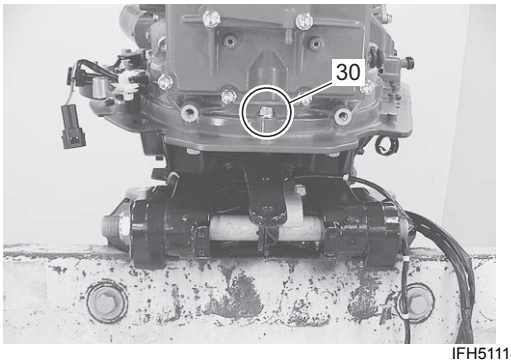

IFH511140015-02

25) Remove sixteen power unit mounting bolts (31) from engine under side.

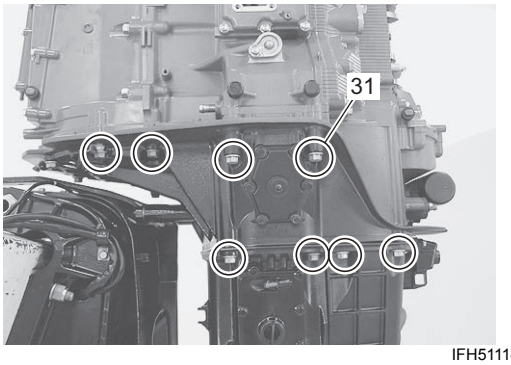

IFH511140016-02

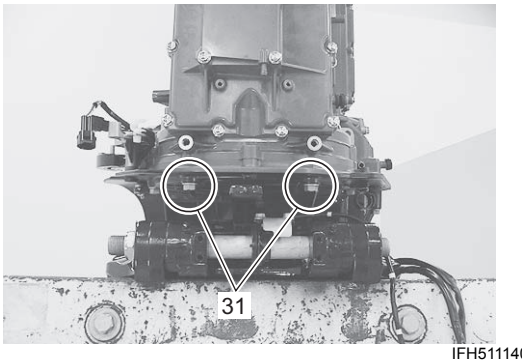

IFH511140017-02

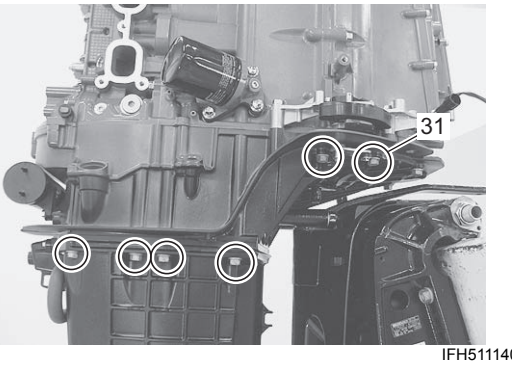

IFH511140018-03

26) Lift up and remove power unit from engine holder.

Installation

Installation is reverse order of removal with special attention to the following step.

NOTICE

Previously used gasket may leak oil and/or cooling water, resulting in engine damage.

Do not reuse gasket once removed. Always use a new one.

Power unit

- Install dowel pins (1) and gasket (2).
  Apply water resistant grease to driveshaft splines.

: Grease 99000–25350 (SUZUKI Water Resistant Grease EP2 (250 g))

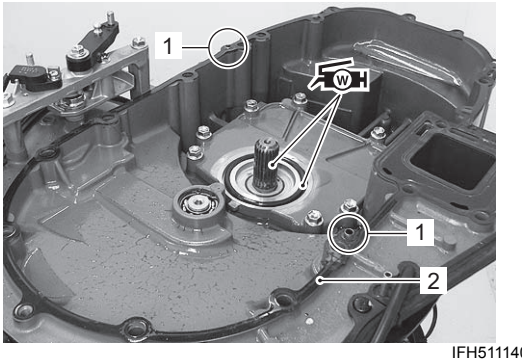

IFH511140132-02

- Install O-ring (3) to mount seal cover, then apply water resistant grease on O-ring.
- Install engine holder seal (4).

NOTE

Install seal (4) with lip facing upward.

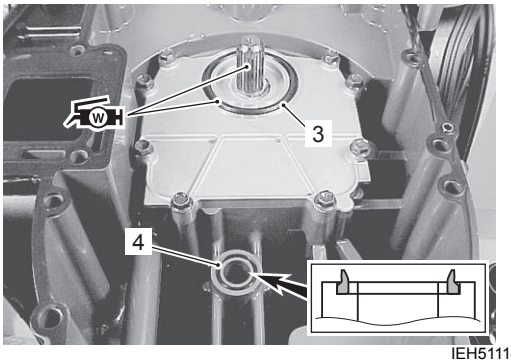

IEH511140097-06

NOTE

Before installing power unit, apply sealant to the six hatched areas shown in the illustration.

1207B : Sealant 99000–31140 (SUZUKI Bond 1207B (100 g))

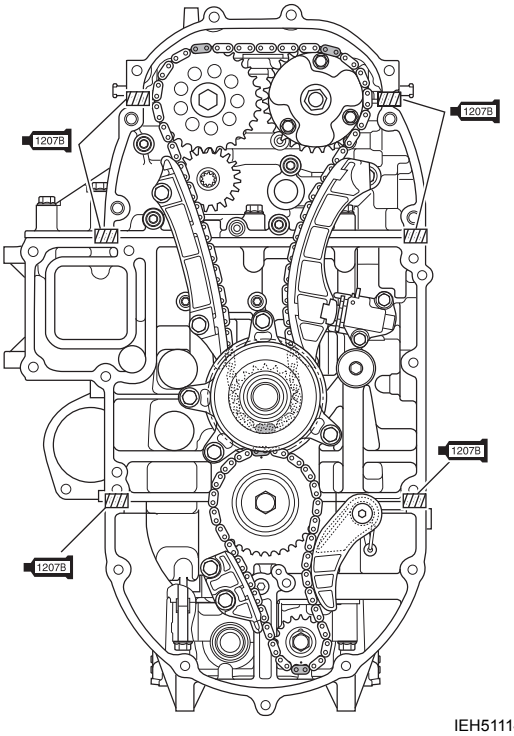

IEH511140098-04

- Lower the power unit onto engine holder.

NOTE

Rotate crankshaft to aid alignment of driveshaft and counter shaft splines.

- Apply silicone seal to power unit mounting bolts and tighten bolts to specified torque.

Si : Sealant 93691–80030 (SUZUKI Silicone Seal (100 g))

Tightening torque
Power unit mounting bolt (10 mm) (a): 50 N·m (5.0 kgf-m, 36.0 lbf-ft)
Power unit mounting bolt (8 mm) (b): 23 N·m (2.3 kgf-m, 16.5 lbf-ft)

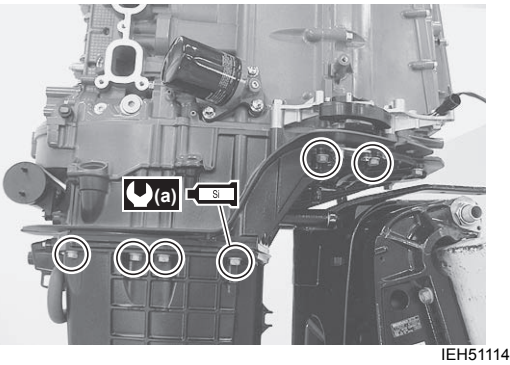

IEH511140099-06

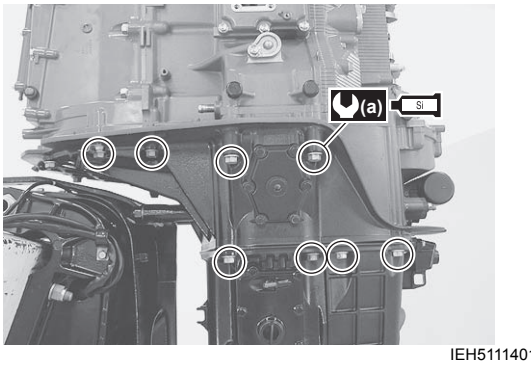

IEH511140100-06

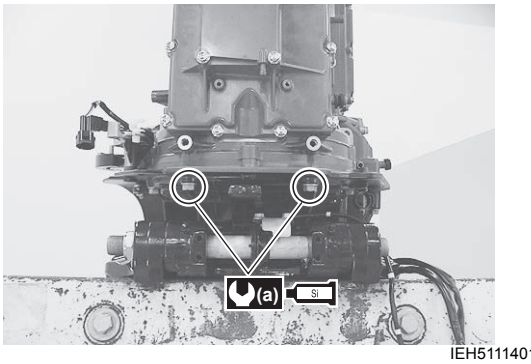

IEH511140101-06

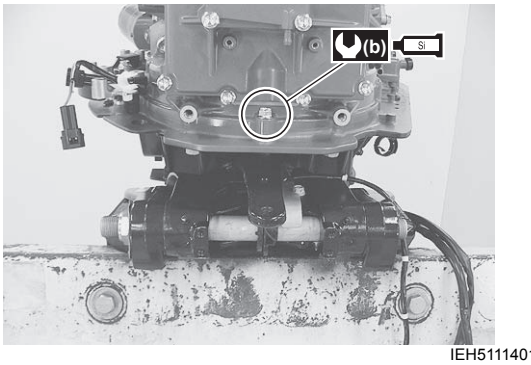

IEH511140102-07

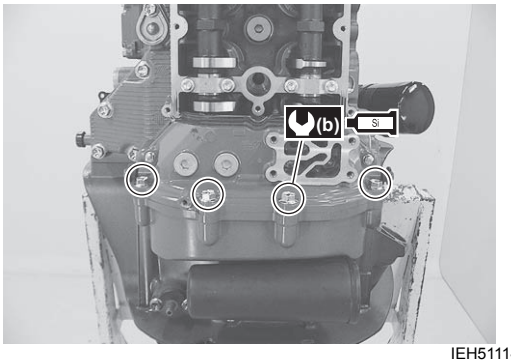

IEH511140103-05

Thermostat

- Assemble thermostat (1) and thermostat cover (2) to cylinder block and secure with bolts.

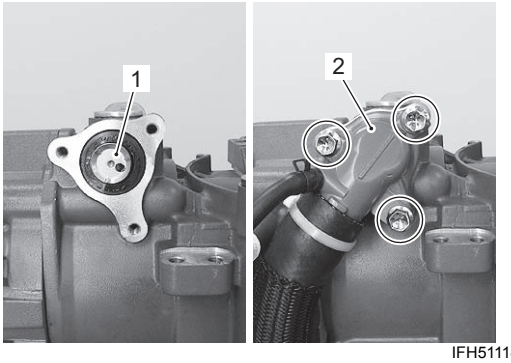

IFH511140133-01

CKP sensor

- Install ring gear under cover (1), then tighten bolts securely.
- Install CKP sensor (2).
  Refer to “CKP Sensor Removal and Installation” in Section 1C (Page 1C-10).

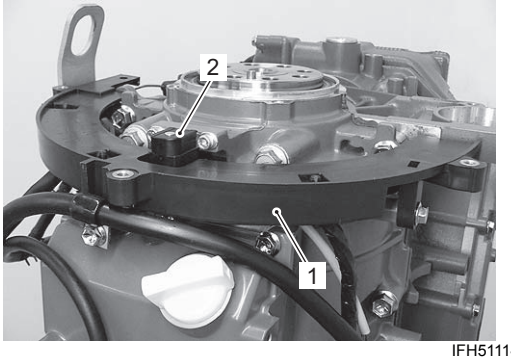

IFH511140134-01

Flywheel

- Install battery charge coil (1).
  Refer to “Battery Charge Coil Removal and Installation” in Section 1K (Page 1K-7).

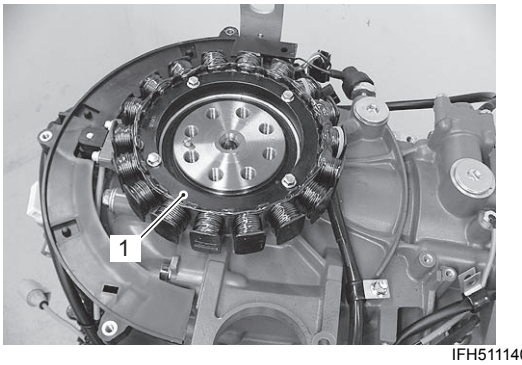

IFH511140135-03

- Install flywheel (2).
  Refer to “Flywheel Removal and Installation” in Section 1K (Page 1K-5).

  Special tool
  TOOL (A): 09916–99312 (Flywheel holder)

  Tightening torque
  Flywheel bolt: 118 N·m (11.8 kgf-m, 85.5 lbf-ft)

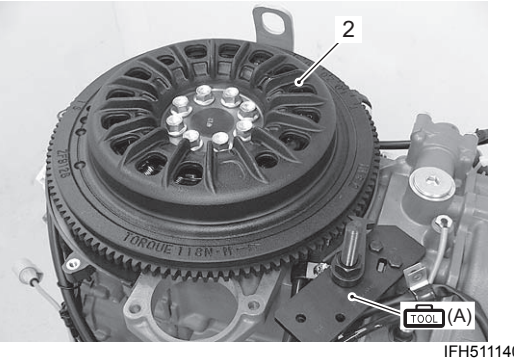

IFH511140137-03

Cylinder head cover

Install cylinder head cover (1).
Refer to “Cylinder Head Cover Removal and Installation” (Page 1D-17).

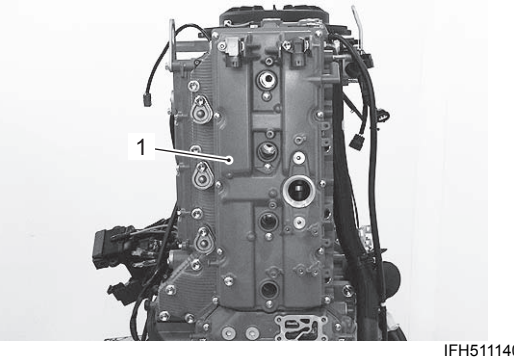

IFH511140136-01

Intake manifold
Install gaskets and intake manifold assembly (1).
Refer to “Intake Manifold Removal and Installation” (Page 1D-8).

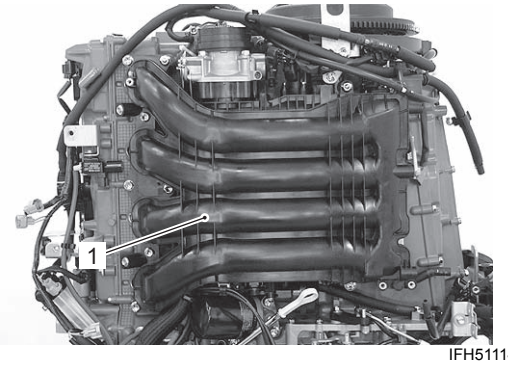

IFH511140138-01

Fuel delivery pipe
Install fuel injectors and fuel delivery pipe (1).
Refer to “Fuel Injector Removal and Installation” in Section 1G (Page 1G-26).

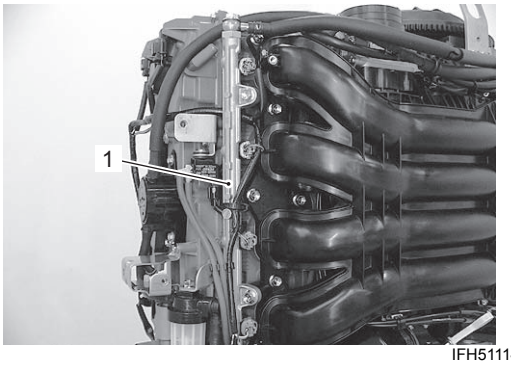

IFH511140139-01

Fuel vapor separator

- Install fuel vapor separator (1).
  Refer to “Fuel Vapor Separator Removal and Installation” in Section 1G (Page 1G-18).

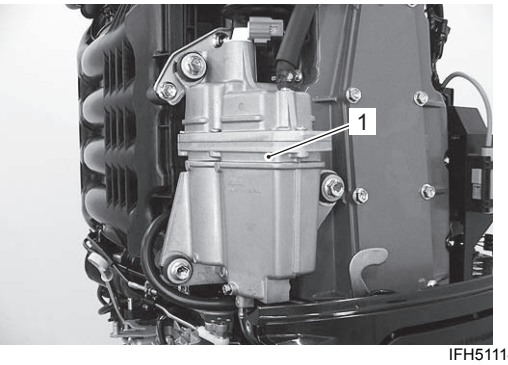

IFH511140140-02

Final assembly check

- Perform the following checks to ensure proper and safe operation of the repaired unit.
  - All parts removed have been returned to their original positions.
  - Fuel and water hose routing match’s service manual illustration.
    Refer to “Fuel Hose Routing” in Section 4B (Page 4B-1) and “Water Hose Routing” in Section 4B (Page 4B-6).
  - Wire routing match’s service manual illustration.
    Refer to “Wiring Harness Routing Diagram” in Section 4A (Page 4A-2).
  - No fuel leakage is evident when fuel system is pressurized.
  - No water leakage is evident during final test running.

Timing Chain, Camshaft Sprocket, Balancer Chain Components

CENFH5111406017

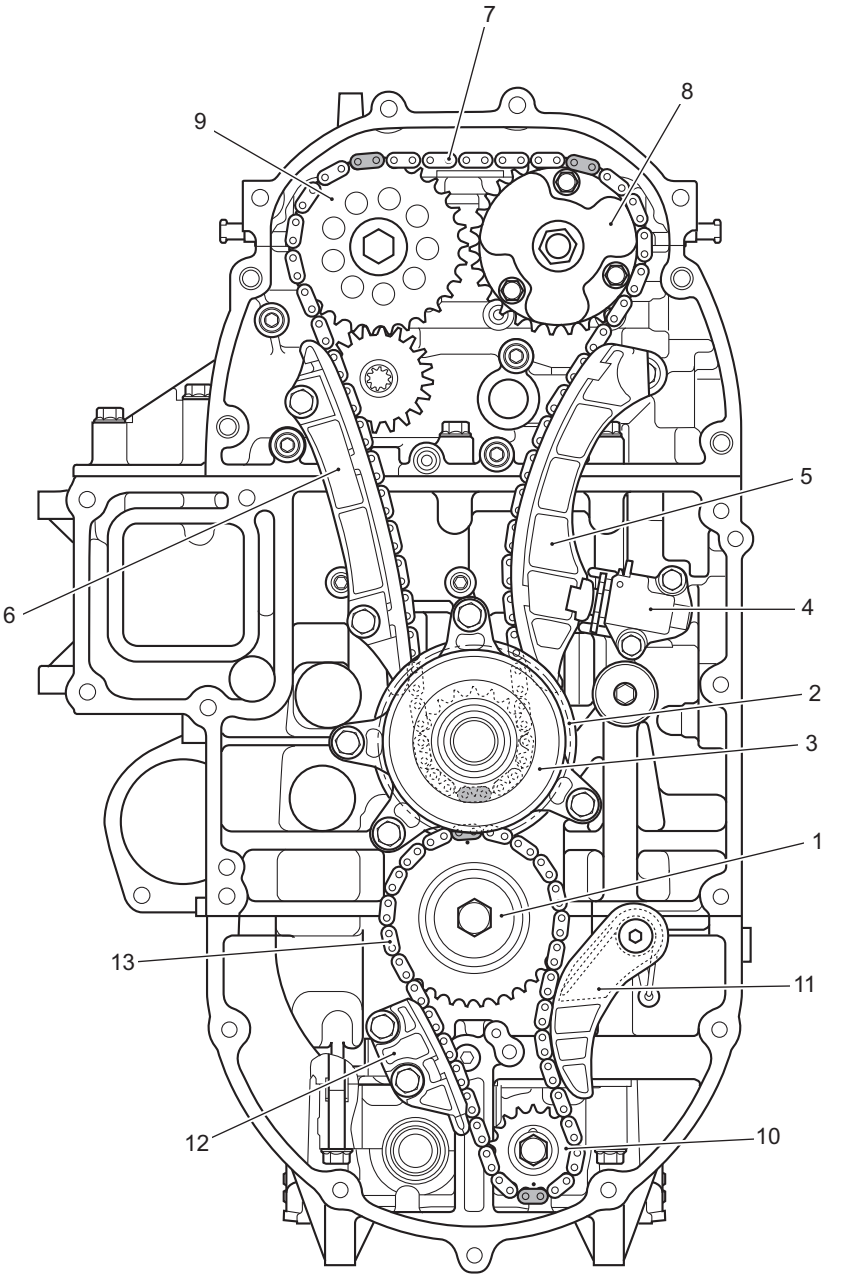

IEH511140178-04

1. Crankshaft/Drive gear/Balancer drive gear	6. Timing chain guide	11. Balancer chain tensioner
2. Driven gear/Timing sprocket	7. Timing chain	12. Balancer chain guide
3. Driven gear holder	8. IN. camshaft timing sprocket	13. Balancer chain
4. Chain tensioner adjuster	9. EX. camshaft timing sprocket	
5. Timing chain tensioner	10. Balancer driven sprocket	

Timing Chain, Camshaft Sprocket, Balancer Chain Removal and Installation

CENFH5111406018

Removal

1) Remove the power unit.
   Refer to “Power Unit Removal and Installation” (Page 1D-20).
2) Remove the oil pump.
   Refer to “Oil Pump Removal and Installation” in Section 1E (Page 1E-4).
3) Loosen the bolts securing IN./EX. camshaft timing sprockets to each camshaft.

NOTE

- **Sprocket bolt is LH thread.**
- **Hold camshaft by placing a wrench on the hexagon area of the camshaft.**

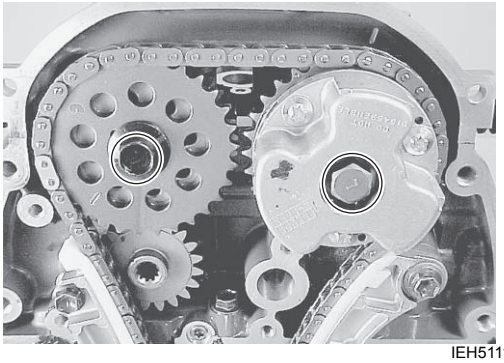

IEH511140179-04

4) Remove the four bolts (1) securing driven gear holder (2), then remove the driven gear holder.

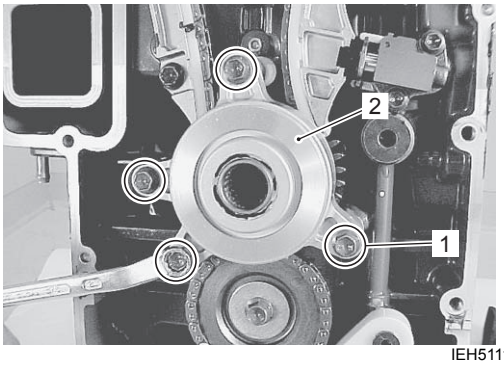

IEH511140180-04

5) Remove bolts (3) and balancer chain guide (4).

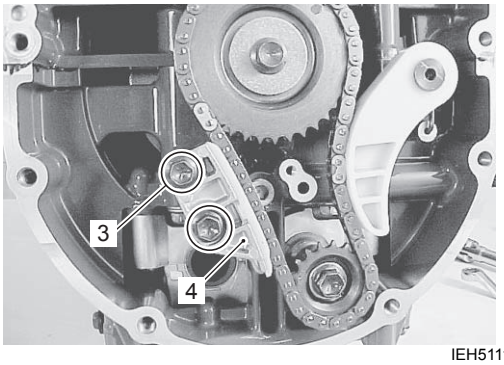

IEH511140181-04

6) Remove bolt (5), balancer chain tensioner (6), washer “a” and spring (7).

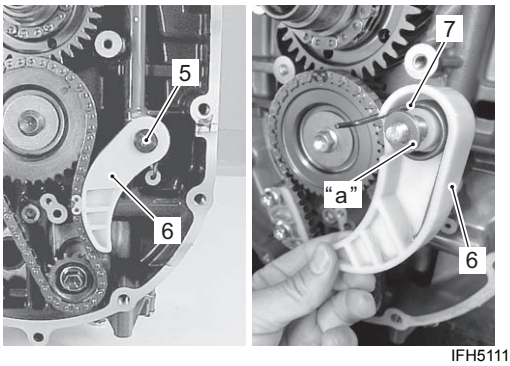

IFH511140019-02

7) Loosen and remove the bolt (8) securing balancer drive sprocket (9) to crankshaft.

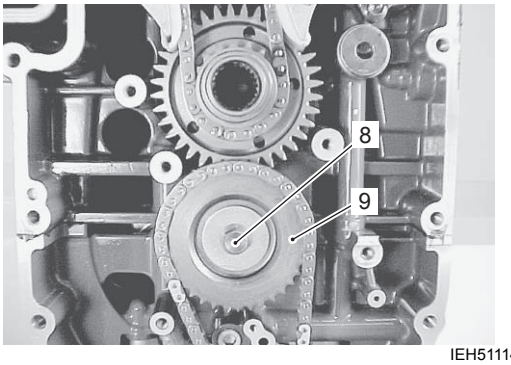

IEH511140183-04

NOTE

To hold the crankshaft, use special tool and flywheel as shown in figure.

Special tool
TOOL (A): 09916–99312 (Flywheel holder)

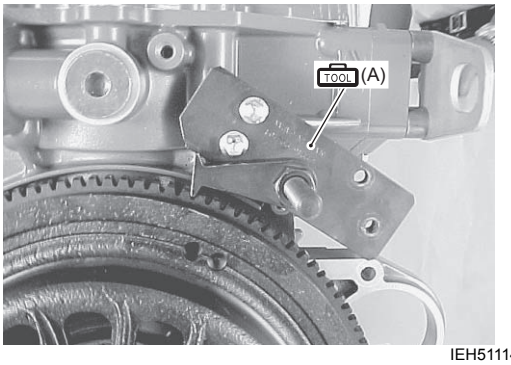

IEH511140184-04

8) Remove the balancer drive sprocket (9) and balancer chain (10).

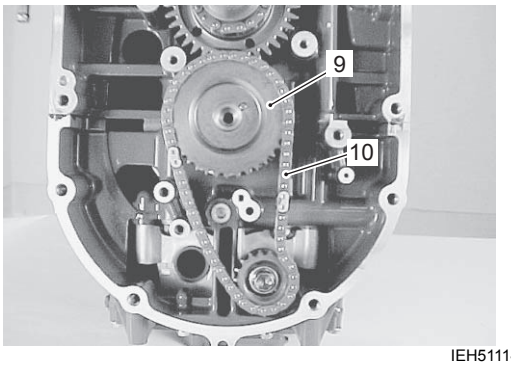

IEH511140185-04

9) Turn the crankshaft in its normal running direction "A" until the match mark (•) "B" on the crankshaft drive gear points to 12 o'clock (toward cylinder head).

NOTICE

After the timing chain has been removed, independently turning camshaft or crankshaft will cause interference between piston and valve, which cause damage to these related parts.

Do not rotate the camshaft and/or crankshaft with timing chain removed.

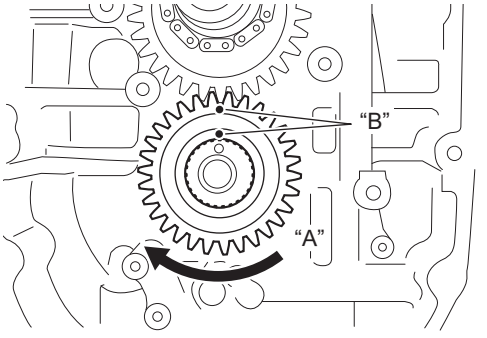

IEH511140186-04

A:	Engine normal running direction
B:	Match mark (•) on crankshaft drive gear

10) Remove bolts (11) and timing chain guide (12).

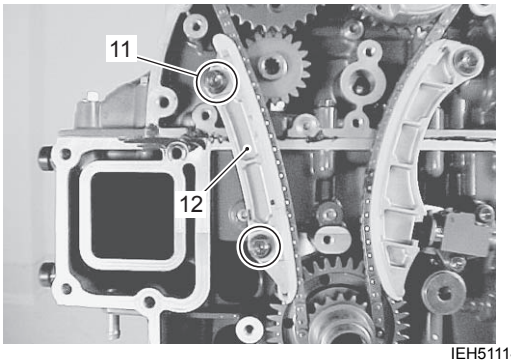

IEH511140187-04

11) Remove bolts (13) and chain tensioner adjuster (14).

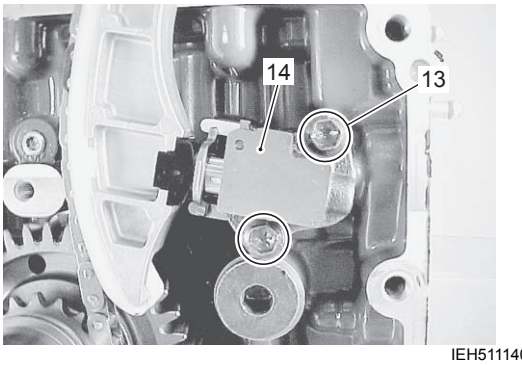

IEH511140188-04

12) Remove bolt (15) and timing chain tensioner (16).

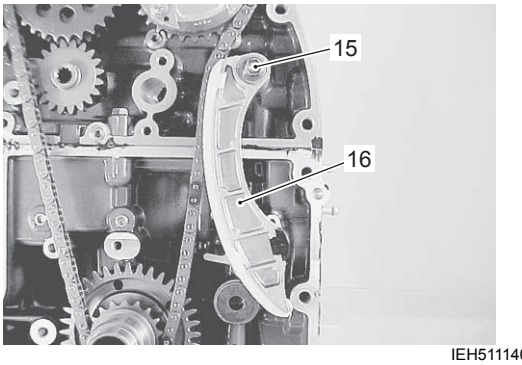

IEH511140189-04

13) Remove bolt (17), EX. camshaft timing sprocket (18) and timing chain (19).
Remove oil pump drive gear (20).

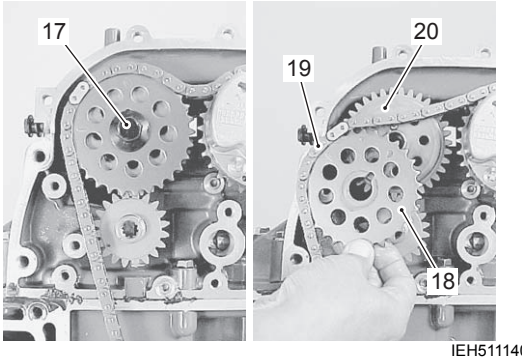

IEH511140190-04

14) Remove bolt (21) and IN. camshaft timing sprocket (22).

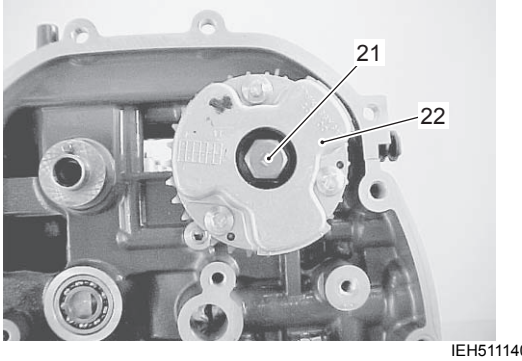

IEH511140191-04

15) Remove driven gear (23).

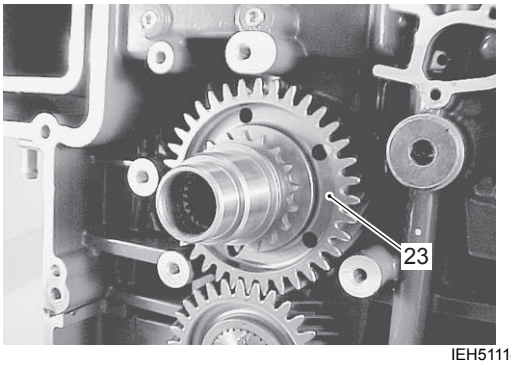

IEH511140192-04

16) Remove drive gear (24).

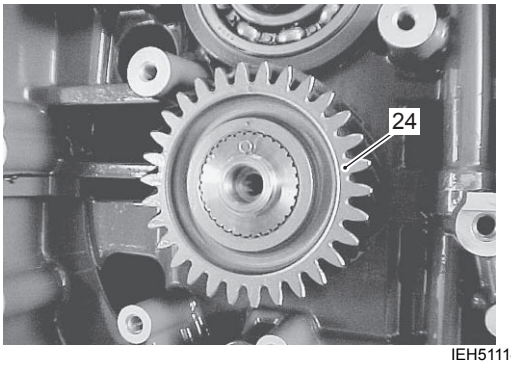

IEH511140193-04

Installation

Installation is reverse of removal with special attention to following steps.

1) Install the drive gear (1) on crankshaft so that dowel pin hole “A” aligns with match mark (•) “B” on the drive gear as shown in illustration.

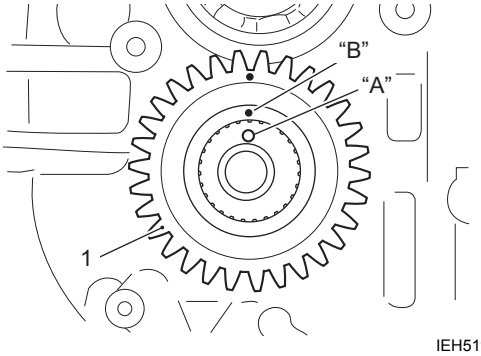

IEH511140194-04

2) Check that match mark (•) “C” on the crankshaft drive gear points to 12 o’clock (towards cylinder head).

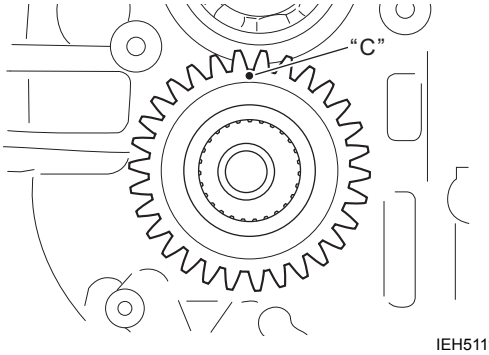

IEH511140195-04

3) Install the driven gear (2) on the cylinder block so that match mark (•) “C” aligns with match mark (•) “D” on the driven gear as shown in illustration.

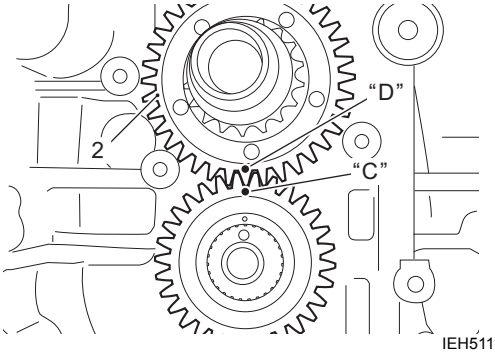

IEH511140196-04

4) Fit the dowel pin (3) onto IN. camshaft. Fit IN. camshaft timing sprocket (4) and temporarily tighten the sprocket bolt.
Check that match marks (•) “E”, “F” are correctly aligned as shown in illustration.

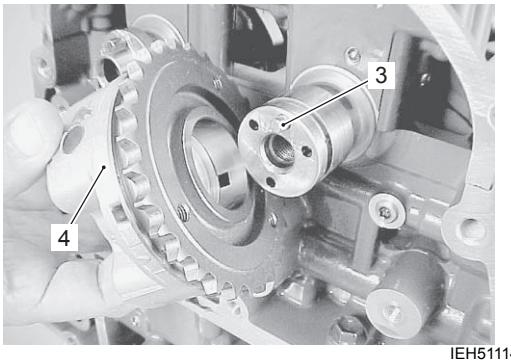

IEH511140197-04

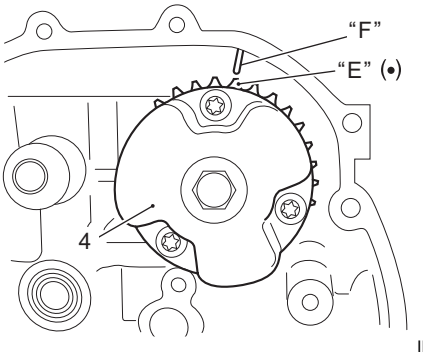

IEH511140198-04

5) Fit the dowel pin (5) onto the EX. camshaft. Install oil pump drive gear (6).

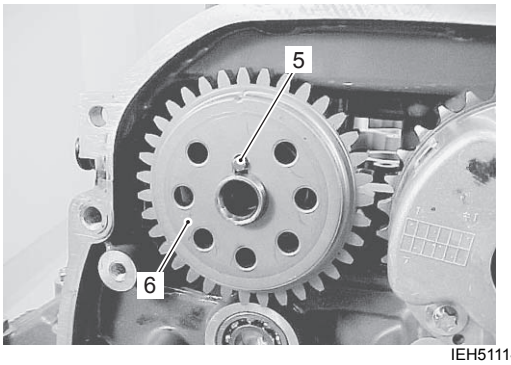

IEH511140199-04

6) Align the blue plate “G” of timing chain (7) with the match mark (•) “D” on the driven gear and fit the chain onto the driven gear.

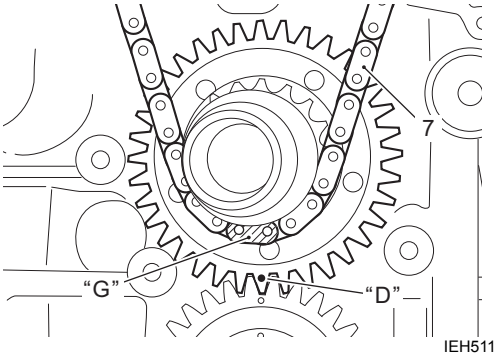

IEH511140200-04

7) As shown in the illustration, fit the timing chain with one blue plate “H” aligned with the match mark (•) (△) “E” onto the IN. camshaft timing sprocket.

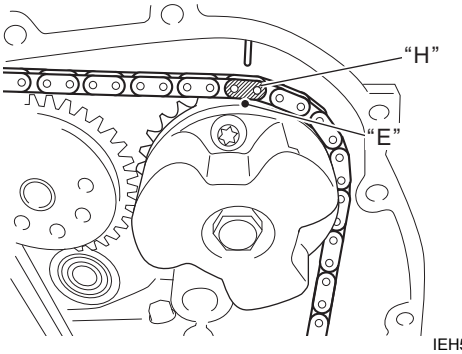

IEH511140201-04

8) While aligning another blue plate “I” of timing chain with the match mark (•) “J” on the EX. camshaft timing sprocket (8), fit the chain onto the sprocket.

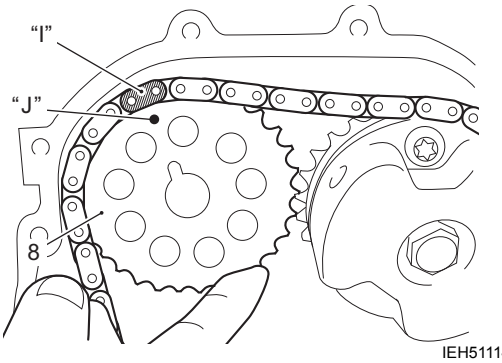

IEH511140202-04

9) Install the EX. camshaft timing sprocket (8) on the EX. camshaft, then temporarily tighten the sprocket bolt.

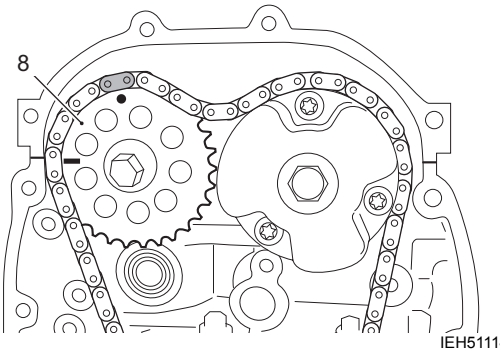

IEH511140203-04

10) Insert the spacer (9) into the chain tensioner (10). Install chain tensioner, then tighten bolt (11) securely.
Apply engine oil to chain tensioner.

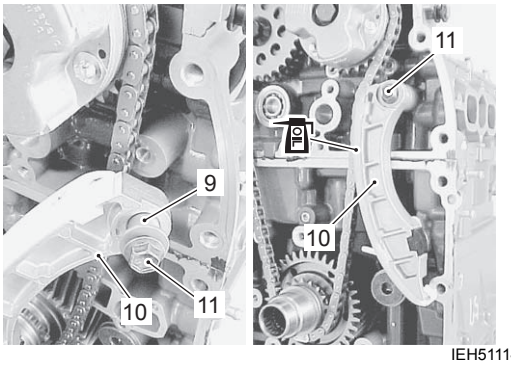

IEH511140204-04

11) With latch of tensioner adjuster pushed in and plunger pushed back into body, insert stopper into latch and body.
After inserting stopper, check to make sure that plunger will not come out.

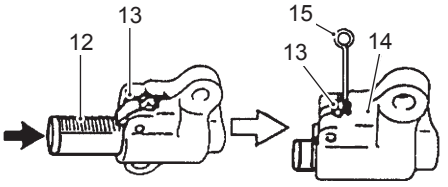

IDG211140087-01

12. Plunger	14. Body
13. Latch	15. Stopper

12) Install timing chain tensioner adjuster, then tighten bolts (16) to specified torque.

Tightening torque
Tensioner adjuster bolt (a): 11 N·m (1.1 kgf-m, 8.0 lbf-ft)

Apply engine oil to timing chain.

13) Remove the stopper (15) from tensioner adjuster.

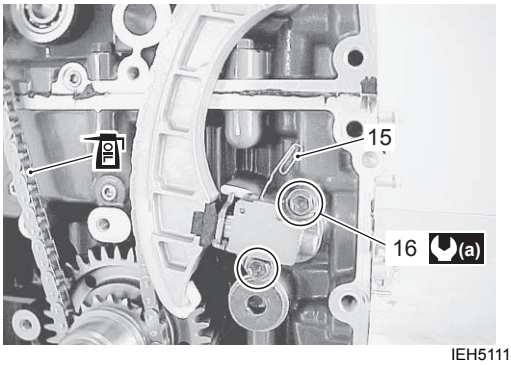

IEH511140206-04

14) Install timing chain guide (17), then tighten bolts securely.
Apply engine oil to chain guide.

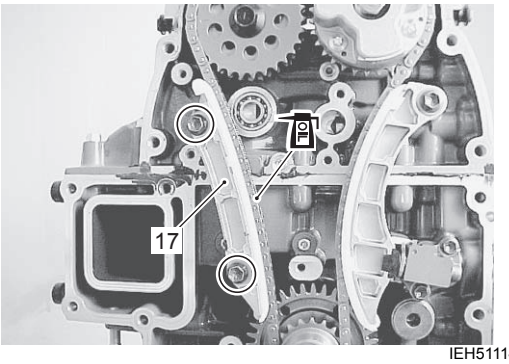

IEH511140207-03

15) Turn the crankshaft two complete rotations in direction shown in illustration.
As shown in the illustration, check that all match marks are in alignment as stated below when the match mark (•) "C" on the drive gear is pointing to 12 o'clock.

- The match mark (•) (△) "E" on the IN. sprocket aligns with the match mark "F" on the camshaft housing.
- The match mark (engraved line) "K" on the EX. sprocket aligns with the mating face "L" between cylinder head and lower camshaft housing.

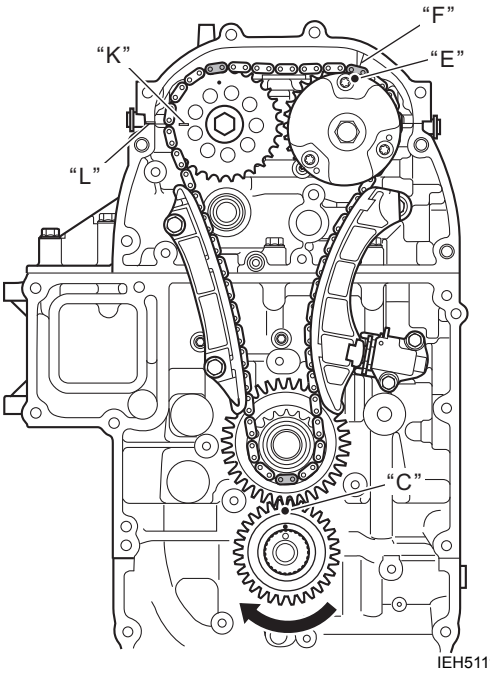

IEH511140208-03

16) Check that match mark (•) "C" on the crankshaft drive gear points to 12 o'clock (towards cylinder head).

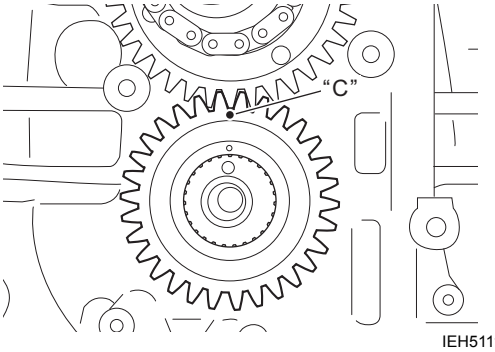

IEH511140209-03

17) Check that match mark (•) “M” on the balancer driven sprocket points to 6 o’clock as shown in the illustration.

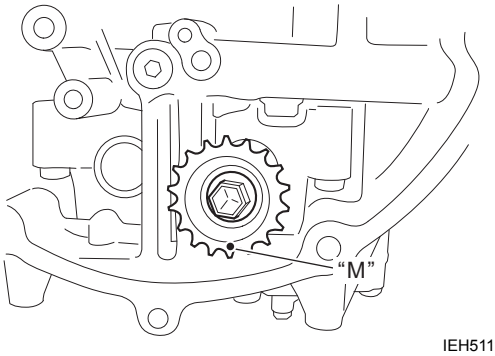

IEH511140210-03

18) Fit the dowel pin (18) on the crankshaft.

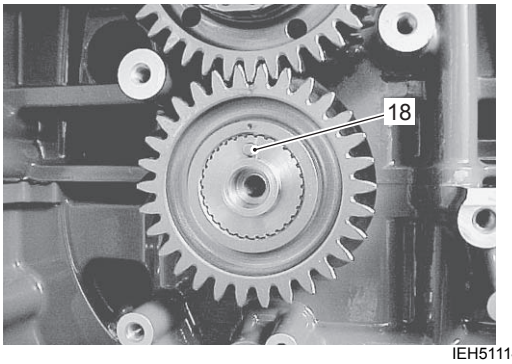

IEH511140211-03

19) Align the blue plate “N” of balancer chain (19) with the match mark (•) “M” on the balancer driven sprocket and fit the chain on the sprocket.

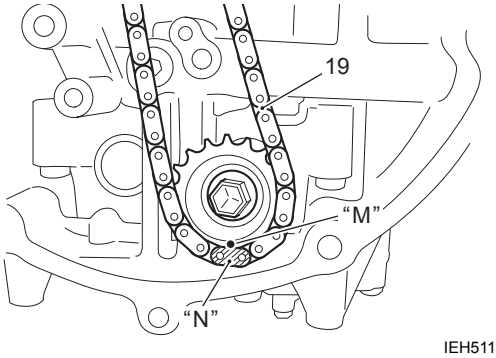

IEH511140212-04

20) Align another blue plate “O” of balancer chain with the match mark (•) “P” on the balancer drive sprocket (20) and fit the chain on the sprocket.

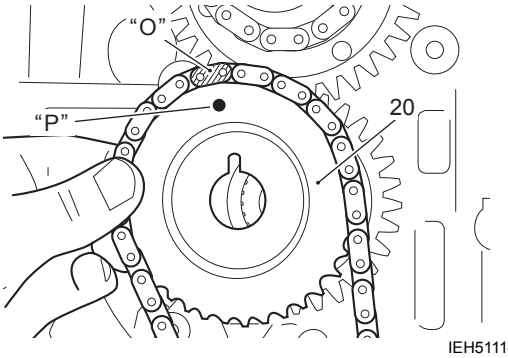

IEH511140213-04

21) Install the balancer drive sprocket (20) on the crankshaft, then temporarily tighten the sprocket bolt and washer.
Check that match marks “M” and “P” are correctly aligned as shown in illustration.

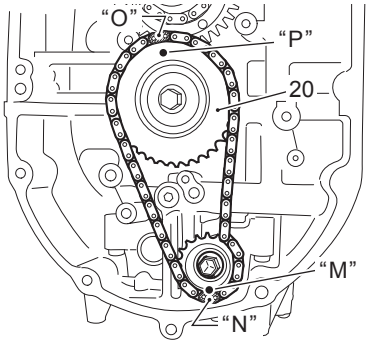

IEH511140214-04

22) Install balancer chain guide (21), then tighten bolts (22) securely.

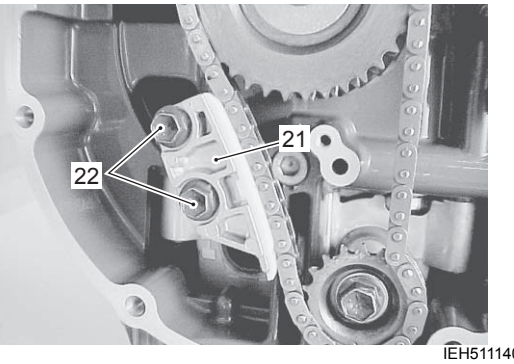

IEH511140215-03

23) Assemble tensioner spring (23), washer “a” and balancer chain tensioner (24).

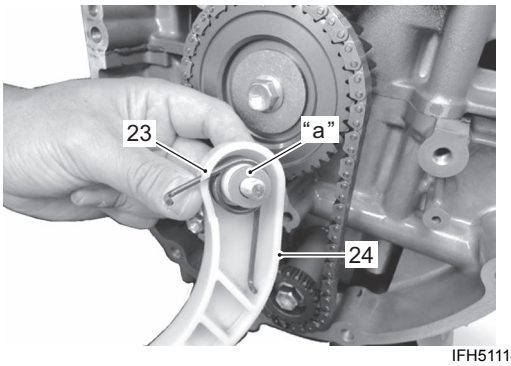

IFH511140020-02

24) Install chain tensioner (24), then tighten bolt (25) securely.

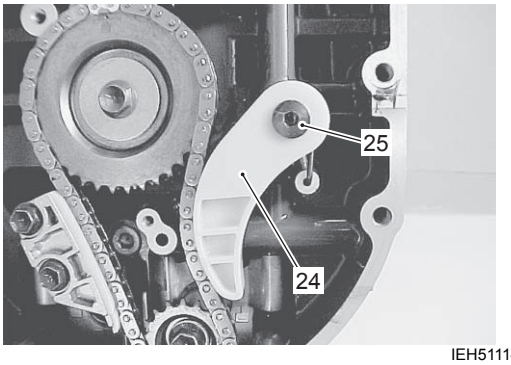

IEH511140353-03

25) Tighten crankshaft drive gear bolt (26) to specified torque.

Tightening torque
Crankshaft drive gear bolt (b): 48 N·m (4.8 kgf-m, 34.5 lbf-ft)

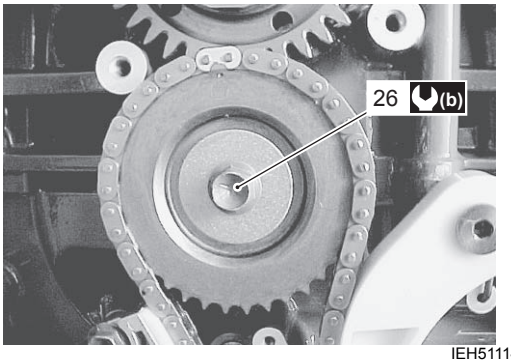

IEH511140217-04

NOTE

To hold the crankshaft, use special tool and flywheel as shown in figure.

Special tool
TOOL (A): 09916–99312 (Flywheel holder)

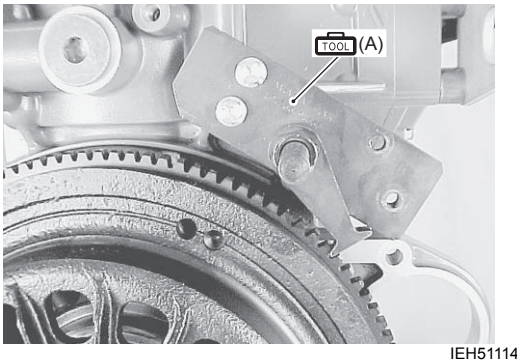

IEH511140218-03

26) Tighten IN. camshaft timing sprocket bolt to specified torque.

Tightening torque
IN. camshaft timing sprocket bolt (c): 60 N·m (6.0 kgf-m, 43.5 lbf-ft)

NOTICE

Over tightening the sprocket bolt can cause damage to VVT actuator.

Do not over tighten the camshaft timing sprocket bolt.

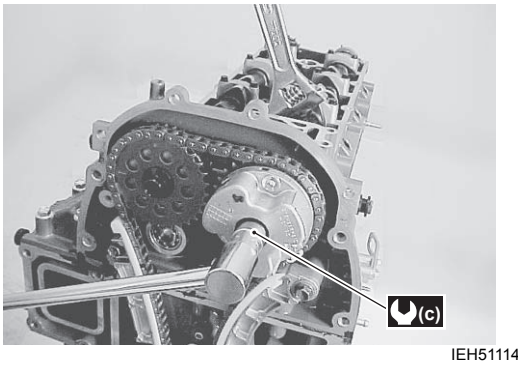

IEH511140219-05

27) Tighten EX. camshaft timing sprocket bolt to specified torque.

Tightening torque
EX. camshaft timing sprocket bolt (d): 78 N·m (7.8 kgf-m, 56.5 lbf-ft)

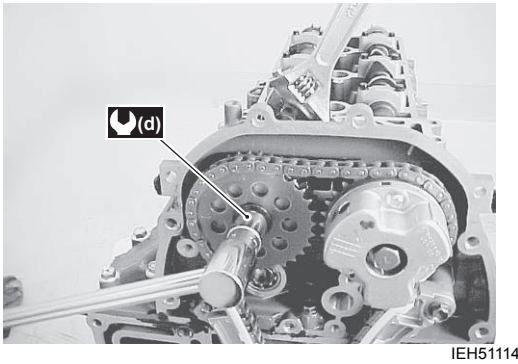

IEH511140220-06

28) Install driven gear holder (27), then tighten four bolts securely.

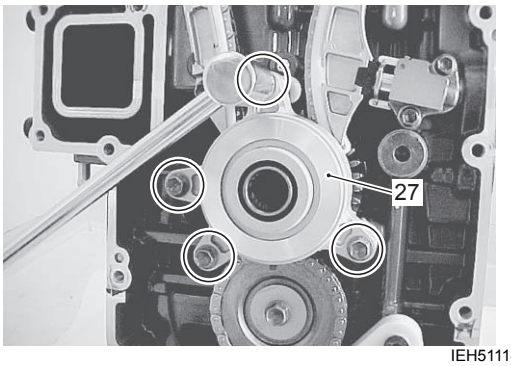

IEH511140221-03

Timing Chain, Camshaft Sprocket, Balancer Chain Related Parts Inspection

CENFH5111406019

NOTE

If any component is worn excessively, cracked, defective or damaged in any way, it must be replaced.

Timing Chain / Balancer Chain

- Inspect timing chain and balancer chain for wear or damage.
  If excessive wear or other damage is found, replace it.



IEH511140377-03

Tensioner Adjuster

Inspect tensioner adjuster for smooth operation.
Replace if faulty.
Check oil delivery passage to tensioner.

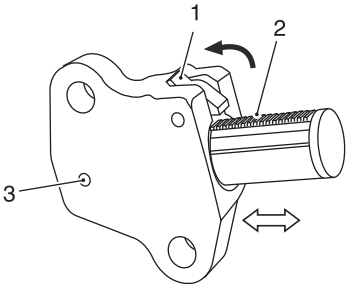

I9J011140182-01

1. Latch	2. Tooth surface	3. Oil passage

Timing Chain Tensioner / Chain Guide

Check chain guide shoe for wear or damage.
If excessive wear or other damage is found, replace it.



IEH511140224-03

Camshaft Timing Sprocket

Check teeth of sprocket for wear or damage.
If excessive wear or other damage is found, replace it.

NOTICE

The VVT actuator will lose its original performance if it is disassembled.

VVT actuator is non-repairable.
Do not try to disassemble and repair the VVT actuator.
If any faulty condition is found, replace the VVT actuator with a new one.



IEH511140225-03

1. VVT actuator

Driven Gear Holder

- Check driven gear holder.
  If cracks or other damage is found, replace holder.
- Check driven gear bearing.
  Replace bearing if pitted, noisy, or rough condition.
- Check oil seal.
  If excessive wear or other damage is found, replace oil seal.



IEH511140226-03

NOTE

Install oil seal lip (spring side) facing as shown in figure.

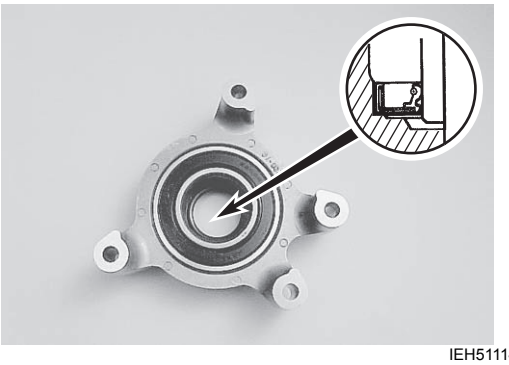

IEH511140227-03

Drive Gear / Driven Gear / Bearing

- Inspect drive gear and driven gear for wear or other damage.
  If excessive wear or other damage is found, replace it.
- Inspect driven gear bearing for pitting, rough or other damage.
  Replace if necessary.

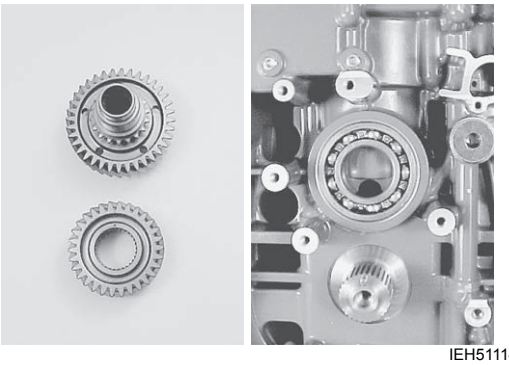

IEH511140228-03

Balancer Sprocket

Check teeth of sprocket for wear or damage.
If excessive wear or other damage is found, replace it.

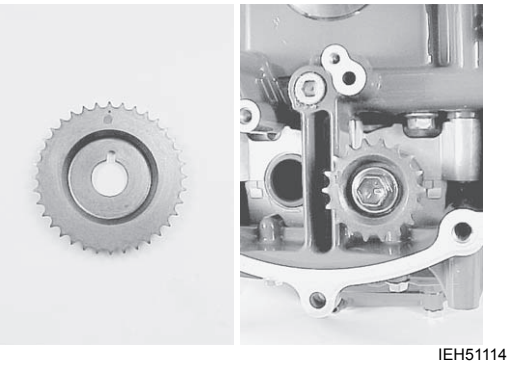

IEH511140229-03

Balancer Chain Tensioner / Chain Guide

- Check tensioner for wear or damage.
  If excessive wear or other damage is found, replace it.
- Check chain guide for wear or damage.
  If excessive wear or other damage is found, replace it.



IEH511140230-03

Oil Pump Drive Gear

Inspect drive gear for wear or other damage.
If excessive wear or other damage is found, replace it.



IEH511140231-03

Camshaft, Tappet and Shim Removal and Installation

CENFH5111406020

Removal

1) Remove the power unit.
   Refer to “Power Unit Removal and Installation” (Page 1D-20).
2) Remove the timing chain.
   Refer to “Timing Chain, Camshaft Sprocket, Balancer Chain Removal and Installation” (Page 1D-29).
3) Remove two plugs (1) and (2).

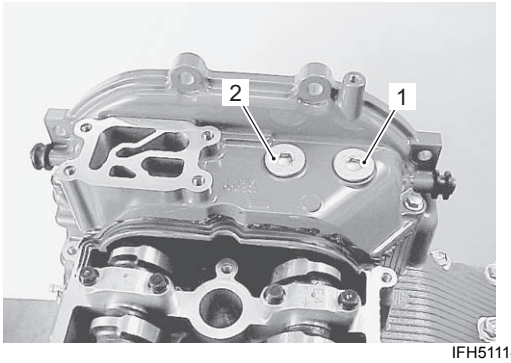

IFH511140021-01

4) Remove the bolts securing the camshaft housing (3) to cylinder head, then remove each camshaft housing.

NOTE

For ease of assembly, note position of each individual camshaft housing.

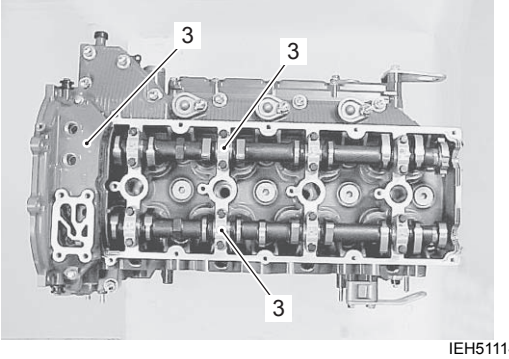

IEH511140355-03

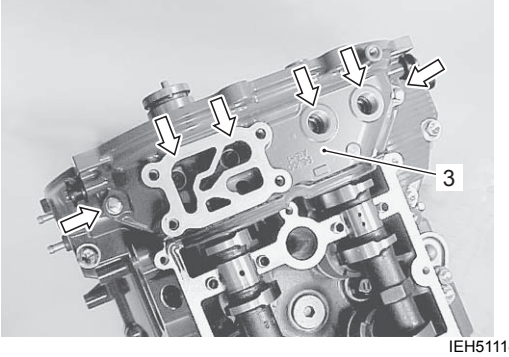

IEH511140356-03

5) Remove intake camshaft and exhaust camshaft.

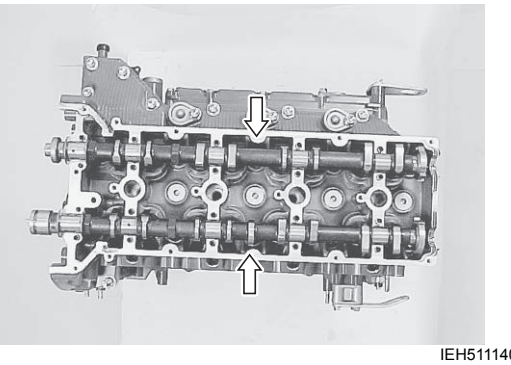

IEH511140357-03

6) Remove tappets and tappet shims.

NOTE

All tappets and tappet shims must be installed in their original positions.
For ease of assembly, lay out tappets and record shim thickness for each individual cylinder/valve position.

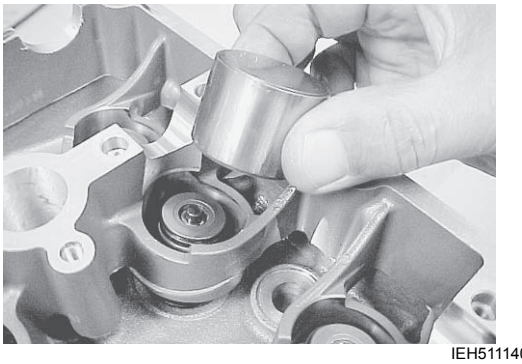

IEH511140234-03

Installation

Installation is reverse order of removal with special attention to the following steps.

1) Apply engine oil around tappets.
2) Install tappets and tappet shims in their original position.

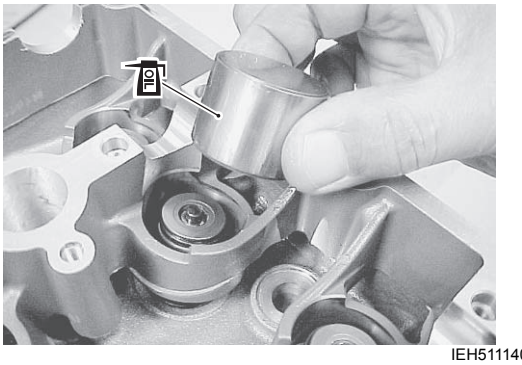

IEH511140235-03

3) Apply engine oil to the surface of each camshaft lobe and journal, then place them onto cylinder head.

NOTE

Before installing camshafts, turn crankshaft until the match mark "A" on the crankshaft drive gear points to 12 o'clock (toward cylinder head).

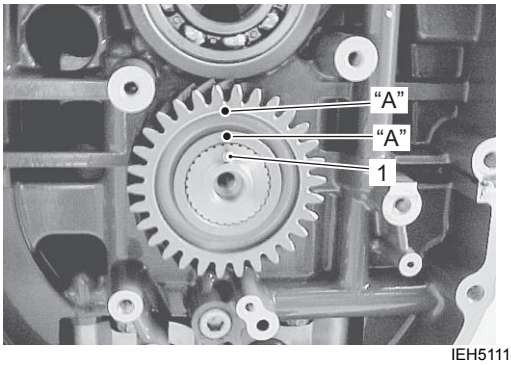

IEH511140236-03

1. Dowel pin	"A": Match mark (•) on drive gear

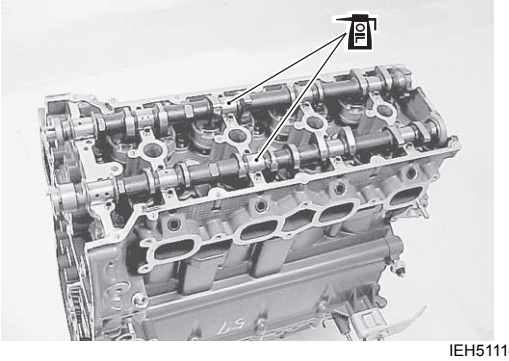

IEH511140237-03

NOTE

When installing the camshafts, align dowel pin "B" on the IN. camshaft with match mark "C" on lower camshaft housing and engraved line "D" on EX. sprocket align with lower camshaft housing mating face.

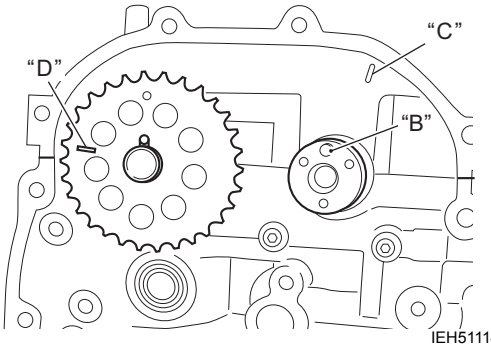

IEH511140238-03

"B": Dowel pin on camshaft
"C": Match mark on lower camshaft housing
"D": Engraved line on EX. sprocket

4) Install camshaft housing pins as shown in figure.

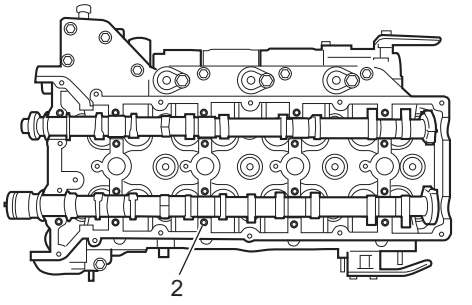

IEH511140239-03

2. Pin

5) Apply sealant to lower camshaft housing sealing surface area as shown in figure.

1207B : Sealant 99000–31140 (SUZUKI Bond 1207B (100 g))

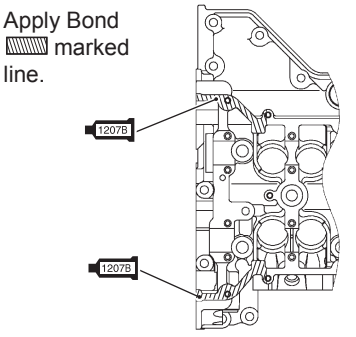

IEH511140240-02

6) Install the lower camshaft housing (3).

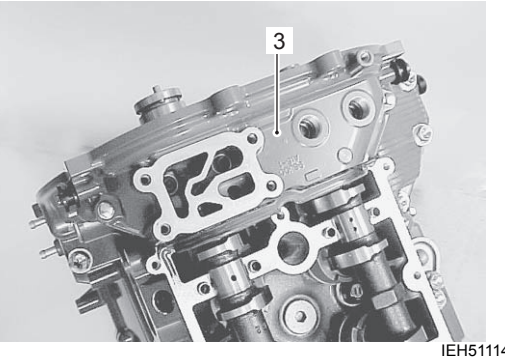

IEH511140241-03

3. Lower camshaft housing

7) Check position of camshaft housing. Install housings as indicated by these marks.

NOTE

Embossed marks are provided on each camshaft housing indicating position and direction of installation.

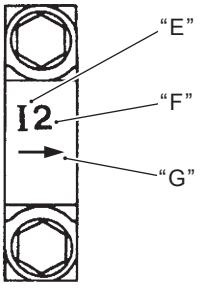

IDG211140103-01

"E":	I: Intake side, E: Exhaust side
"F":	Position from flywheel magneto side
"G":	Pointing to flywheel magneto side

8) Lightly seat all housing bolts.
According to numerical order in figure, tighten bolts to 1/3 of specified torque, then 2/3 of specified torque and finally to full specified torque.

NOTE

Apply engine oil lightly to housing bolt.

Tightening torque
Camshaft housing bolt: 12 N·m (1.2 kgf-m, 8.5 lbf-ft)

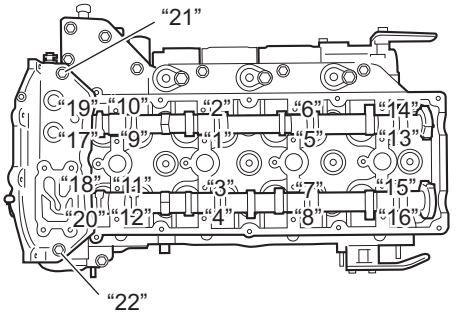

IEH511140242-03

9) Install plugs (4) in lower camshaft housing.

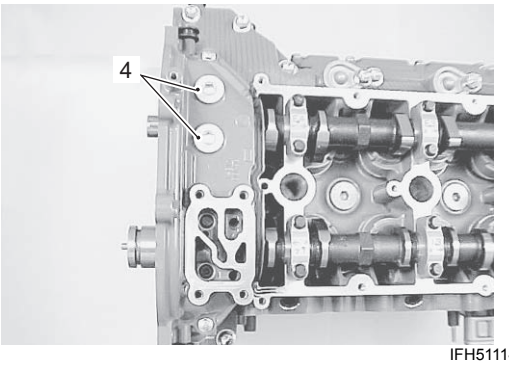

IFH511140022-01

10) Install timing chain and balancer chain.
Refer to "Timing Chain, Camshaft Sprocket, Balancer Chain Removal and Installation" (Page 1D-29).

11) Check tappet clearance and adjust as necessary.
Refer to "Tappet Clearance Inspection and Adjustment" in Section 0B (Page 0B-9).

Camshaft, Tappet and Shim Inspection

CENFH5111406021

NOTE

If any component is worn excessively, cracked, defective or damaged in any way, it must be replaced.

Cam Face
Inspect cam face for scratches and wear.
If any of the above conditions are found, replace camshaft.

Cam Wear
Using micrometer, measure cam height.
If measurement exceeds service limit, replace camshaft.

Special tool
TOOL : 09900–20202 (Micrometer (25 – 50 mm))

Cam height "a"

		Standard	Service limit
DF200A	IN.	45.330 – 45.490 mm (1.7846 – 1.7909 in)	45.230 mm (1.7807 in)
	EX.	44.420 – 44.580 mm (1.7488 – 1.7551 in)	44.320 mm (1.7449 in)

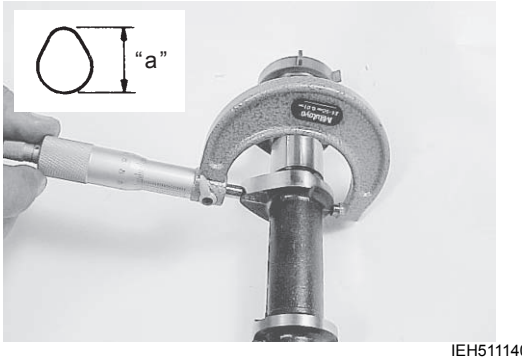

IEH511140244-03

Camshaft Identification
Camshaft identification is as follows.

Model	Identification mark	
	IN.	EX.
DF200A	L	D

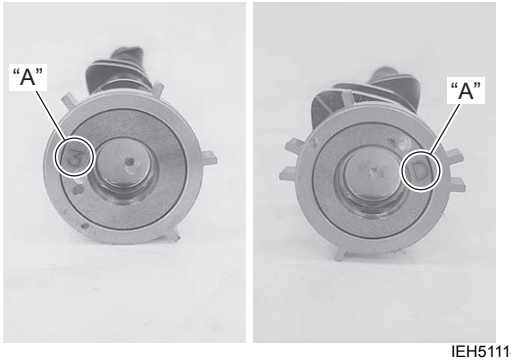

IEH511140245-04

"A": I.D. mark

Camshaft Runout
Support camshaft on a surface plate using a set of V-blocks.
Measure runout using a dial gauge.
If measurement exceeds service limit, replace camshaft.

Special tool
(A): 09900–20606 (Dial gauge)
(B): 09900–20701 (Magnetic stand)

Camshaft runout
Service limit: 0.10 mm (0.004 in.)

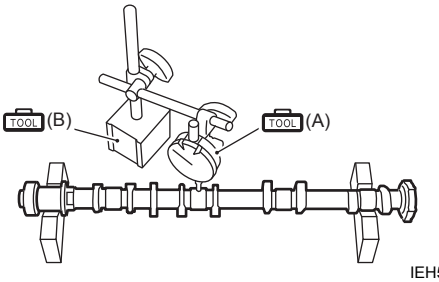

IEH511140390-02

Camshaft Journal Wear
Check camshaft journals and camshaft housings for pitting, scratches, wear or damage.
If any of the above conditions are found, replace camshaft or cylinder head with housing.

NOTE

Camshaft housing and cylinder head must be replaced as a set.

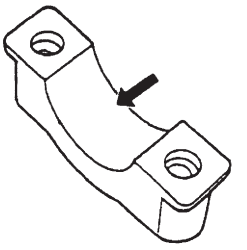

I9J011140030-01

Camshaft Journal Oil Clearance
Check journal oil clearance using Plastigauge as follows.

1) Clean housings and camshaft journals.
2) Install camshaft to cylinder head.
3) Place Plastigauge across the full width of camshaft journal (parallel to camshaft).

Special tool
(A): 09900–22301 (Plastigauge (0.025 – 0.076 mm))
(A): 09900–22302 (Plastigauge (0.051 – 0.125 mm))

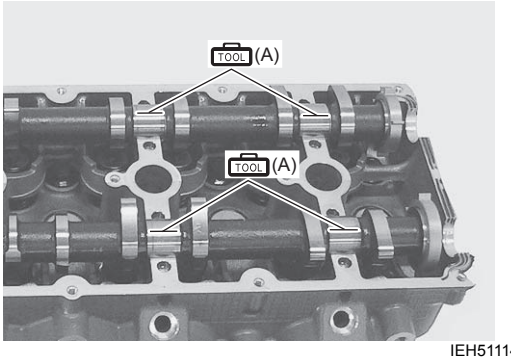

IEH511140246-05

4) Install camshaft housings. Tighten housing bolts in 3 steps (1/3 of specification, 2/3 of specification, full torque specification) in the indicated order.

Tightening torque
Camshaft housing bolt: 12 N·m (1.2 kgf-m, 8.5 lbf-ft)

NOTE

Do not rotate camshaft while Plastigauge is installed.

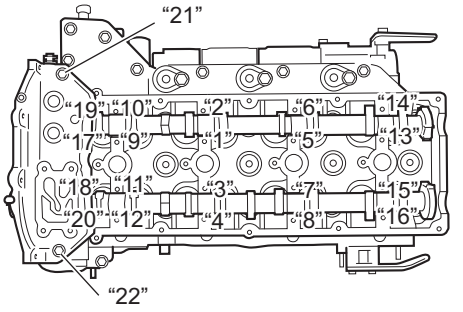

IEH511140247-03

5) Remove camshaft housings.

6) Using scale (1) on Plastigauge envelope, measure Plastigauge (2) at its widest point.

Camshaft journal oil clearance
Standard: 0.043 – 0.085 mm (0.0017 – 0.0033 in.)
Service limit: 0.120 mm (0.0047 in.)

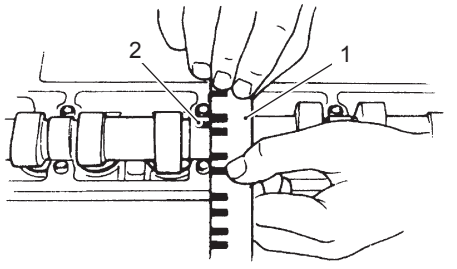

IDG211140184-02

1. Scale	2. Plastigauge

If journal oil clearance exceeds the service limit, measure camshaft journal (outside dia.) and camshaft housing (inner dia.). Based on measurements, replace camshaft and/or cylinder head with camshaft housing.

Camshaft journal outside diameter
Standard: 25.936 – 25.957 mm (1.0211 – 1.0219 in.)

Camshaft journal (housing) inside diameter
Standard: 26.000 – 26.021 mm (1.0236 – 1.0244 in.)

Special tool
TOOL (B): 09900–20202 (Micrometer (25 – 50 mm))

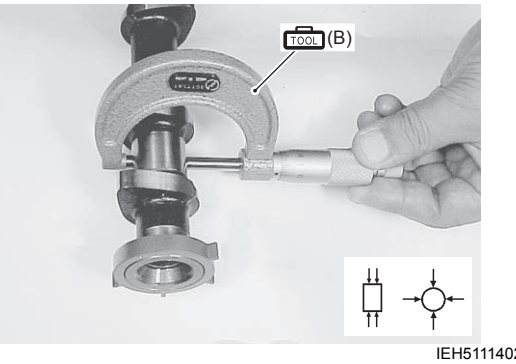

IEH511140248-04

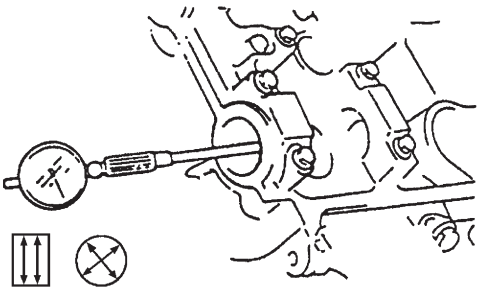

I9J011140200-02

Wear of Tappet and Shim
Check tappet and shim for pitting, scratches, or damage. If any above conditions are found, replace component.

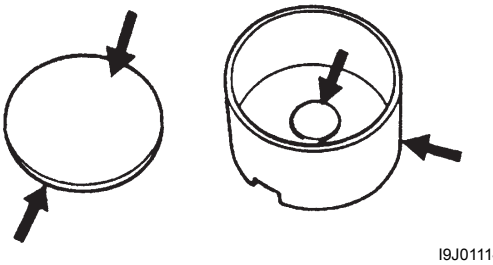

I9J011140076-01

Measure cylinder head bore and tappet outside diameter to determine cylinder head to tappet clearance.
If clearance exceeds service limit, replace tappet or cylinder head.

Special tool
TOOL : 09900–20202 (Micrometer (25 – 50 mm))

Cylinder head bore to tappet clearance
Standard: 0.025 – 0.066 mm (0.0010 – 0.0026 in.)
Service limit: 0.150 mm (0.0059 in.)

Tappet outer diameter
Standard: 33.959 – 33.975 mm (1.3370 – 1.3376 in.)

Cylinder head tappet bore
Standard: 34.000 – 34.025 mm (1.3386 – 1.3396 in.)

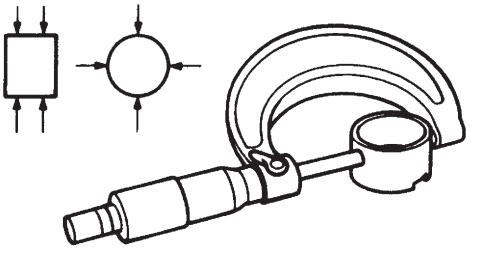

I9J011140031-01

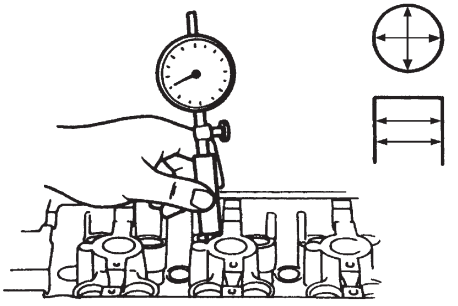

I9J011140032-01

Cylinder Head Removal and Installation

CENFH5111406022

Removal

1) Prior to removing cylinder head assembly;
   - Remove the power unit.
     Refer to “Power Unit Removal and Installation” (Page 1D-20).
   - Remove the timing chain.
     Refer to “Timing Chain, Camshaft Sprocket, Balancer Chain Removal and Installation” (Page 1D-29).
   - Remove the IN. and EX. camshafts.
     Refer to “Camshaft, Tappet and Shim Removal and Installation” (Page 1D-38).
2) Loosen and remove twenty cylinder head bolts in the order indicated in figure.
   Remove cylinder head assembly and head gasket.

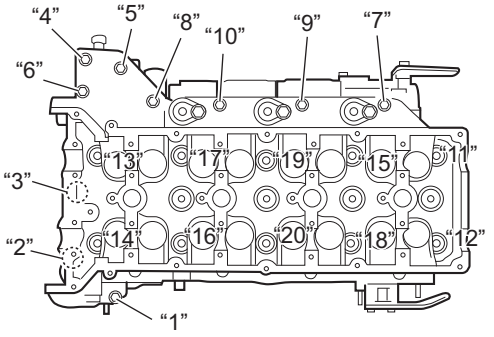

IEH511140249-03

NOTE

Do not forget to remove all bolts shown in figure.

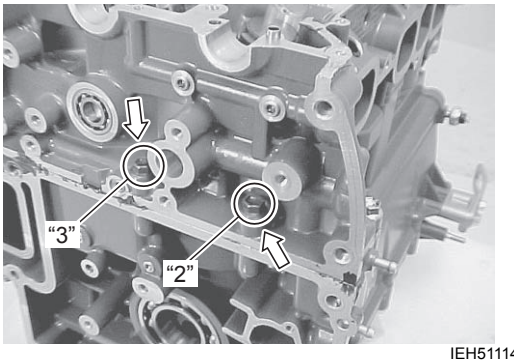

IEH511140250-03

Installation

Installation is in reverse order of removal paying special attention to the following steps.

NOTICE

A previously used gasket may leak combustion gas and/or cooling water, resulting in engine damage.

Do not reuse gasket once removed. Always use a new gasket.

1) Insert the dowel pins (1) and place a new cylinder head gasket (2) into position on the cylinder.

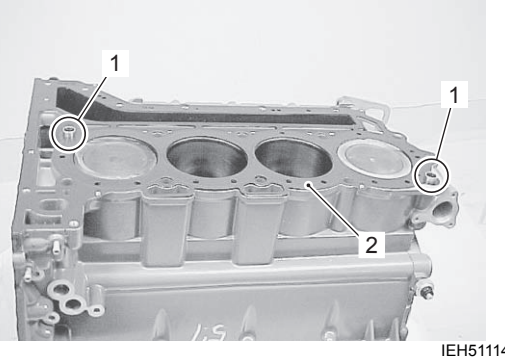

IEH511140251-03

2) Position cylinder head on cylinder.
3) Apply engine oil to cylinder head bolts and tighten them gradually as follows.
   a) Tighten all cylinder head bolts to 50 percent (%) of specified torque according to sequence in figure.

Tightening torque
Cylinder head bolt (1st step) [12 mm]: 43 N·m (4.3 kgf-m, 31.0 lbf-ft)
Cylinder head bolt (1st step) [8 mm]: 12 N·m (1.2 kgf-m, 8.5 lbf-ft)

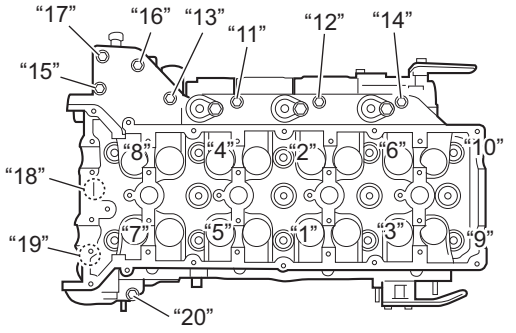

IEH511140253-03

NOTE

Do not forget to install all bolts shown in figure.

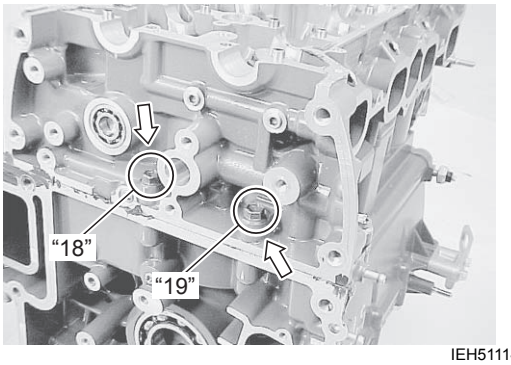

IEH511140254-03

   b) Loosen all cylinder head bolts to 0 N·m (0 kgf-m, 0 lbf-ft.) according to reverse sequence in figure.
   c) Again tighten all cylinder head bolts to 50 percent (%) of specified torque according to sequence in figure.

Tightening torque
Cylinder head bolt (3rd step) [12 mm]: 43 N·m (4.3 kgf-m, 31.0 lbf-ft)
Cylinder head bolt (3rd step) [8 mm]: 12 N·m (1.2 kgf-m, 8.5 lbf-ft)

   d) Finally tighten all cylinder head bolts to specified torque according to sequence in figure.

Tightening torque
Cylinder head bolt (Final step) [12 mm]: 86 N·m (8.6 kgf-m, 62.0 lbf-ft)
Cylinder head bolt (Final step) [8 mm]: 23 N·m (2.3 kgf-m, 16.5 lbf-ft)

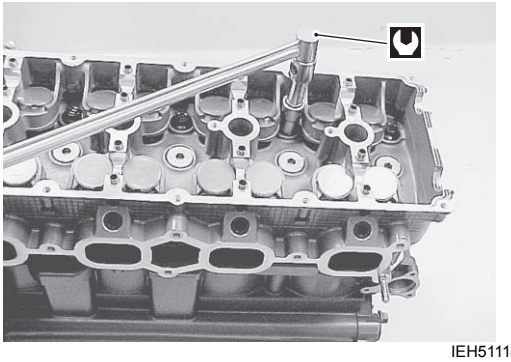
IEH511140255-03

4) Install the IN. and EX. camshafts.
   Refer to "Camshaft, Tappet and Shim Removal and Installation" (Page 1D-38).
5) Install the timing chain and balancer chain.
   Refer to "Timing Chain, Camshaft Sprocket, Balancer Chain Removal and Installation" (Page 1D-29).
6) Install oil pump.

Cylinder Head Disassembly and Assembly

CENFH5111406023

Disassembly

1) Using valve lifter and attachment, remove valve cotters (1) while compressing valve spring.

Special tool
TOOL (A): 09916–19030 (Valve lifter)
TOOL (B): 09916–14521 (Valve lifter attachment)
TOOL (C): 09916–84511 (Tweezers)

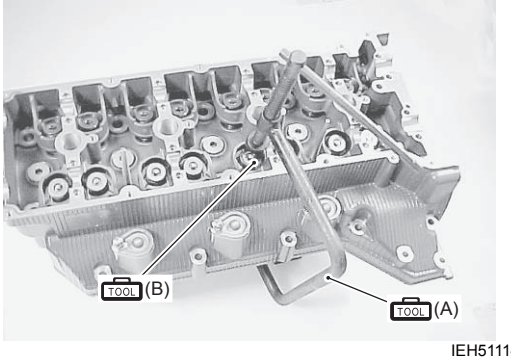

IEH511140256-03

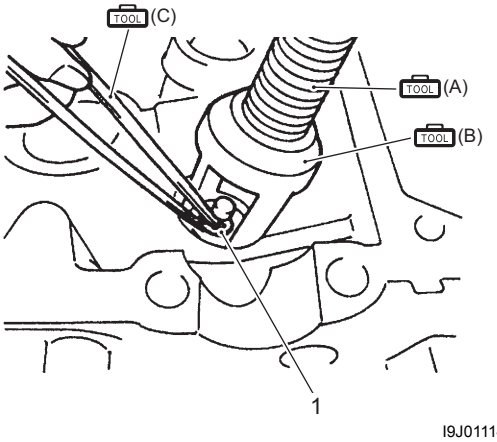

I9J011140209-01

2) Remove valve spring retainer (2), valve spring (3) and valve (4).

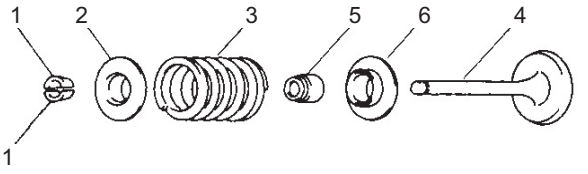

I9J011140210-01

3) Remove valve stem seal (5) and valve spring seat (6).

NOTE

Reassemble each valve and valve spring in their original positions.

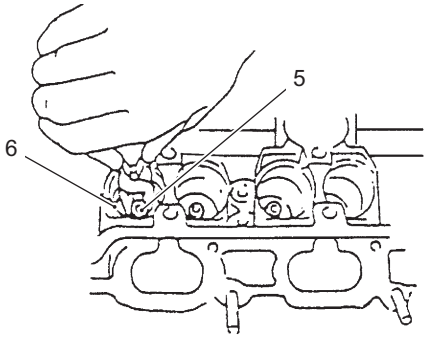

I9J011140211-02

Assembly

Reassemble in reverse order of disassembly paying special attention to the following steps.

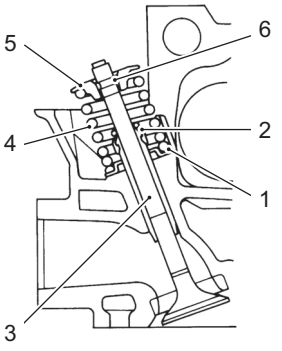

I9J011140212-03

1) Install valve spring seat (1) to cylinder head.

2) After applying engine oil to stem seal (2) and spindle of special tool (A), fit stem seal to spindle.
Then, pushing special tool by hand, install stem seal to valve guide.
Check to be sure that seal is properly fixed to valve guide.

NOTICE

Removing the stem seal can be damaged, causing oil to get down past the seal.

Do not reuse stem seal once removed. Always install new seal.

Special tool

TOOL (A): 09917–98221 (Valve guide stem seal installer attachment)

TOOL (B): 09916–57330 (Valve guide installer)

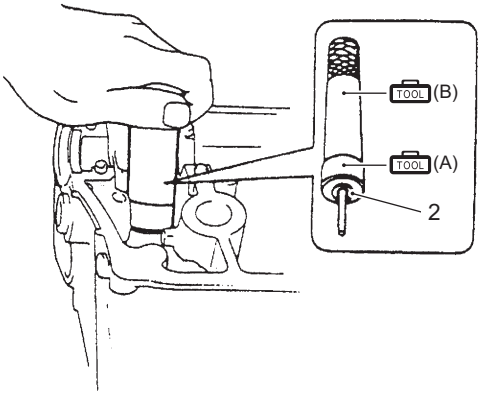

I9J011140033-03

3) Apply engine oil to stem seal, valve guide bore and valve stem.

4) Install valve (3) to valve guide.

NOTE

Reassemble each valve and valve spring to their original position.

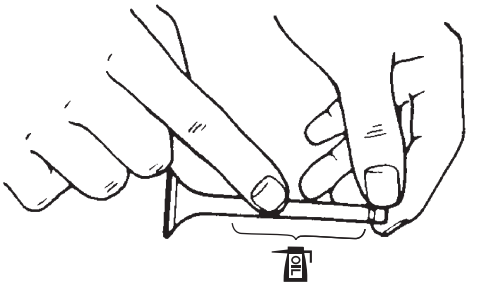

I9J011140034-01

5) Install valve spring (4) and valve retainer (5).
6) Hold valve spring compressed with special tool and install valve cotters (6).
Make sure valve cotters are properly seated in groove “A”.

NOTE

When compressing the valve spring, be careful not to damage the tappet hole.

Special tool
(C): 09916–19030 (Valve lifter)
(D): 09916–14521 (Valve lifter attachment)
(E): 09916–84511 (Tweezers)

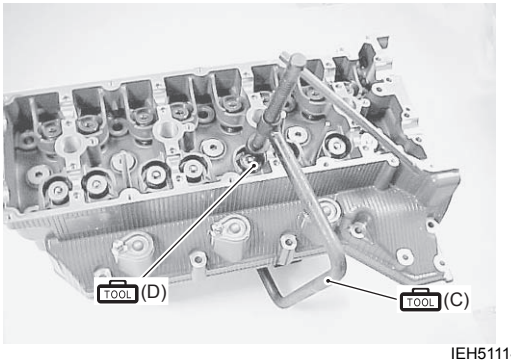

IEH511140257-03

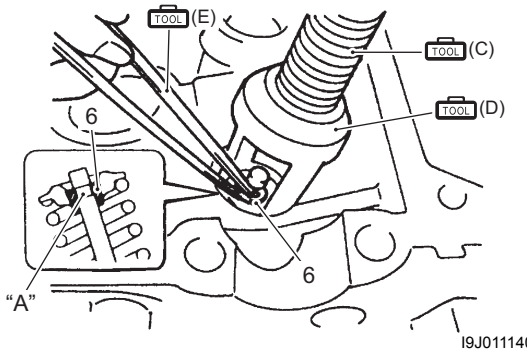

I9J011140036-02

Cylinder Head Components Inspection and Servicing

CENFH5111406024

NOTE

If cracks, excessive wear or other damage is found on any component, replace component.

Cylinder Head

- Remove all carbon from combustion chambers.

NOTE

- **Do not use any sharp edged tool to scrape carbon off cylinder head or its components.**
- **Be careful not to scuff or nick metal surfaces when decarbonizing.**

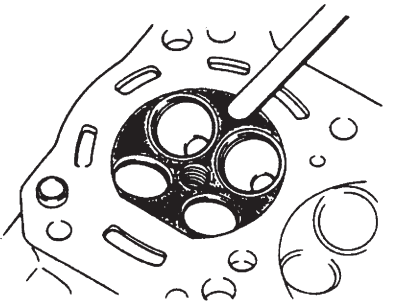

I9J011140037-01

- Check cylinder head for cracks in intake and exhaust ports, combustion chambers, and head surface.
- Check valve seat, if cracks or other damage is found, replace cylinder head.

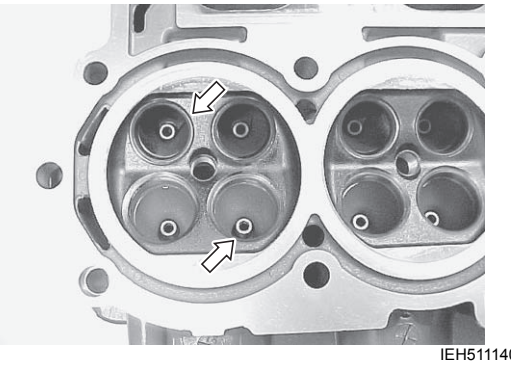

IEH511140258-03

- Check water jackets. If clogged or obstructed, clean water jackets.

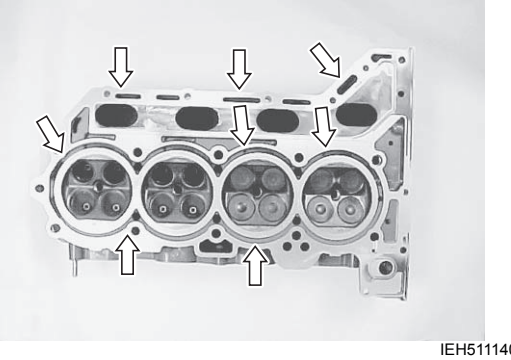

IEH511140259-03

Cylinder head distortion

- Using a straightedge and thickness gauge, measure cylinder head distortion (gasket surface) at a total of six locations as shown.
  If measurement exceeds service limit, resurface or replace cylinder head.

Special tool
(A): 09900–20803 (Thickness gauge)

Cylinder head distortion
Service limit: 0.05 mm (0.002 in.)

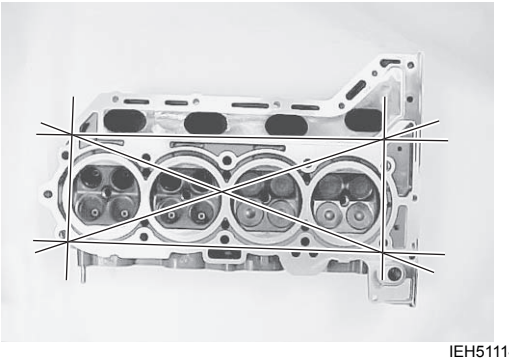

IEH511140260-03

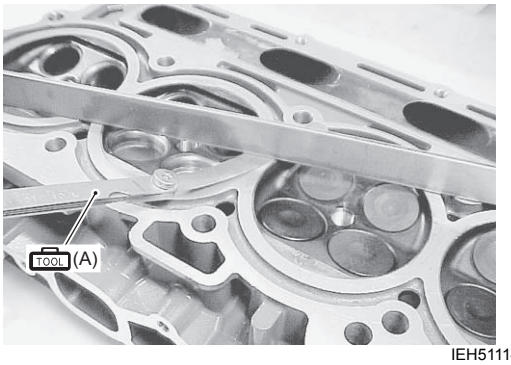

IEH511140261-03

Manifold seating faces distortion
Using a straightedge and thickness gauge, check cylinder head to manifold seating faces.
If measurement exceeds service limit, resurface or replace cylinder head.

Special tool
(A): 09900–20803 (Thickness gauge)

Manifold seating faces distortion
Service limit: 0.10 mm (0.004 in.)

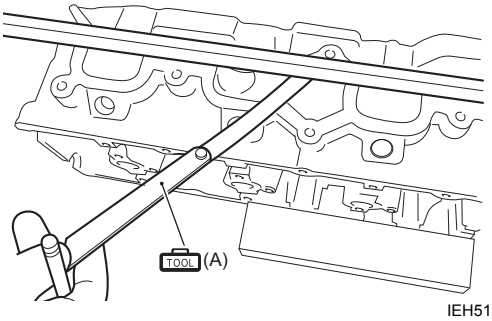

IEH511140262-03

Valve and Valve Guide
Valve guide to valve stem clearance
Using a micrometer and bore gauge, take diameter readings on valve stems and guides to check guide to stem clearance.
Be sure to take readings at more than one place along the length of each stem and guide.
If measurement exceeds service limit, replace valve and/or valve guide.
Refer to “Valve guide replacement” (Page 1D-50).

Special tool
(A): 09900–20205 (Micrometer (0 – 25 mm))

Valve stem outside diameter
Using micrometer, measure valve stem outside diameter.

Valve stem outside diameter
Standard (IN.): 5.465 – 5.480 mm (0.2152 – 0.2157 in.)
Standard (EX.): 5.440 – 5.455 mm (0.2142 – 0.2148 in.)

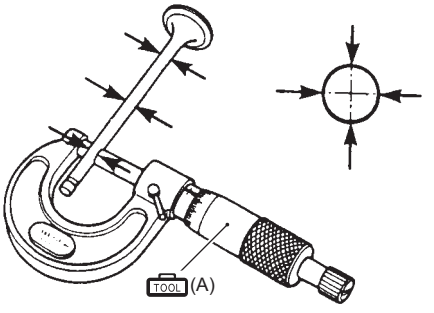

I9J011140039-02

Valve guide inside diameter
Using a small bore gauge, measure valve guide inside diameter.

Valve guide inside diameter
Standard (IN., EX.): 5.500 – 5.512 mm (0.2165 – 0.2170 in.)

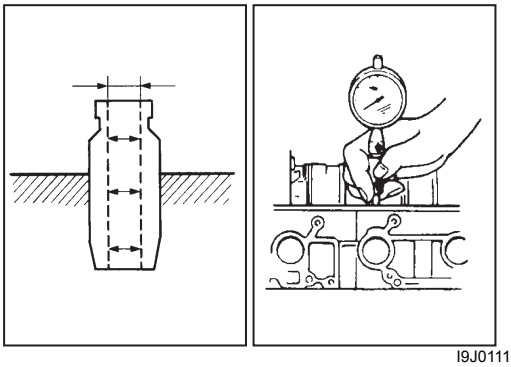

I9J011140040-01

Valve guide to valve stem clearance
Standard (IN.): 0.020 – 0.047 mm (0.0008 – 0.0019 in.)
Standard (EX.): 0.045 – 0.072 mm (0.0018 – 0.0028 in.)
Service limit (IN.): 0.070 mm (0.0028 in.)
Service limit (EX.): 0.090 mm (0.0035 in.)

Valve stem deflection
If unable to measure valve guide inside diameter, check "Valve stem deflection".
If measurement exceeds service limit, replace valve.
If measurement still exceeds service limit with new valve, replace valve guide.
Measure valve stem deflection as follows;

1) Install valve into valve guide.
2) Position valve head at approx. 5 mm away from valve seat.
3) Move valve head in the direction "a" – "b", and measure deflection.

Special tool
TOOL (A): 09900–20606 (Dial gauge)
TOOL : 09900–20701 (Magnetic stand)

Valve stem deflection
Service limit (IN.): 0.14 mm (0.006 in.)
Service limit (EX.): 0.18 mm (0.007 in.)

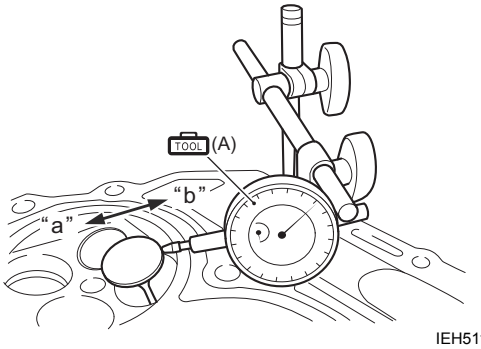

IEH511140263-03

Valve stem end
Inspect valve stem end face for pitting and wear.
If pitting or wear is found, valve stem end may be resurfaced.
Use caution when resurfacing, do not grind away stem end chamfer.
When chamfer has been worn away, replace valve.

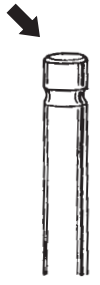
I9J011140041-01

Valve stem runout
Measure valve stem runout.
If measurement exceeds service limit, replace valve.

Special tool
TOOL (A): 09900–20606 (Dial gauge)
TOOL (B): 09900–20701 (Magnetic stand)
TOOL (C): 09900–21304 (Steel "V" block set)

Valve stem runout
Service limit: 0.05 mm (0.0020 in.)

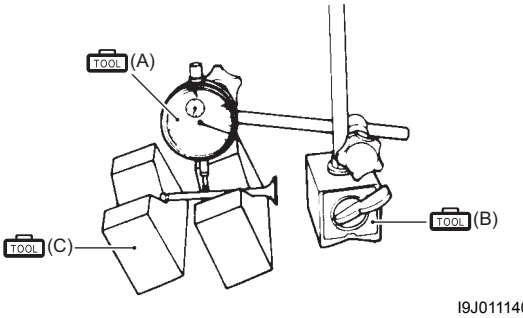

I9J011140042-02

Valve head radial runout
Measure valve head radial runout.
To measure runout, rotate valve slowly.
If measurement exceeds service limit, replace valve.

Special tool
TOOL (A): 09900–20606 (Dial gauge)
TOOL (B): 09900–21304 (Steel "V" block set)
TOOL : 09900–20701 (Magnetic stand)

Valve head radial runout
Service limit: 0.08 mm (0.003 in.)

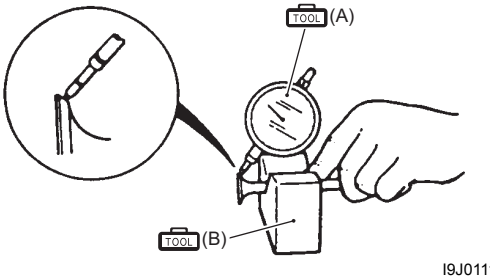

I9J011140043-03

Valve head thickness
Measure thickness "a" of valve head.
If measurement exceeds service limit, replace valve.

Special tool
TOOL : 09900–20101 (Vernier calipers (150 mm))

Valve head thickness
Standard (IN.): 1.1 mm (0.04 in.)
Standard (EX.): 1.0 mm (0.04 in.)
Service limit (IN.): 0.7 mm (0.03 in.)
Service limit (EX.): 0.7 mm (0.03 in.)

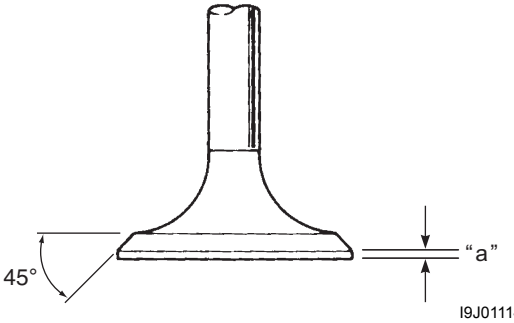

I9J011140044-01

Valve seat contact width

Measure valve seat contact width as follows:

1) Remove all carbon from valve and seat.
2) Coat valve seat evenly with Prussian Blue (or equivalent).
3) Install valve into valve guide.
4) Put valve lapper on valve.

Special tool
TOOL (A): 09916–10911 (Valve lapper)

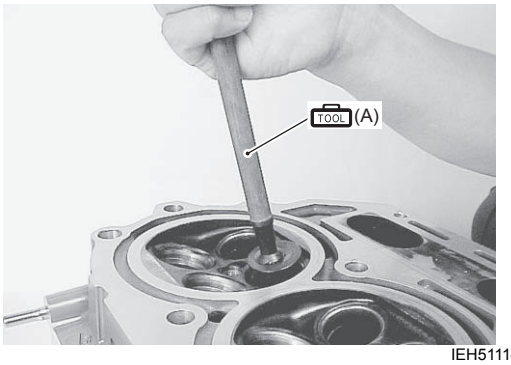

IEH511140264-01

5) Rotate valve while gently tapping valve contact area against seat.
6) Continue until a pattern is on valve seat face with Prussian Blue.
7) Measure valve seat contact width “a”.

Special tool
TOOL : 09900–20101 (Vernier calipers (150 mm))

Valve seat contact width “a”
Standard (IN., EX.): 1.1 – 1.3 mm (0.04 – 0.05 in.)

If measurement exceeds specification, repair valve seat.
Refer to “Valve seat servicing” (Page 1D-49).

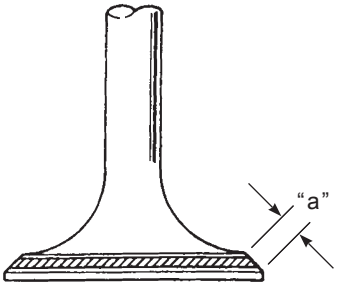

IEH511140392-01

Valve seat servicing

If valve seat contact width is out of specification, reface valve seat as follows:

Valve seat angle
IN. & EX.: 30°/45°/60°

IN., EX.

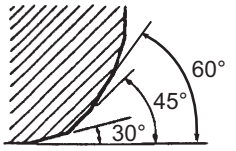

IFH511140025-01

To reface a valve seat, use the following valve seat cutting tool.

- Intake side
  - Valve seat cutter 30° x 45° (Neway 626)
  - Valve seat cutter 60° (Neway 205)
- Exhaust side
  - Valve seat cutter 30° x 45° (Neway 230)
  - Valve seat cutter 60° (Neway 270)
- Solid pilot (Neway, N-150-5.5)
- Handle (Neway, N-505) (09916-54910)

NOTE

Turn cutter clockwise, never counterclockwise.

1) Remove all carbon from valve and valve seat.
2) Using 45° angle cutter, reface valve seat.
3) Check valve seat contact width “a”.
Refer to “Valve seat contact width” (Page 1D-49).

Too high (wide)

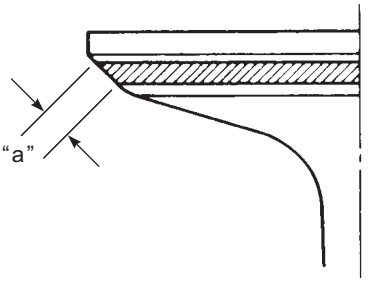

I9J011140047-01

Too low (narrow)

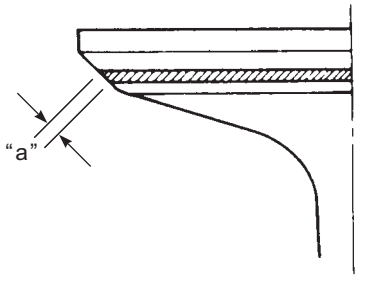

I9J011140048-01

- If width “a” is too high (or wide), reface valve seat using 30° angle cutter.
- If width “a” is too low (or narrow), reface valve seat using 60° angle cutter.

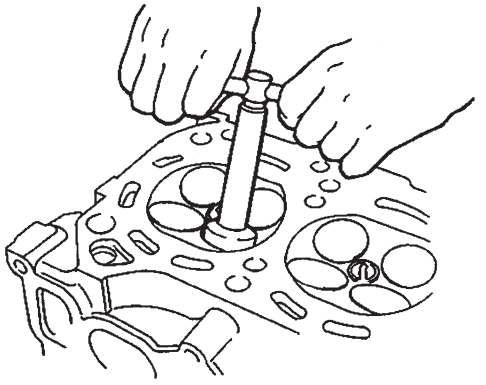

IEH511140266-03

4) Clean up any burrs using 45° angle cutter very lightly.

NOTE

Cut seat areas minimally only.
Do not cut more than necessary.

5) Lap valve on seat in two steps, first with coarse grit lapping compound applied to face and the second with fine grit compound.
6) Recheck valve seat contact width “a”.

NOTE

Clean and assemble cylinder head and valve components.
Fill intake and exhaust ports with solvent to check for leaks between valve seat and valve. If any leaks occur, inspect valve seat and face for burrs or other things that could prevent valve from sealing.

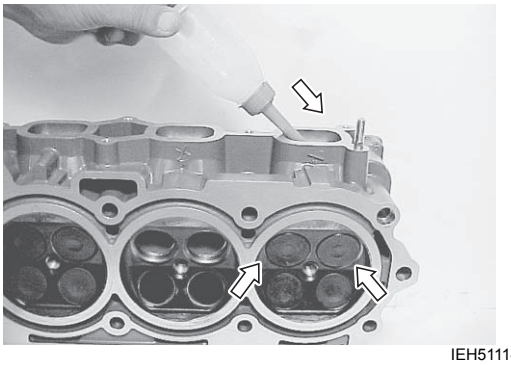

IEH511140267-03

Valve guide replacement

NOTE

Be careful not to damage cylinder head when replacing valve guide.

1) Using valve guide remover, drive valve guide out from combustion chamber side towards valve spring side.

NOTE

Do not reuse valve guide once it has been removed.
Always use a new valve guide (oversize) when assembling.

Special tool
TOOL (A): 09916–44310 (Valve guide remover)

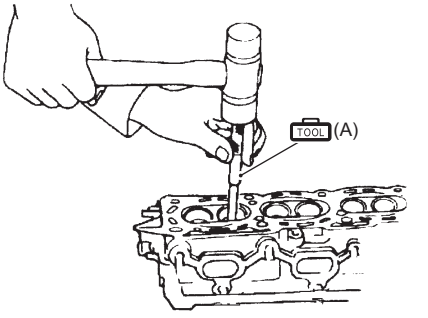

I9J011140050-01

2) Ream valve guide hole with ø 10.5 mm reamer to true hole and remove burrs.

NOTICE

Improper handling of the reamer will cause damage to the valve guide hole.

When refinishing or removing the reamer from the valve guide hole, always turn it clockwise.

Special tool
TOOL (B): 09916–37320 (Valve guide reamer (ø 10.5 mm))
TOOL (C): 09916–34542 (Valve guide reamer handle)

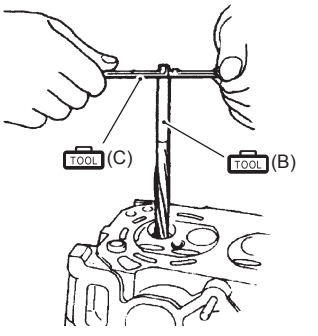

IEH511140268-03

3) Install valve guide to cylinder head.
   - Heat cylinder head to a temperature of 80 – 100 °C (176 – 212 °F).
     Apply heat uniformly so that head will not be distorted.
   - Use special tools to drive new valve guide into hole.
     Drive in new valve guide until special tool (valve guide installer attachment) contacts cylinder head.
   - After installing, check valve guide protrusion “a”.

   Special tool
   TOOL (D): 09916–57330 (Valve guide installer)
   TOOL (E): 09916–56011 (Valve guide installer attachment)

   Valve guide protrusion “a”
   Standard (IN., EX.): 11.4 – 11.8 mm (0.45 – 0.46 in.)

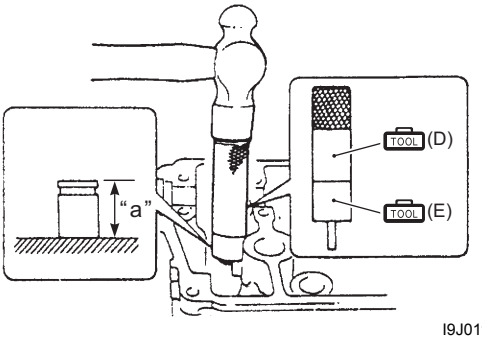

I9J011140052-01

4) Ream valve guide bore with ø 5.5 mm reamer.

NOTE

Clean and oil valve guide bore after reaming.

Special tool
TOOL (F): 09916–34550 (Valve guide reamer (ø 5.5 mm))
TOOL (C): 09916–34542 (Valve guide reamer handle)

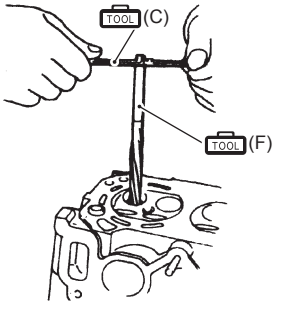

IEH511140269-03

Valve spring free length
Check spring strength by measuring free length.
If lower than service limit, replace valve spring.

Special tool
TOOL (A): 09900–20101 (Vernier calipers (150 mm))

Valve spring free length
Standard (IN., EX.): 39.75 mm (1.56 in.)
Service limit (IN., EX.) 38.20 mm (1.50 in.)

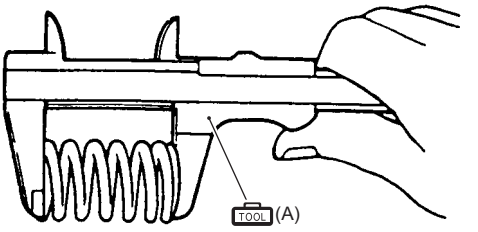

I9J011140054-02

Valve spring preload
Measure valve spring preload.
If lower than service limit, replace valve spring.

Special tool
TOOL : 09900–20101 (Vernier calipers (150 mm))

Valve spring preload
Standard (IN., EX.): 147 – 173 N (14.7 – 17.3 kg, 32.4 – 38.1 lbs.) at 31.1 mm (1.22 in.)
Service limit (IN., EX.): 136 N (13.6 kg, 30.0 lbs.) at 31.1 mm (1.22 in.)

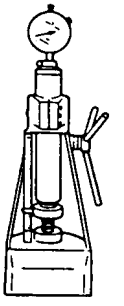

I9J011140055-01

Valve spring squareness
Use a square and surface plate to check each spring for squareness (clearance between end of valve spring and square).
If measurement exceeds service limit, replace valve spring.

Special tool
TOOL : 09900–20101 (Vernier calipers (150 mm))

Valve spring squareness "a"
Service limit (IN., EX.): 2.0 mm (0.08 in.)

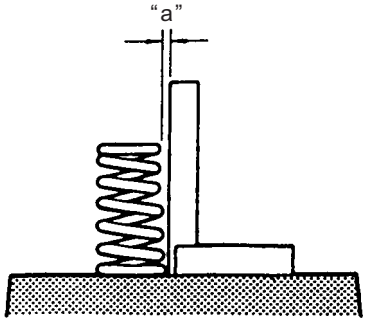

I9J011140056-02

Counter-Balancer Mechanism Removal and Installation

CENFH5111406025

Removal

1) Remove the power unit.
   Refer to "Power Unit Removal and Installation" (Page 1D-20).
2) Remove the balancer chain.
   Refer to "Timing Chain, Camshaft Sprocket, Balancer Chain Removal and Installation" (Page 1D-29).
3) Remove the bolts securing balancer cover (1) to crankcase, then remove balancer cover.

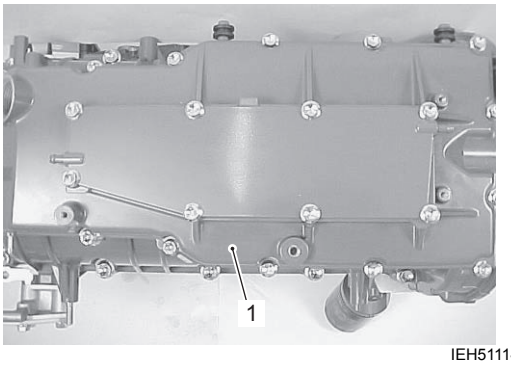

IEH511140270-05

4) Remove the seven bolts securing counter-balancer mechanism assembly (2) to crankcase, then remove counter-balancer mechanism assembly.

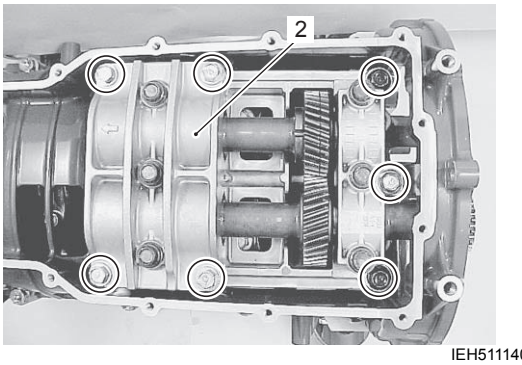

IEH511140271-05

Installation
Installation is reverse order of removal with special attention to the following steps.

NOTICE

A previously used gasket may leak, resulting in engine damage.

Do not reuse gasket once removed. Always use a new one.

1) Insert the dowel pins (1).

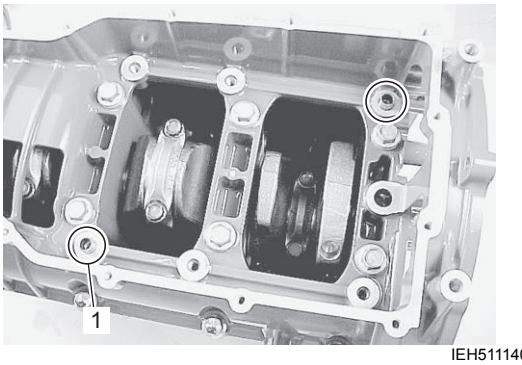

IEH511140272-05

2) Place counter-balancer mechanism assembly (2) into position on the crankcase.

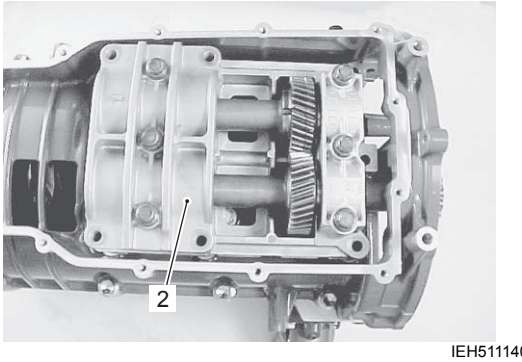

IEH511140273-05

3) Apply engine oil to balancer housing bolts.
Lightly seat all balancer housing bolts at first.
Following sequence in figure, tighten bolts in 3-steps.
Tighten bolts to 1/3 of specified torque, then 2/3 of specified torque and finally to full specified torque.

Tightening torque
Balancer mechanism mounting bolt (a): 25 N·m (2.5 kgf-m, 18.0 lbf-ft)

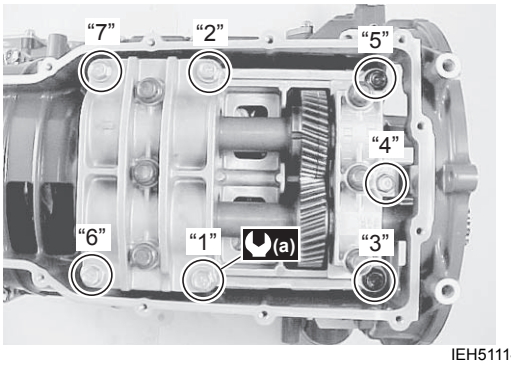

IEH511140378-04

Counter-Balancer Mechanism Disassembly and Assembly

CENFH5111406026

Disassembly

1) Remove the three bolts and upper housing (1).
2) Remove the three bolts and lower housing (2).

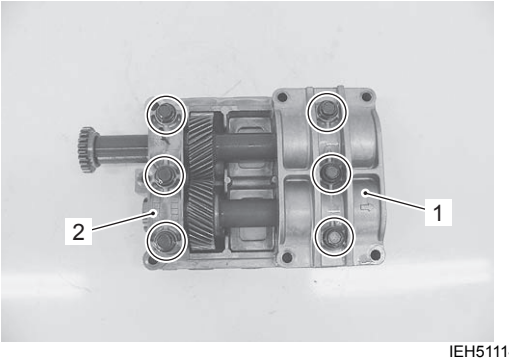

IEH511140379-03

3) Remove STBD balancer shaft assembly (3).
Remove PORT balancer shaft assembly (4).

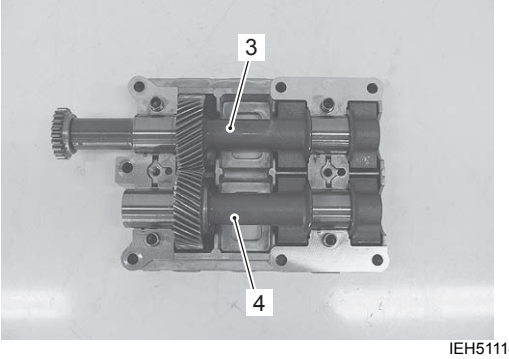

IEH511140380-04

4) Secure STBD balancer shaft in a vise, then remove bolt (5), washer (6) and driven sprocket (7).
Account for dowel pin (8).

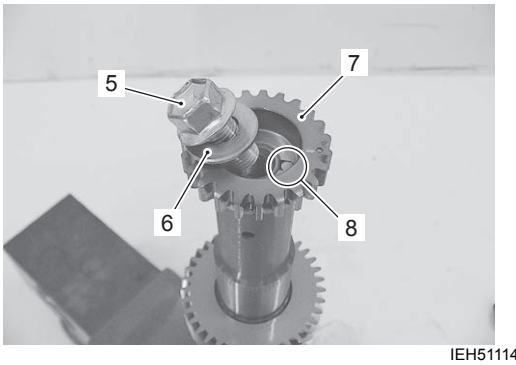

IEH511140277-04

Assembly

1) Secure STBD balancer shaft in a vise.
Install dowel pin (1), driven sprocket (2) and washer (3), then tighten bolt (4) to specified torque.

Tightening torque
Balancer driven sprocket (a): 48 N·m (4.8 kgf-m, 34.5 lbf-ft)

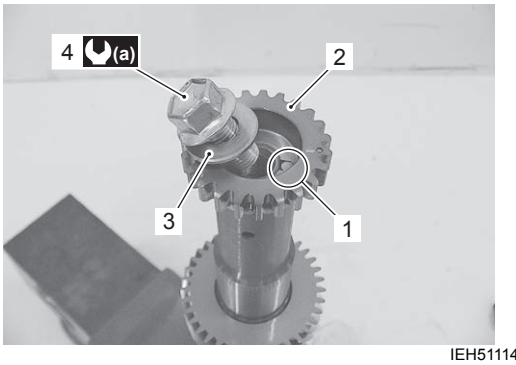

IEH511140278-04

2) Install bearings (5) in base housing (6), upper housing (7) and lower housing (8).
Apply molybdenum oil solution to each bearing.

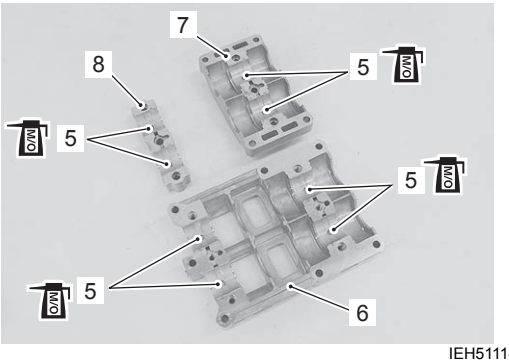

IEH511140279-04

NOTE

- **Align bearing tab "A" with notch in each housing.**
- **Assemble each bearing in its original position.**

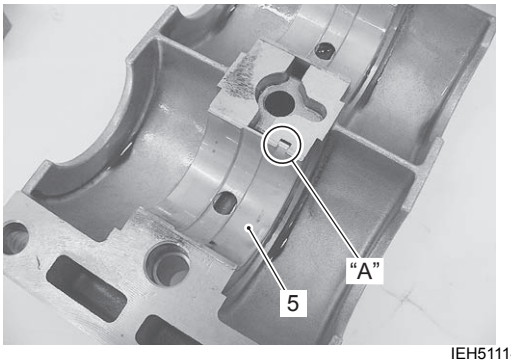

IEH511140280-04

3) Apply molybdenum oil solution to balancer shaft journals.

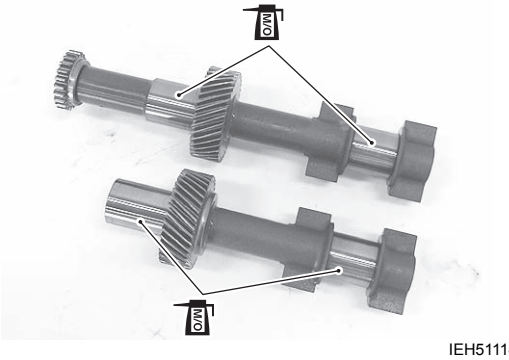

IEH511140381-04

4) Install dowel pins (9).

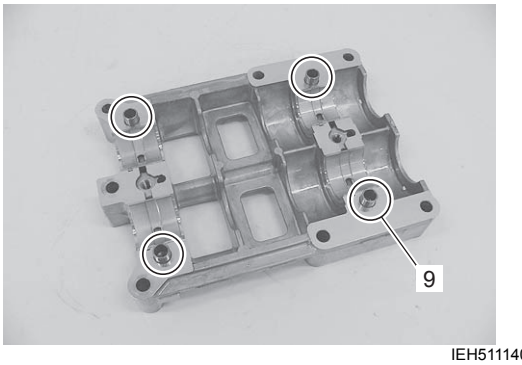

IEH511140282-04

5) Install PORT balancer shaft assembly (10) in base housing.

6) Install STBD balancer shaft (11) in base housing so that match mark (•) "B" on STBD balancer gear aligns with match mark (•) "B" on PORT balancer gear as shown in figure.

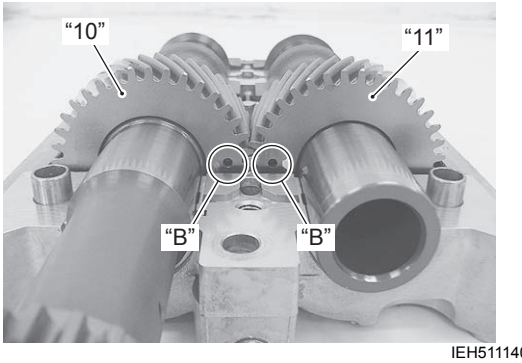

IEH511140382-03

"B": Match mark (•)

7) Install upper housing (7) to base housing with arrow mark on upper housing toward flywheel side.
Install lower housing (8) to base housing.

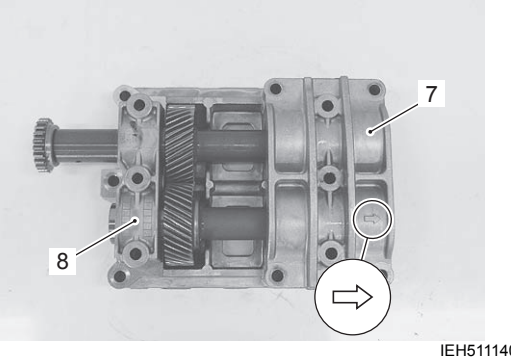

IEH511140383-04

8) Apply engine oil to housing bolts.
Lightly seat all housing bolts at first.
Following sequence in figure, tighten bolts in 2-steps.
Tighten bolts to 80 percent (%) of specified torque, then to full specified torque.

Tightening torque
Balancer housing bolt (b): 46 N·m (4.6 kgf-m, 33.3 lbf-ft)

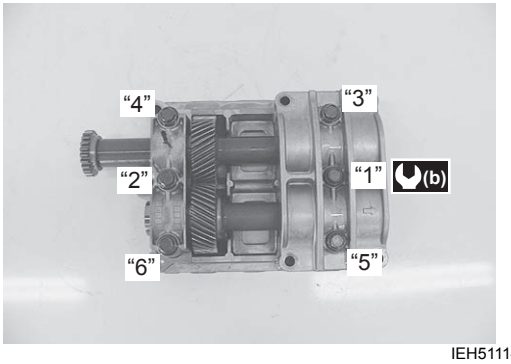

IEH511140384-04

Counter-Balancer Mechanism Component Inspection

CENFH5111406027

NOTE

If any component is worn excessively, cracked, defective or damaged in any way, it must be replaced.

Balancer Gear
Inspect balancer gears. Replace gear if damaged, worn excessively or other abnormal condition.

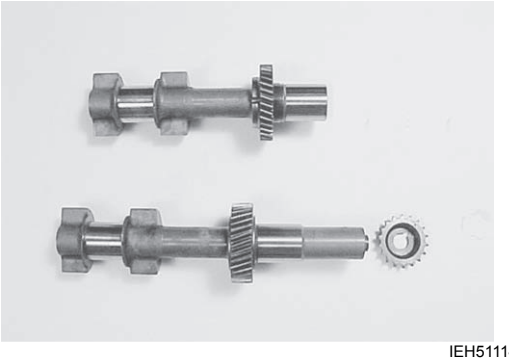

IEH511140286-05

Bearing
Check bearings for pitting, scratches, wear or damage.
If any improper condition is found, replace both upper and lower halves.
Always replace both bearing halves, never replace only one half of a bearing set.



IEH511140287-04

Balancer Shaft Journal
Check balancer shaft journals for pitting, scratches, wear or damage.
If any of the above condition are found, replace balancer shaft.

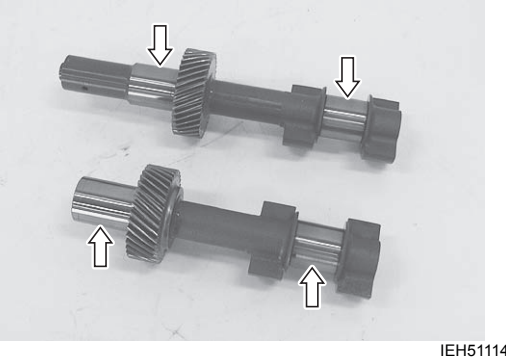

IEH511140288-04

Housing
Check base housing, upper housing and lower housing.
If cracks or other damage are found, replace housings as a set.

NOTE

Base housing, upper housing and lower housing must be replaced as a set.



IEH511140358-04

Pistons, Piston Rings, Connecting Rods, Cylinder and Crankshaft Components

CENFH5111406028

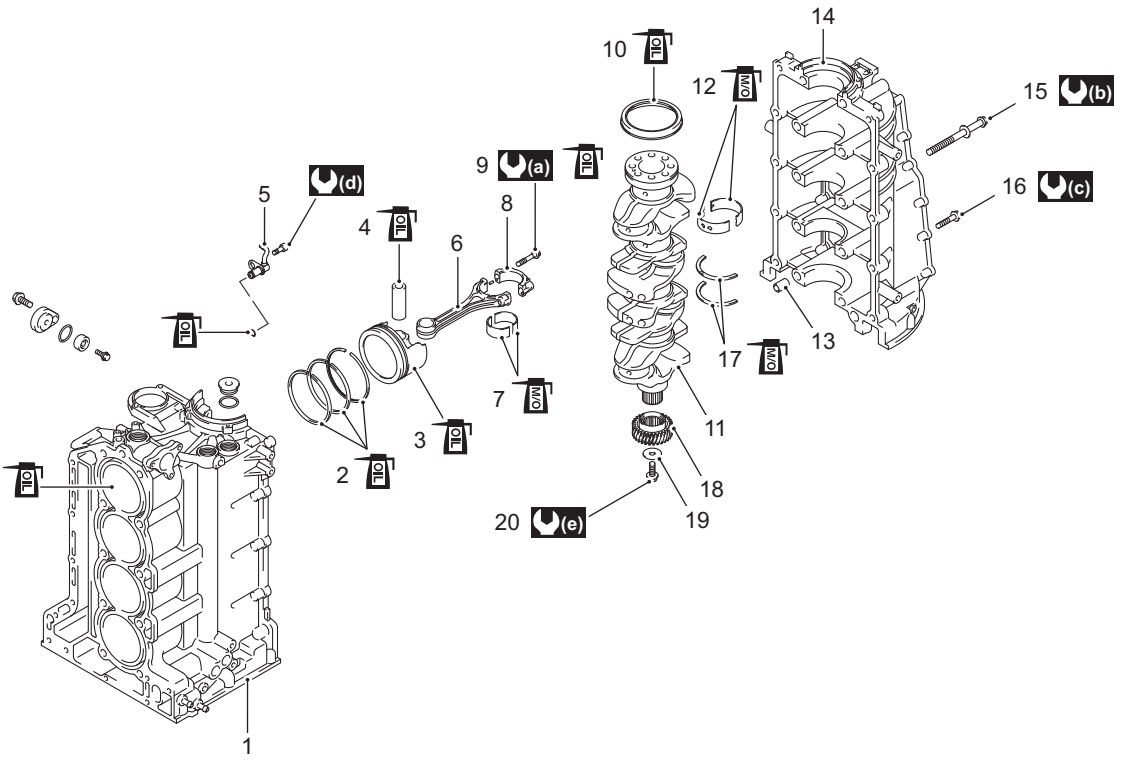

IFH511140026-01

1. Cylinder block	8. Conrod cap	15. Crankcase (inside) bolt	(b) : 58 N·m (5.8 kgf-m, 42.0 lbf-ft)
2. Piston ring set	9. Conrod cap bolt	16. Crankcase (outside) bolt	(c) : 37 N·m (3.7 kgf-m, 27.0 lbf-ft)
3. Piston	10. Oil seal	17. Thrust bearing	(d) : 11 N·m (1.1 kgf-m, 8.0 lbf-ft)
4. Piston pin	11. Crankshaft	18. Drive gear	(e) : 48 N·m (4.8 kgf-m, 34.5 lbf-ft)
5. Piston cooling jet	12. Crankshaft main bearing	19. Washer	OIL : Apply engine oil.
6. Conrod	13. Dowel pin	20. Bolt	O/M : Apply molybdenum oil solution.
7. Conrod bearing	14. Crankcase	(a) : 30 N·m (3.0 kgf-m, 21.5 lbf-ft), then plus turn in 60 degrees.	

Pistons, Piston Rings, Connecting Rods, Cylinder and Crankshaft Disassembly and Assembly

CENFH5111406029

Disassembly

1) Before performing service work in this section:
- Remove power unit.
  Refer to “Power Unit Removal and Installation” (Page 1D-20).
- Remove the timing chain and balancer chain.
  Refer to “Timing Chain, Camshaft Sprocket, Balancer Chain Removal and Installation” (Page 1D-29).
- Remove cylinder head.
  Refer to “Cylinder Head Removal and Installation” (Page 1D-43).
- Remove counter-balancer mechanism.
  Refer to “Counter-Balancer Mechanism Removal and Installation” (Page 1D-52).

2) Remove oil filter (1).

Special tool
TOOL (A): 09915–47341 (Oil filter wrench)

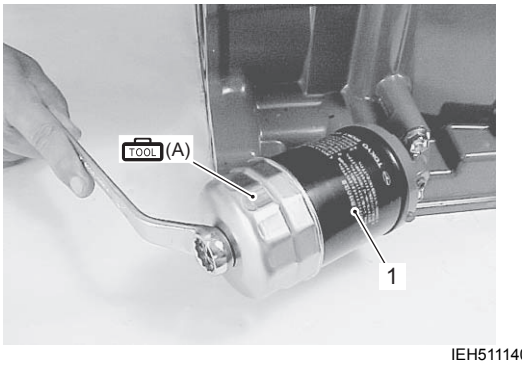

IEH511140289-03

3) Remove the three bolts securing oil filter stand (2), then remove oil filter stand.

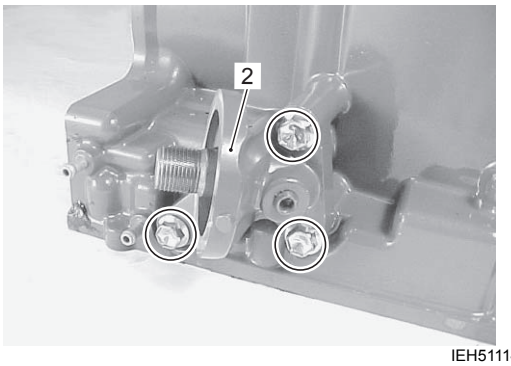

IEH511140290-03

4) Remove oil pressure switch (3).

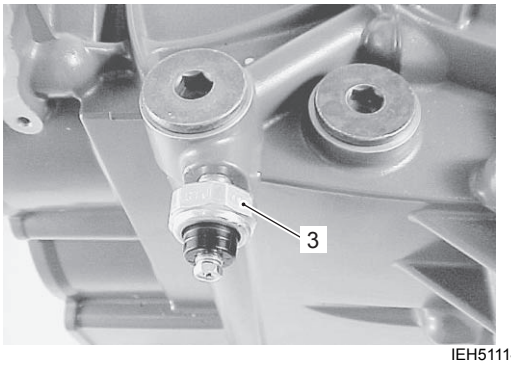

IEH511140291-03

5) Remove ten bolts (4).
Remove ten bolts (5).
Remove crankcase from cylinder block.

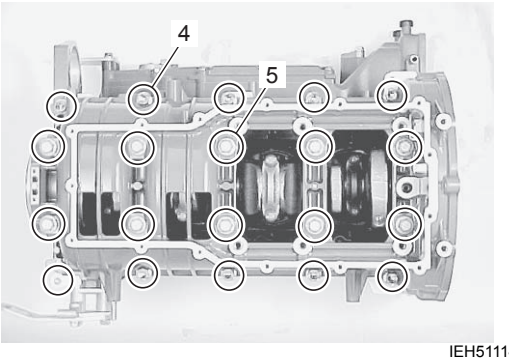

IEH511140292-03

NOTE

For proper assembly, mark cylinder number on all pistons, conrods, and conrod caps, using quick drying paint.

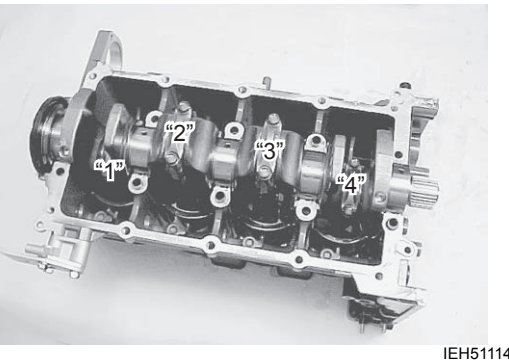

IEH511140293-03

6) Remove all conrod cap bolts (6) and conrod caps (7).

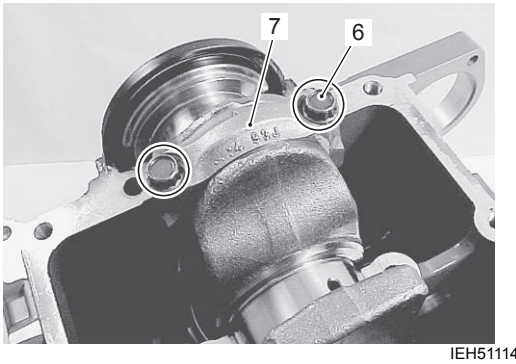

IEH511140294-03

7) Remove crankshaft (8).
Remove oil seal (9) from crankshaft.

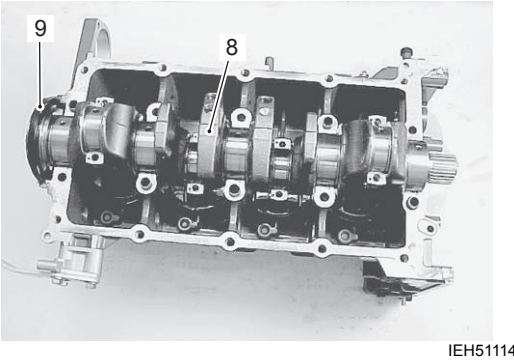

IEH511140295-03

8) Remove the bolts and piston cooling jets (10) from each cylinder.

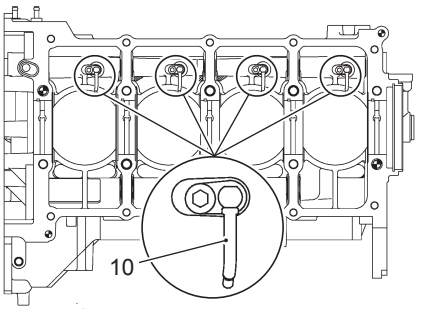

IEH511140299-03

9) Mark cylinder number on pistons using quick dry paint.
Push piston (with conrod) out through the top of cylinder bore.

NOTE

- **To prevent damage to piston rings, decarbon top of cylinder bore wall before removing piston.**
- **Reassemble each conrod cap to its original position after removing piston from bore.**

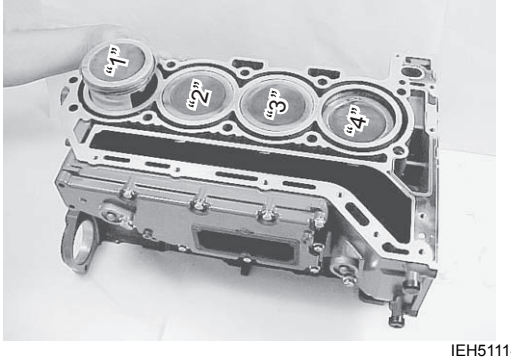

IEH511140296-03

10) Remove two compression rings (top and 2nd) and oil ring from piston.
Mark cylinder number on conrod using quick dry paint.

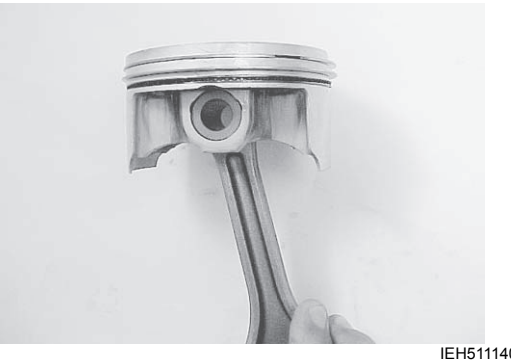

IEH511140297-03

11) Remove piston pin from piston and conrod using special tool and arbor press as shown.

NOTE

- **The piston pin is press fit into conrod small end.**
- **Reassemble each piston, piston pin and conrod in their original combination and position.**

Special tool
TOOL (A): 09910–39610 (Piston pin remover and installer)

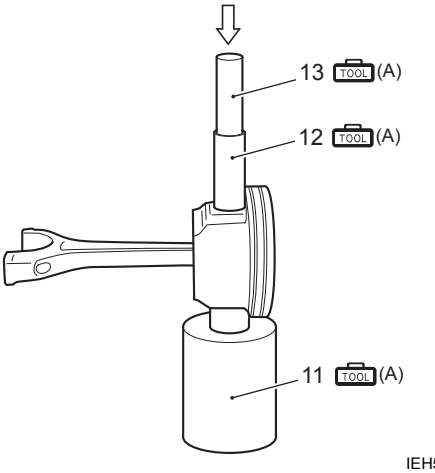

IEH511140298-05

11. Base	12. Collar	13. Drive handle

Assembly
Assembly is reverse order of disassembly paying special attention to the following steps.

NOTICE

If any of the parts is reinstalled into a position different from the original position, engine problems could occur.

If original components are not replaced, each piston, piston pin and conrod is to be assembled and installed in its original order and position.

Piston to conrod

- Apply engine oil to piston pin (1), piston pin bore and conrod (2).
  Assemble conrod (2) to piston (3) as shown in figure.

NOTE

"96L0" mark on conrod and up mark "A" on piston dome must face toward flywheel side "B".

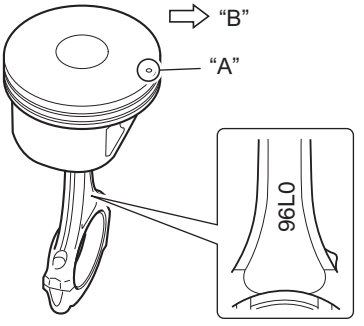

IFH511140023-01

"A": Up mark " ○ "	"B": Flywheel side

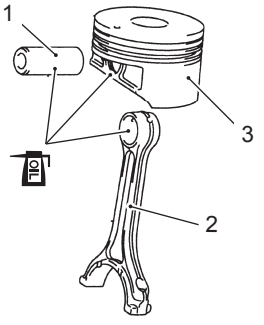

IEH511140304-03

- Use special tool and arbor press shown in figure. Press fit the piston pin (1) to conrod (with piston) until the line "C" on driver handle is flush with the flat surface of piston.

Special tool
TOOL (A): 09910–39610 (Piston pin remover and installer)

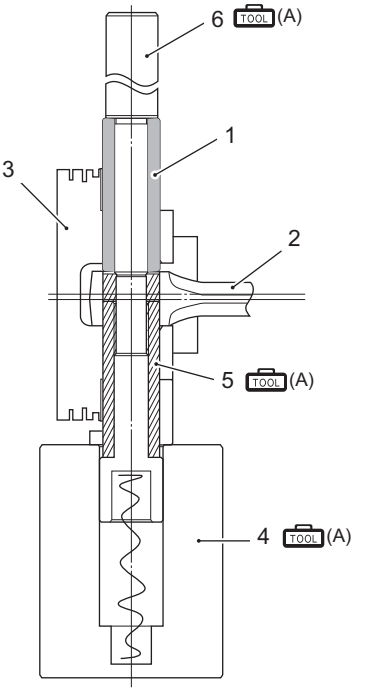

IEH511140305-03

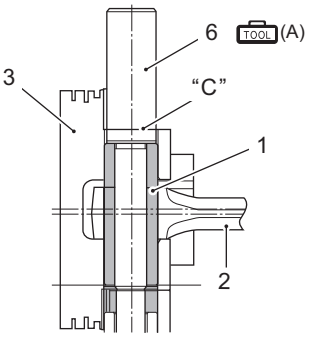

IEH511140306-03

1. Piston pin	5. Collar
2. Conrod	6. Driver handle
3. Piston	"C": Line on driver handle
4. Base	

Piston ring to piston

1) Install the oil ring.
   - Apply engine oil to piston rings.
   - Install spacer (1) first, then side rails (2) to piston.

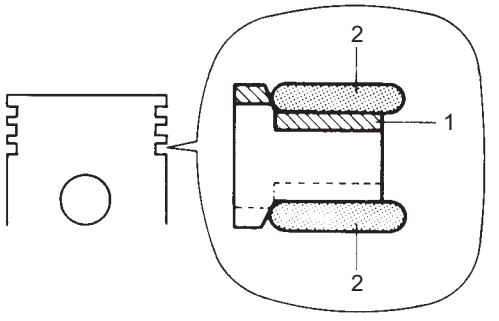

I9J011140011-01

NOTE

When installing spacer, do not allow spacer ends to overlap in groove.

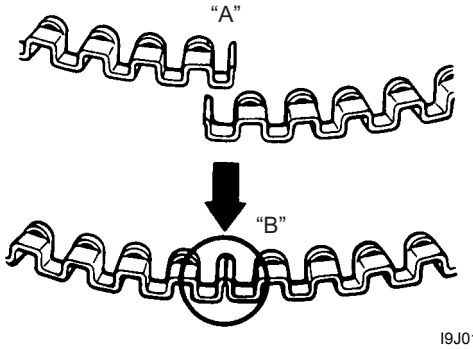

I9J011140012-01

"A": Incorrect	"B": Correct

2) Install the piston rings.
   - Apply engine oil to piston rings.
   - Install 2nd ring (3) and 1st ring (4) to piston.

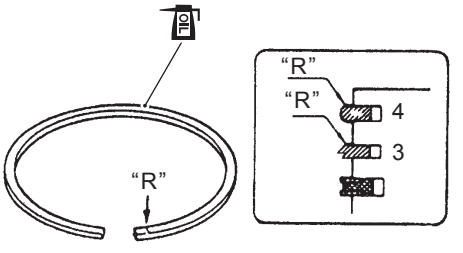

IEH511140307-04

NOTE

- **1st ring (4) and 2nd ring (3) differ in shape as shown in figure.**
- **Also indicated in figure, the 1st and 2nd ring are marked with the letter "R" which must face towards top of piston.**

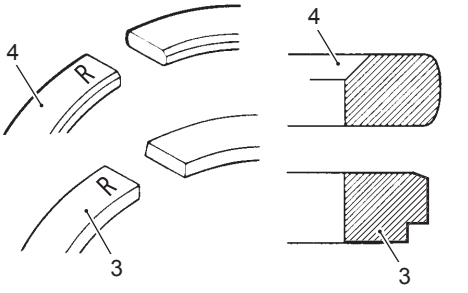

IEH511140308-03

3) Position piston rings so gaps are staggered at approximately 90 degree angles as shown.

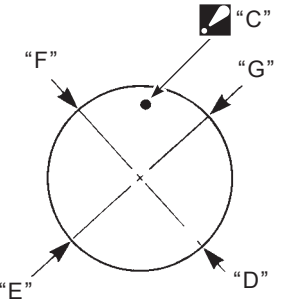

IEH511140309-03

"C": Up mark	"F": 2nd ring and oil ring spacer
"D": 1st ring	"G": Oil ring upper side rail
"E": Oil ring lower side rail	

Piston to cylinder

1) Install conrod bearing (1) to conrod (2) and conrod cap (3).

NOTICE

If the bearing is reinstalled into a position different from the original position, engine problems could occur.

If original bearings are not replaced, assemble each bearing to its original position.

NOTICE

If oil is present between the bearing's outside surface and conrod surface, the bearing could heat up to very high temperature, resulting in seizure.

Be sure to thoroughly wipe off any trace of oil that is present between the bearing's outside surface and conrod surface.

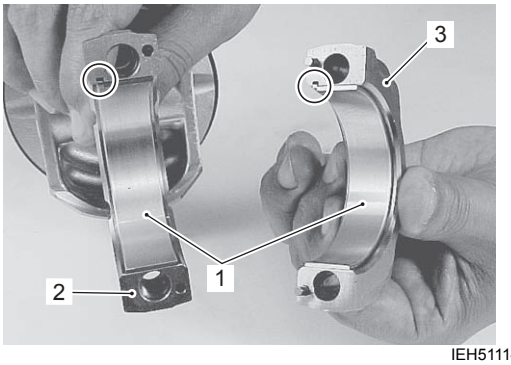

IEH511140310-03

2) Apply engine oil to piston and cylinder walls.

3) Insert piston and conrod assembly (4) into cylinder bore from cylinder head side using special tool.

NOTE

Position the up mark "A" on piston head to flywheel side "B".

Special tool
TOOL (A): 09916–77310 (Piston ring compressor)

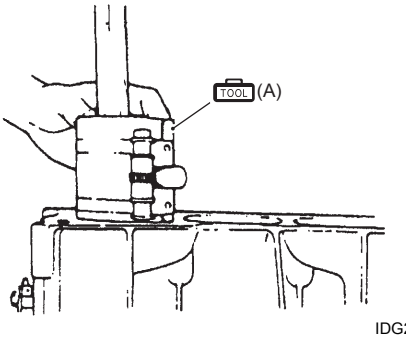

IDG211140144-01

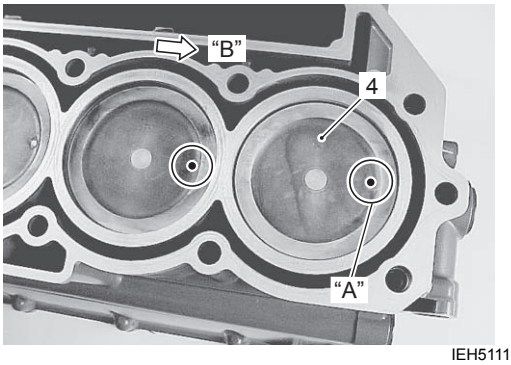

IEH511140311-02

"A": Up mark (◯)	"B": Flywheel side

Piston cooling jet

- Apply engine oil to O-ring (1).

NOTE

It is recommended that O-rings should be replaced with new ones on assembly.

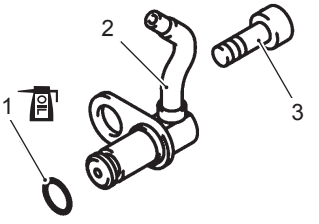

IEH511140300-03

- Install piston cooling jets (2) in position, then tighten the bolts (3) securely.

Tightening torque
Piston cooling jet bolt (a): 11 N·m (1.1 kgf-m, 8.0 lbf-ft)

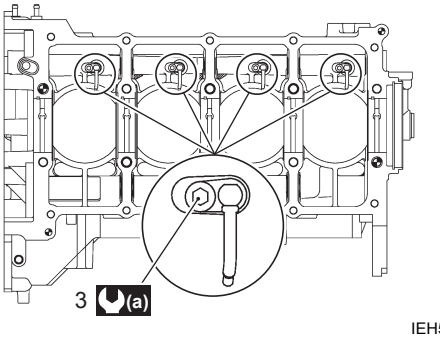

IEH511140302-04

Crankshaft to cylinder
Install crankshaft main bearings (1) in cylinder and crankcase.
Apply molybdenum oil solution to bearings.

NOTICE

If the bearing is reinstalled into a position different from the original position, engine problems could occur.

If original bearings are not replaced, assemble each bearing to its original position.

NOTICE

If oil is present between the bearing's outside surface and crank bearing holder surface, the bearing could heat up to very high temperature, resulting in seizure.

Be sure to thoroughly wipe off any trace of oil that is present between the bearing's outside surface and crank bearing holder surface.

NOTE

Assemble main bearing half containing oil groove/hole to cylinder block.
Assemble the main bearing half without oil groove to crankcase.

NOTE

Align bearing tab "A" with notch in cylinder and crankcase.

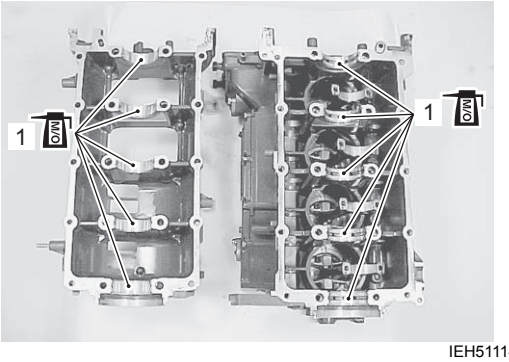

IEH511140312-03

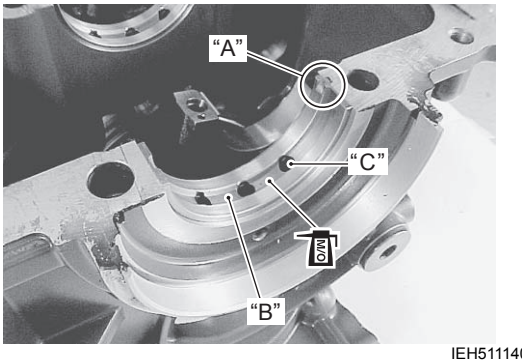

IEH511140313-04

"A": Bearing tab	"B": Oil groove	"C": Oil hole

Thrust bearing
Apply engine oil to the thrust bearings and install in cylinder block overlapping both sides of the No.4 main journal.
Oil grooves "A" on the thrust bearing must face towards crank webs.

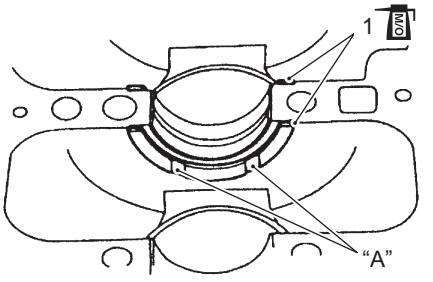

IEH511140314-01

1. Thrust bearing	"A": Oil groove

Crankshaft drive gear
To assemble the drive gear on crankshaft, align the dot (•) mark on drive gear with the dowel pin hole on crankshaft.

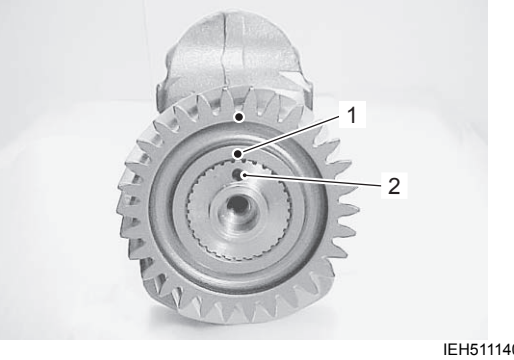

IEH511140315-03

1. Dot (•) mark	2. Dowel pin hole

Crankshaft

NOTE

Replace the oil seal with new one.

NOTE

Install upper oil seal with its spring/lipped side facing inward.

1) Apply engine oil to upper oil seal lip.
   Install upper oil seal (1) to crankshaft.
2) Apply molybdenum oil solution to crank pin and crankshaft main journal and install crankshaft in cylinder.

NOTE

When installing crankshaft to cylinder, be sure to fit tab of upper oil seal in groove of cylinder.

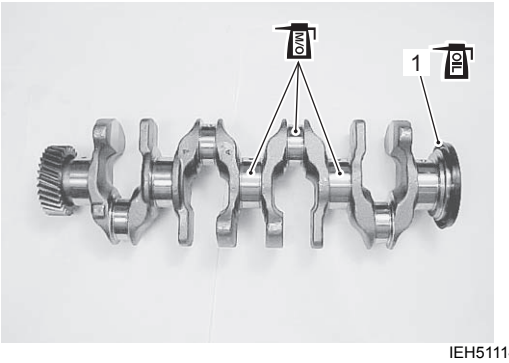

IEH511140316-03

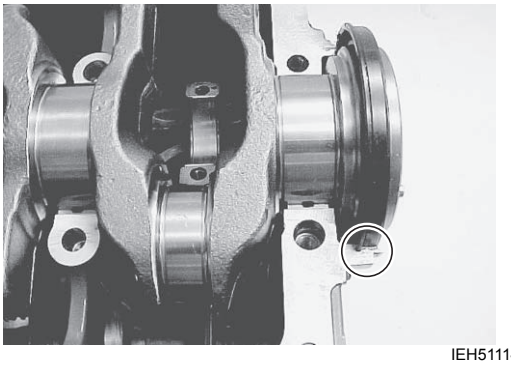

IEH511140317-03

3) Install conrod cap.
   a) Apply molybdenum oil solution to crank pin and conrod bearing.
   b) Install dowel pins (2) and conrod cap (3) (with bearing) to conrod with embossed mark “A” on the cap toward flywheel side “B”.

NOTE

Reassemble each conrod cap to its original position.
Do not mix them in position.

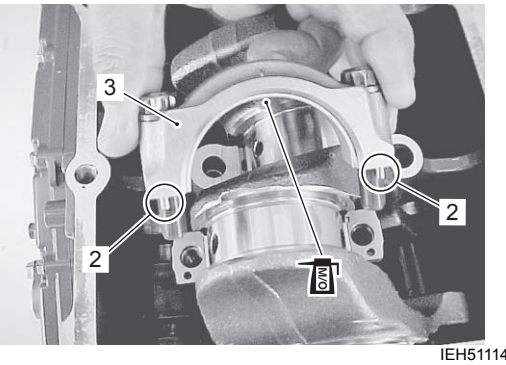

IEH511140318-03

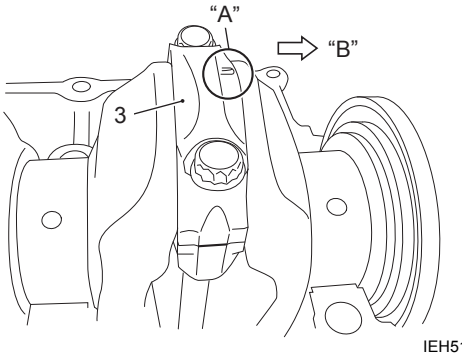

IEH511140319-05

3. Conrod cap	“A”: Embossed mark	“B”: Flywheel side

4) Apply engine oil to conrod bolts.
   Tighten conrod cap bolts in three steps as follows.
   a) Lightly seat all conrod bolts at first, then tighten bolts 15 N·m (1.5 kgf-m, 11.0 lbf-ft) of specified torque.

   Tightening torque
   Conrod cap bolt (1st step): 15 N·m (1.5 kgf-m, 11.0 lbf-ft)

b) Tighten bolts 30 N·m (3.0 kgf-m, 21.5 lbf-ft) of specified torque.

Tightening torque
Conrod cap bolt (2nd step): 30 N·m (3.0 kgf-m, 21.5 lbf-ft)

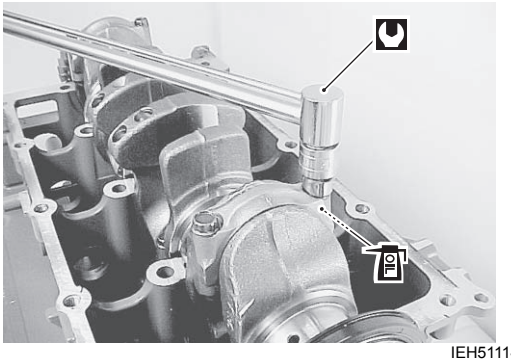

IEH511140320-01

c) Finally tighten bolts 60 degrees turn from the point of step (b) using an angular torque gauge.

Tightening torque
Conrod cap bolt (Final step): 60 degrees

NOTE

Purchase a commercially available angular torque gauge for this step of tightening bolts.

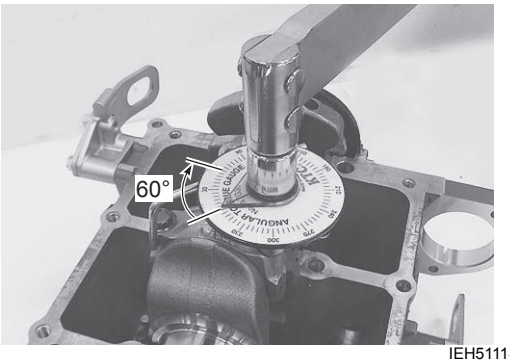

IEH511140385-04

d) Pour approx. 2 ml of engine oil to each side surface of the conrod big end for initial lubrication.

Crankcase to cylinder

1) Install the balancer gallery O-ring (1).

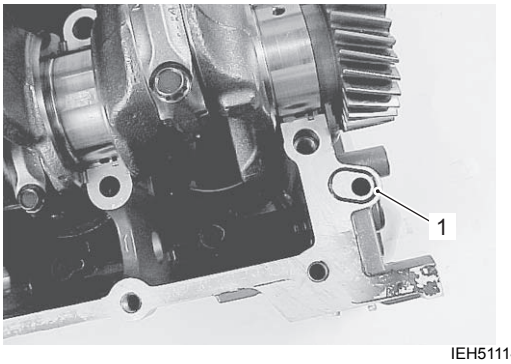

IEH511140321-03

2) Clean mating surface of cylinder and crankcase. Apply suzuki bond to mating surface of crankcase as shown.

NOTE

Apply bond to mating surface only.
Do not allow bond to contact surface of bearing.

1207B : Sealant 99000–31140 (SUZUKI Bond 1207B (100 g))

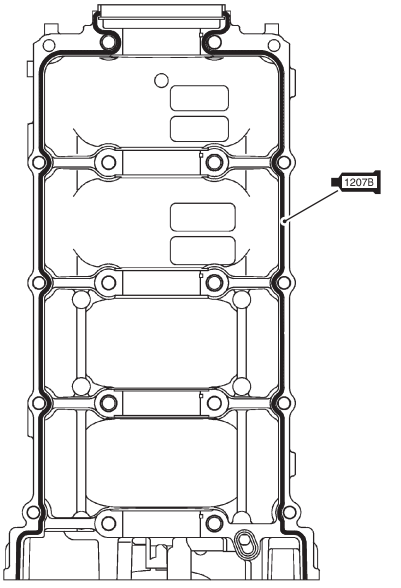

IEH511140322-03

"A": Apply bond "–" marked line.

3) Install five dowel pins (2).

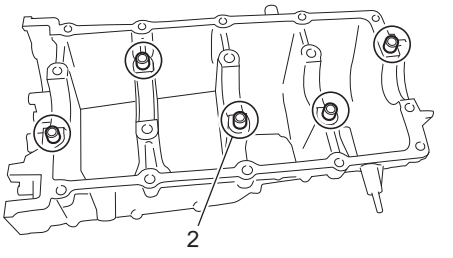

IEH511140323-03

4) Install crankcase to cylinder.
Apply engine oil to crankcase bolts.
Tighten crankcase bolts in three steps following the order indicated below.

NOTE

Tighten 11 mm (0.433 in.) thread diameter bolts first (following the order shown in figure), then tighten 10 mm (0.394 in.) thread diameter bolts.

Tightening torque
Crankcase (inside) bolt (11 mm thread diameter) [1st step]: 11 N·m (1.1 kgf-m, 8.0 lbf-ft)
Crankcase (inside) bolt (11 mm thread diameter) [2nd step]: 23 N·m (2.3 kgf-m, 16.5 lbf-ft)
Crankcase (inside) bolt (11 mm thread diameter) [Final step]: 58 N·m (5.8 kgf-m, 42.0 lbf-ft)

Tightening torque
Crankcase (outside) bolt (10 mm thread diameter) [1st step]: 10 N·m (1.0 kgf-m, 7.0 lbf-ft)
Crankcase (outside) bolt (10 mm thread diameter) [2nd step]: 18 N·m (1.8 kgf-m, 13.0 lbf-ft)
Crankcase (outside) bolt (10 mm thread diameter) [Final step]: 37 N·m (3.7 kgf-m, 27.0 lbf-ft)

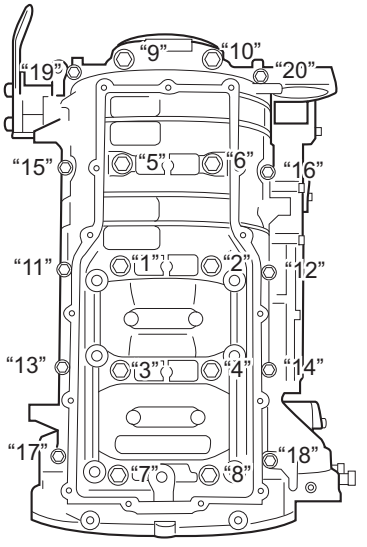

IEH511140324-03

NOTE

After tightening crankcase bolts, check to be sure that crankshaft rotates smoothly when turned by hand.

Oil filter stand

- Install seal ring (1) to oil filter stand (2).
- Install oil filter stand to cylinder block and secure with bolts (3).

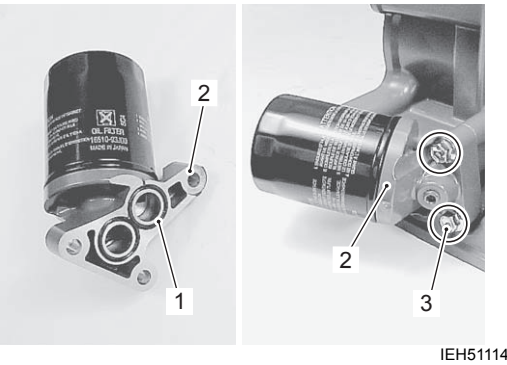

IEH511140325-03

Counter balancer mechanism
Refer to "Counter-Balancer Mechanism Removal and Installation" (Page 1D-52).

Cylinder head
Refer to "Cylinder Head Removal and Installation" (Page 1D-43).

Timing chain / Balancer chain
Refer to "Timing Chain, Camshaft Sprocket, Balancer Chain Removal and Installation" (Page 1D-29).

Oil pump
Refer to "Oil Pump Removal and Installation" in Section 1E (Page 1E-4).

Power unit
Refer to "Power Unit Removal and Installation" (Page 1D-20).

Cylinder, Piston and Piston Ring Inspection and Servicing

CENFH5111406030

NOTE

If cracks, excessive wear or other damage is found on any component, replace component.

Cylinder Distortion

Using a straightedge and thickness gauge, measure cylinder distortion (gasket surface) at a total of six locations as shown.
If measurement exceeds service limit, resurface or replace cylinder.

Special tool
(A): 09900–20803 (Thickness gauge)

Cylinder distortion
Service limit: 0.05 mm (0.002 in.)

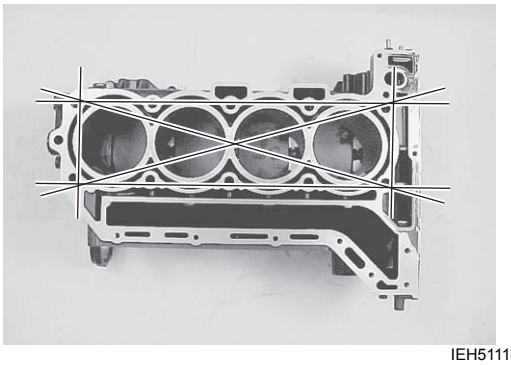

IEH511140326-03

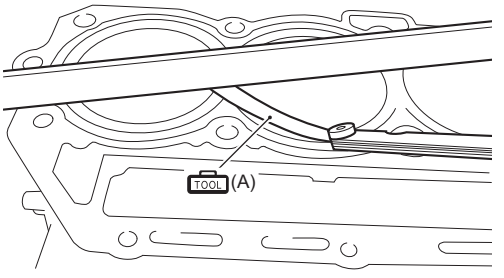

IEH511140327-03

Water Jackets

Check water jackets.
If clogged or obstruction is found, clean water jacket.

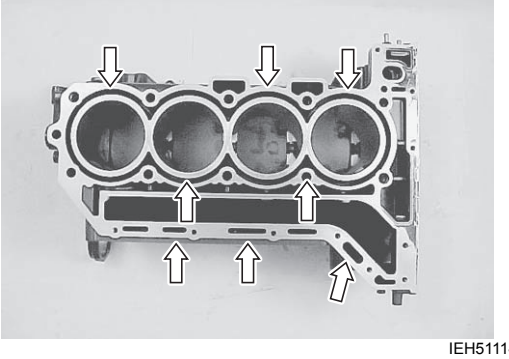

IEH511140328-03

Driven Gear / Bearing

- Inspect driven gear for wear or other damage. Replace if necessary.
- Inspect driven gear bearing for pitting, rough or other damage.
  Replace if necessary.

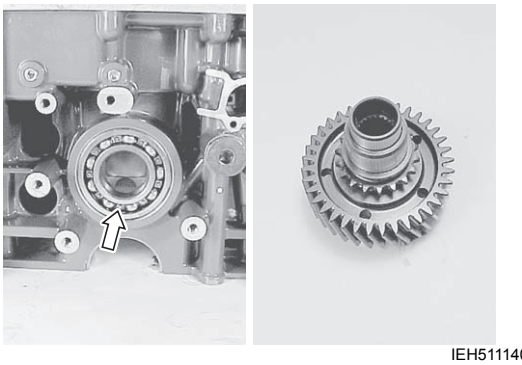

IEH511140329-03

Piston Cooling Jet

Inspect piston cooling jets.
Refer to “Piston Cooling Jet Inspection” in Section 1E (Page 1E-9).

Cylinder Bore

Inspect cylinder walls for scratches, roughness, or ridges which indicate excessive wear.
If cylinder bore is very rough, deeply scratched or ridged, bore cylinder and use oversize piston.

Cylinder Bore Wear (Difference)

Using telescoping gauge (1), measure cylinder bore in both axial (vertical line, following crankshaft) and transverse (horizontal line across crankshaft) directions at two positions as shown in figure.

NOTE

Purchase a commercially available telescoping gauge for this measurement.

Check the following:

- Difference between measurements at the two positions (Taper).
- Difference between axial and transverse measurement (Out-of-round).

If measurement exceeds service limit, bore or replace cylinder.

Cylinder bore wear (difference)
Service limit: 0.10 mm (0.0039 in.)

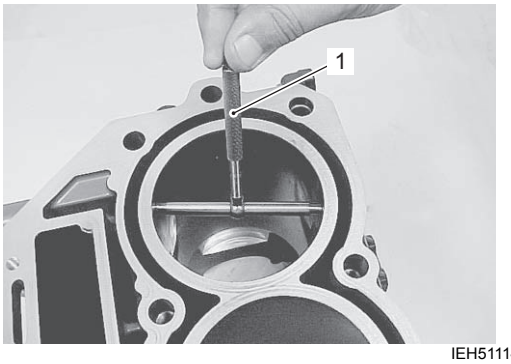

IEH511140330-03

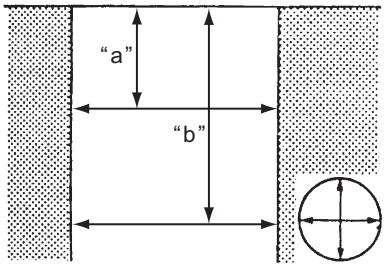

I9J011140060-01

"a": 50 mm (1.97 in.)	"b": 90 mm (3.54 in.)

Piston to Cylinder Clearance

1) Measure the piston diameter at a point 12 mm (0.47 in.) above the piston skirt at a right angle to the piston pin bore.

Special tool
TOOL (A): 09900–20204 (Micrometer (75 – 100 mm))

Piston skirt diameter
Standard: 96.945 – 96.965 mm (3.8167 – 3.8175 in.)

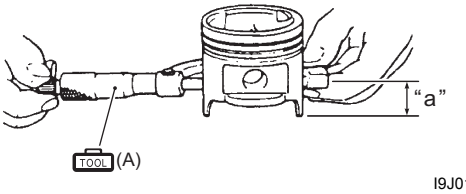

I9J011140061-02

"a": 12 mm (0.47 in.)

2) Measure the cylinder bore at 50 mm (2.0 in.) below the cylinder head gasket surface at a right angle to the crankshaft pin.

NOTE

Purchase a commercially available telescoping gauge (1) for this measurement.

Cylinder bore diameter
Standard: 97.000 – 97.020 mm (3.8189 – 3.8197 in.)

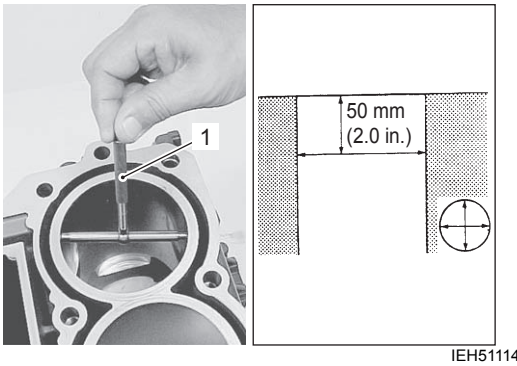

IEH511140331-04

3) Calculate the piston/cylinder clearance (Clearance equals difference between piston diameter and cylinder bore measurements).
If clearance exceeds service limit, replace piston and/or cylinder or bore cylinder.

Piston to cylinder clearance
Standard: 0.045 – 0.065 mm (0.0018 – 0.0026 in.)
Service limit: 0.100 mm (0.0039 in.)

Identification of Oversize Piston / Piston Ring
One oversize piston/piston ring components, 0.50 mm is available. Oversize piston/piston ring are marked as shown, below.

Piston

Oversize	I.D. mark
0.50 mm	50

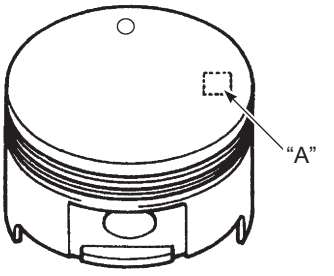

I9J011140062-02

"A": I.D. mark

1st and 2nd Piston ring

Oversize	I.D. mark
0.50 mm	50

1st, 2nd ring

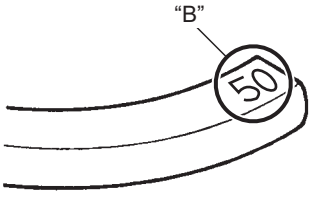

I9J011140063-03

"B": I.D. mark

Oil ring

Oversize	I.D. mark
0.50 mm	One red paint

Oil ring spacer

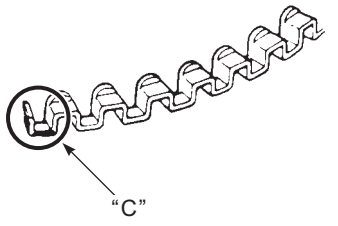

I9J011140064-02

"C": I.D. mark

Piston

Visual inspection

Inspect piston for faults, cracks or other damage.
Damaged or faulty piston(s) should be replaced.

Piston ring to groove clearance

Before checking, piston grooves must be clean, dry and free of carbon.
Fit piston ring into piston groove, and measure clearance between ring and ring groove using thickness gauge.
If measurement exceeds service limit, replace piston and/or piston ring.

Special tool

(A): 09900–20803 (Thickness gauge)

Piston ring to groove clearance

Standard (1st): 0.030 – 0.070 mm (0.0012 – 0.0028 in.)
Standard (2nd): 0.020 – 0.060 mm (0.0008 – 0.0024 in.)
Service limit (1st): 0.12 mm (0.005 in.)
Service limit (2nd): 0.10 mm (0.004 in.)

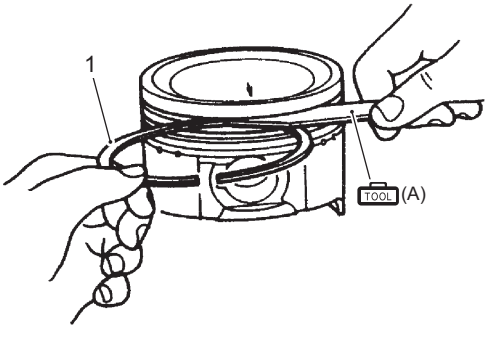

I9J011140065-03

1. Piston ring

Piston ring groove width

Standard (1st): 1.22 – 1.24 mm (0.048 – 0.049 in.)
Standard (2nd): 1.21 – 1.23 mm (0.048 – 0.048 in.)
Standard (Oil): 2.51 – 2.53 mm (0.099 – 0.100 in.)

Piston ring thickness

Standard (1st): 1.17 – 1.19 mm (0.046 – 0.047 in.)
Standard (2nd): 1.17 – 1.19 mm (0.046 – 0.047 in.)

Piston Ring

Piston ring end gap

Measure piston ring end gap with piston ring in the lowest position of cylinder bore.
If measurement exceeds service limit, replace piston ring.

Special tool

(A): 09900–20803 (Thickness gauge)

Piston ring end gap

Standard (1st): 0.20 – 0.30 mm (0.008 – 0.012 in.)
Standard (2nd): 0.30 – 0.45 mm (0.012 – 0.018 in.)
Service limit (1st): 0.70 mm (0.028 in.)
Service limit (2nd): 1.00 mm (0.039 in.)

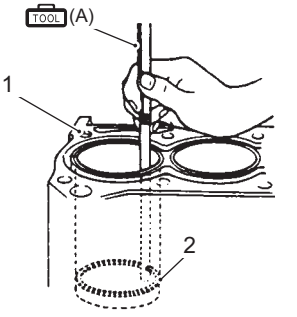

I9J011140066-02

1. Cylinder	2. Piston ring

Piston ring free end gap

Measure piston ring free end gap using vernier calipers.
If measurement exceeds service limit, replace piston ring.

Special tool

(A): 09900–20101 (Vernier calipers (150 mm))

Piston ring free end gap

Standard (1st): Approx. 13.5 mm (0.53 in.)
Standard (2nd): Approx. 13.6 mm (0.54 in.)
Service limit (1st): 10.8 mm (0.43 in.)
Service limit (2nd): 10.9 mm (0.43 in.)

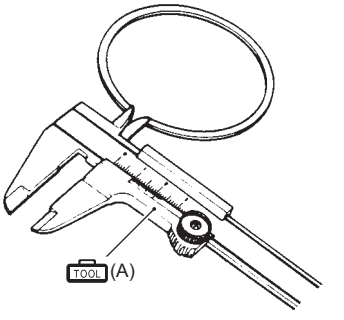

I9J011140067-02

Piston Pin and Conrod Inspection

CENFH5111406031

Piston Pin

Visual inspection

- Check piston pin, conrod small end bore and piston pin hole for wear or damage.
  If badly worn or damaged, replace component.

- Apply engine oil on piston pin so that the piston pin can move smoothly in the piston pin hole.
  If improper condition is found, replace the piston pin and/or piston.

Piston pin clearance
Measure the following item:

Special tool
(A): 09900–20205 (Micrometer (0 – 25 mm))
(B): 09900–20605 (Dial calipers (10 – 34 mm))

Piston pin outside diameter
Standard: 21.995 – 22.000 mm (0.8659 – 0.8661 in.)

Piston pin hole diameter
Standard: 22.006 – 22.014 mm (0.8664 – 0.8667 in.)

Conrod small end bore
Standard: 21.968 – 21.979 mm (0.8649 – 0.8653 in.)

NOTE

The piston pin is press-fit into the conrod small end bore.
There must be a negative clearance between the piston pin outside diameter and conrod small end inner diameter.

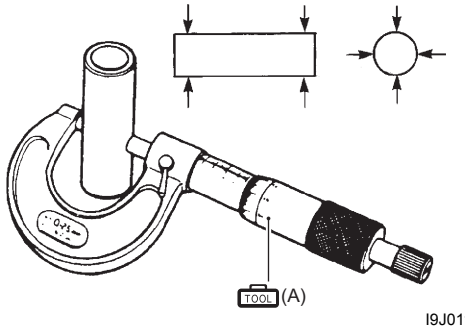

I9J011140068-02

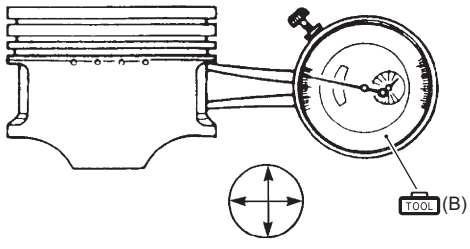

I9J011140069-02

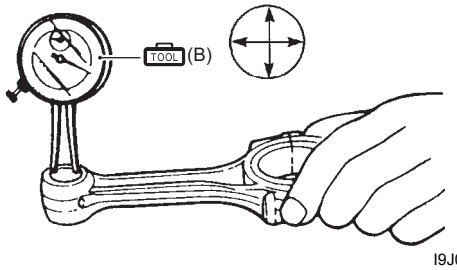

I9J011140070-02

Conrod big end side clearance
Measure conrod big end side clearance with conrod installed on crank pin as shown.
If measurement exceeds service limit, replace conrod and/or crankshaft.

Special tool
(A): 09900–20803 (Thickness gauge)

Conrod big end side clearance
Standard: 0.300 – 0.450 mm (0.0118 – 0.0177 in.)
Service limit: 0.550 mm (0.0217 in.)

Conrod big end width
Standard: 22.750 – 22.800 mm (0.8957 – 0.8976 in.)

Crank pin width
Standard: 23.100 – 23.200 mm (0.9094 – 0.9134 in.)



IEH511140332-03

Crank Pin and Conrod Bearing Inspection
CENFH5111406032

Crank Pin Diameter
Inspect crank pin for uneven wear or damage.
Measure crank pin for out-of-round “a” – “b” or taper “c” – “d” with micrometer.
If crank pin is damaged, out-of-round “a” – “b” or taper “c” – “d” is out of service limit, replace crankshaft.

Special tool
(A): 09900–20203 (Micrometer (50 – 75 mm))

Crank pin diameter
Standard: 53.982 – 54.000 mm (2.1253 – 2.1260 in.)

Out-of-round and taper
Service limit: 0.01 mm (0.0004 in.)

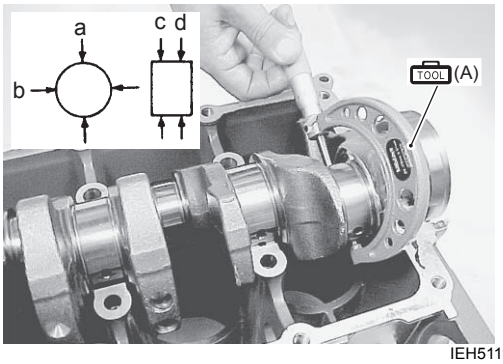

IEH511140333-05

Conrod Bearing Visual Inspection
Inspect bearing shell for proper contact pattern and signs of fusion, pitting, burning or flaking.
Bearing shells found in defective condition must be replaced.



I9J011140071-01

Conrod Big End Oil Clearance
Check conrod big end oil clearance as follows:

1) Clean surface of conrod (1), conrod cap (2), conrod bearings and crank pin.
2) Install conrod bearing (3) onto conrod and conrod cap.

NOTE

- **Reassemble each bearing and conrod cap to their original position.**
- **Do not apply oil to bearing.**

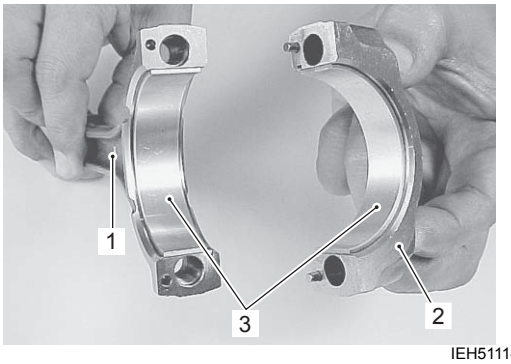

IEH511140334-03

3) Place a piece of Plastigauge on crank pin parallel to crankshaft. Avoid placing Plastigauge over oil hole.

Special tool
TOOL (A): 09900–22301 (Plastigauge (0.025 – 0.076 mm))

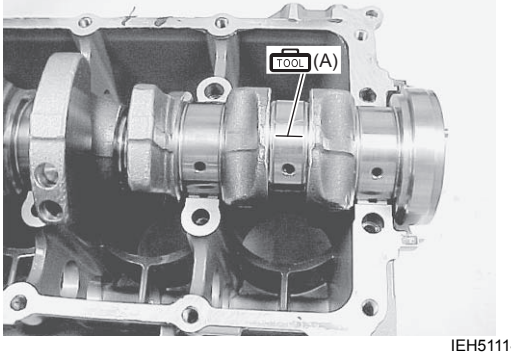

IEH511140335-03

4) Install conrod cap (with bearing) to conrod with the embossed mark (4) on cap toward flywheel side.

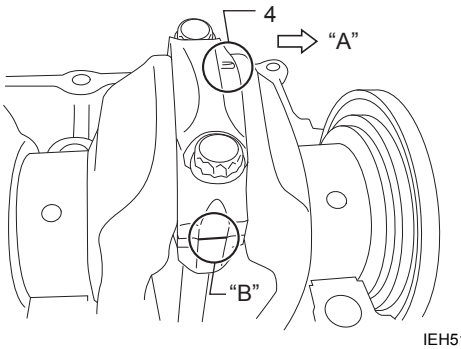

IEH511140336-05

4. Embossed mark	"A": Flywheel side	"B": Match mark

5) Apply engine oil to conrod bolts.
Tighten conrod cap bolts in three steps as follows.
a) Lightly seat all conrod bolts at first, then tighten bolts 15 N·m (1.5 kgf-m, 11.0 lbf-ft) of specified torque.

Tightening torque
Conrod cap bolt (1st step): 15 N·m (1.5 kgf-m, 11.0 lbf-ft)

b) Tighten bolts 30 N·m (3.0 kgf-m, 21.5 lbf-ft) of specified torque.

Tightening torque
Conrod cap bolt (2nd step) (a): 30 N·m (3.0 kgf-m, 21.5 lbf-ft)

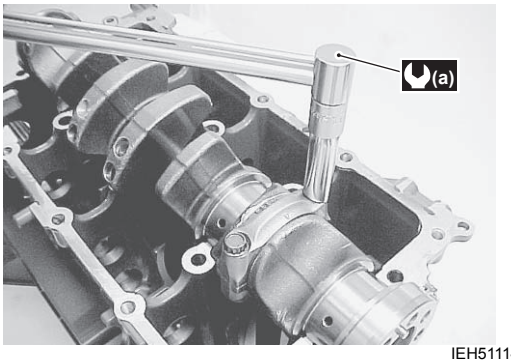

IEH511140337-03

c) Finally tighten bolts 60 degrees turn from the point of step b) using an angular torque gauge.

Tightening torque
Conrod cap bolt (Final step): 60 degrees

NOTE

Do not rotate conrod with Plastigauge in place.

NOTE

Purchase a commercially available angular torque gauge for this step of tightening bolts.

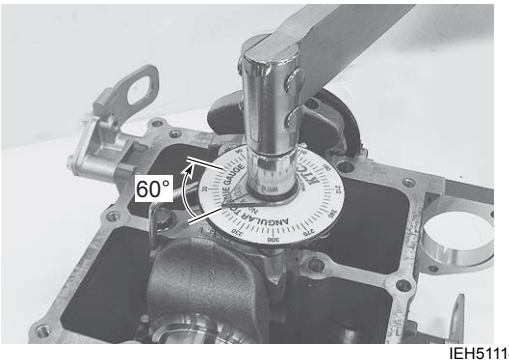

IEH511140386-04

6) Remove conrod and conrod cap from crank pin.
7) Using scale (5) on Plastigauge envelope, measure Plastigauge width at its widest point.
If measurement exceeds service limit, replace conrod bearing.

Conrod big end oil clearance
Standard: 0.045 – 0.063 mm (0.0018 – 0.0025 in.)
Service limit: 0.080 mm (0.0031 in.)

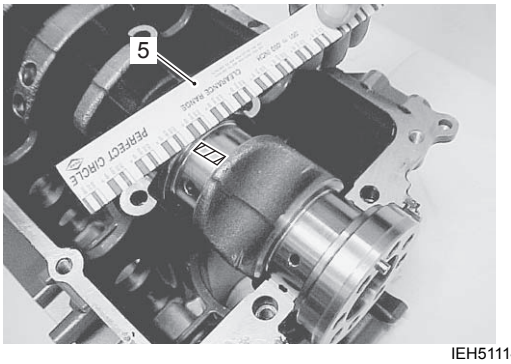

IEH511140338-03

5. Scale

Crankshaft Inspection

CENFH5111406033

Crankshaft Runout
Using a dial gauge, measure runout at center journal.
If measurement exceeds service limit, replace crankshaft.

Special tool
TOOL (A): 09900–20607 (Dial gauge)
TOOL (B): 09900–20701 (Magnetic stand)

Crankshaft runout
Service limit: 0.04 mm (0.002 in.)

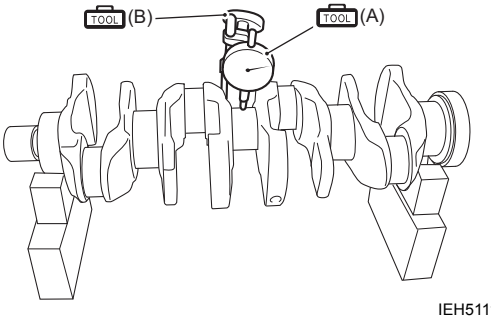

IEH511140339-03

Crankshaft Thrust Play

1) Measure thrust play with crankshaft, thrust bearing, journal bearing and crankcase/cylinder block assembled in a normal manner.
Tighten crankcase bolts to specified torque.

Tightening torque
Crankcase (inside) bolt (11 mm): 58 N·m (5.8 kgf-m, 42.0 lbf-ft)
Crankcase (outside) bolt (10 mm): 37 N·m (3.7 kgf-m, 27.0 lbf-ft)

2) Use a dial gauge to read displacement in axial (thrust) direction of crankshaft.
If measurement exceeds service limit, replace crankshaft thrust bearing.

Crankshaft thrust play
Standard: 0.11 – 0.31 mm (0.004 – 0.012 in.)
Service limit: 0.35 mm (0.014 in.)

Crankshaft thrust bearing thickness
Standard: 2.425 – 2.475 mm (0.0955 – 0.0974 in.)

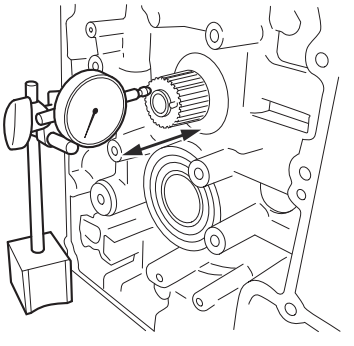

IEH511140340-03

Out-of-Round and Taper (Uneven Wear) of Journals
An unevenly worn crankshaft journal shows up as a difference in diameter at a cross section or along its length (or both).
This difference, if any, is determined by taking micrometer readings.
If any journal is badly damaged or if measurements exceed service limit, replace crankshaft.

Special tool
TOOL (A): 09900–20203 (Micrometer (50 – 75 mm))

Out-of-round and taper
Service limit: 0.01 mm (0.0004 in.)

Out-of-round: A – B
Taper: a – b

Crankshaft journal outside diameter
Standard: 64.982 – 65.000 mm (2.5583 – 2.5591 in.)

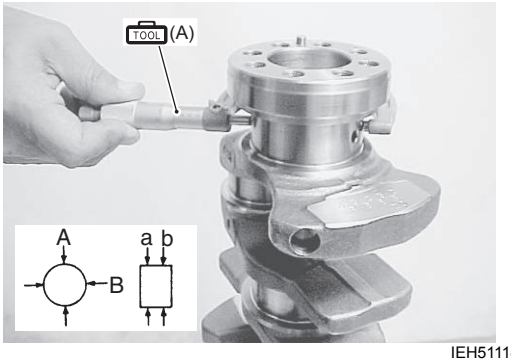

IEH511140341-03

Crankshaft Main Bearing Inspection

CENFH5111406034

Crankshaft Main Bearing Visual Inspection
Check bearings for pitting, scratches, wear or damage.
If any improper condition is found, replace both upper and lower halves.
Always replace both bearing halves, never replace only one half of a bearing set.

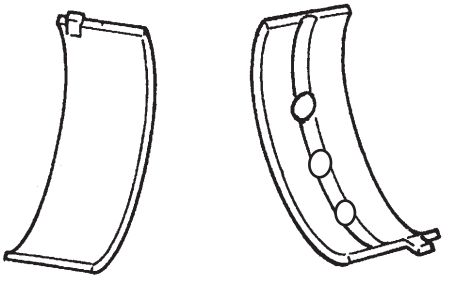
I9J011140073-01

Crankshaft Journal Oil Clearance
Check clearance using Plastigauge according to the following procedure.

NOTE

Assemble each bearing in its original position before checking clearance.

1) Clean surface of bearing holder (crankcase, and cylinder), bearing, and main bearing journal.
2) Install main bearing (1) to cylinder and crankcase.

NOTE

- **Align tab "A" of bearing with notch in cylinder and crankcase.**
- **Do not apply engine oil to bearing.**
- **Install main bearing half with oil hole/ groove towards cylinder side.**

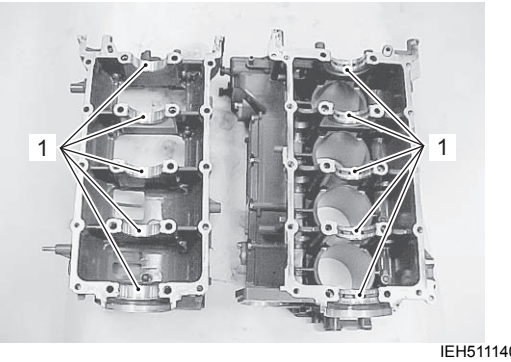

IEH511140342-03

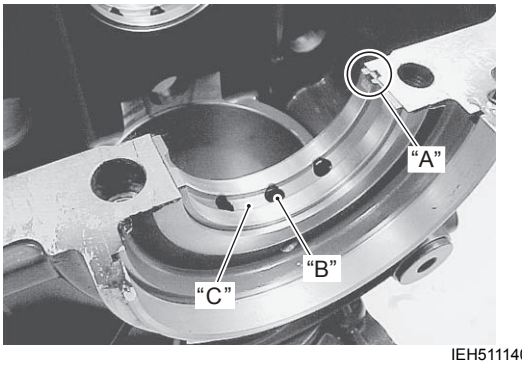

IEH511140343-03

"A": Bearing tab	"B": Oil hole	"C": Oil groove

3) Install crankshaft to cylinder.
4) Place a piece of Plastigauge across full width of bearing (parallel to crankshaft) on journal.
Do not place Plastigauge over oil hole.

Special tool
(A): 09900–22301 (Plastigauge (0.025 – 0.076 mm))

NOTE

Do not rotate crankshaft while Plastigauge is installed.

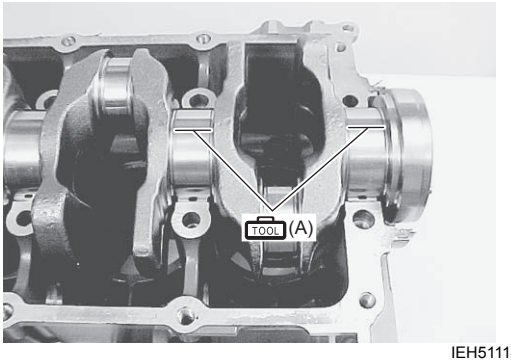

IEH511140344-03

5) Assemble crankcase to cylinder.
6) Apply engine oil to crankcase bolts.
Tighten crankcase bolts in three steps following the order indicated below.

NOTE

Tighten 11 mm (0.433 in.) thread diameter bolts first (following the order shown in figure), then tighten 10 mm (0.394 in.) thread diameter bolts.

Tightening torque
Crankcase (inside) bolt (11 mm thread diameter) [1st step]: 11 N·m (1.1 kgf-m, 8.0 lbf-ft)
Crankcase (inside) bolt (11 mm thread diameter) [2nd step]: 23 N·m (2.3 kgf-m, 16.5 lbf-ft)
Crankcase (inside) bolt (11 mm thread diameter) [Final step]: 58 N·m (5.8 kgf-m, 42.0 lbf-ft)

Tightening torque
Crankcase (outside) bolt (10 mm thread diameter) [1st step]: 10 N·m (1.0 kgf-m, 7.0 lbf-ft)
Crankcase (outside) bolt (10 mm thread diameter) [2nd step]: 18 N·m (1.8 kgf-m, 13.0 lbf-ft)
Crankcase (outside) bolt (10 mm thread diameter) [Final step]: 37 N·m (3.7 kgf-m, 27.0 lbf-ft)

NOTE

Crankcase must be torqued to specification in order to assure proper compression of Plastigauge and accurate reading of clearance.

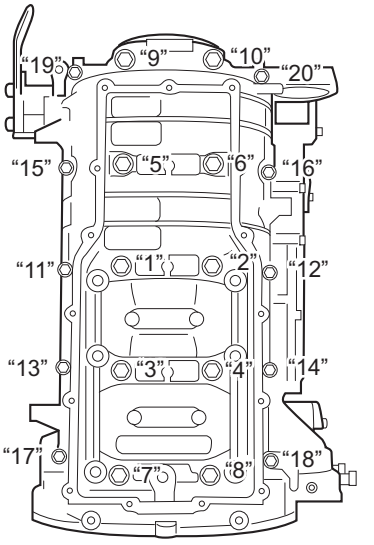

IEH511140345-03

7) Remove crankcase from cylinder.
8) Using scale (2) on Plastigauge envelope, measure Plastigauge width at its widest point.

Crankshaft journal oil clearance
Standard: 0.030 – 0.050 mm (0.0012 – 0.0020 in.)
Service limit: 0.065 mm (0.0026 in.)

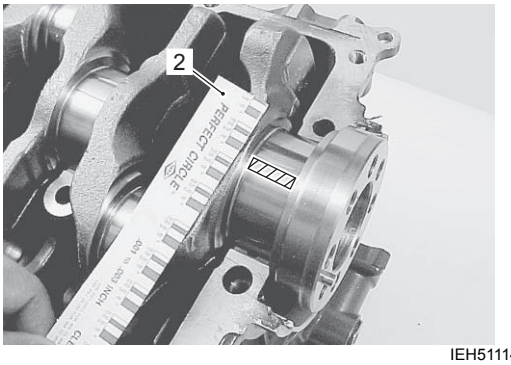

IEH511140346-03

2. Scale

9) If measurement exceeds service limit, replace crankshaft main bearing.

NOTE

For bearing replacement, see the "Selection of Main Bearings" (Page 1D-74).

Selection of Main Bearings

Whenever a bearing requires replacement, select a new bearing according to following procedure.

1) First, check journal diameter.
   As shown in figure, upper (flywheel side) crank web of No.1 cylinder has five stamped code numerals. The numerals (1, 2 and 3) represent the journal diameters shown below.

Numeral stamped	Journal diameter
1	64.994 – 65.000 mm (2.5588 – 2.5591 in.)
2	64.988 – 64.994 mm (2.5586 – 2.5588 in.)
3	64.982 – 64.988 mm (2.5583 – 2.5586 in.)

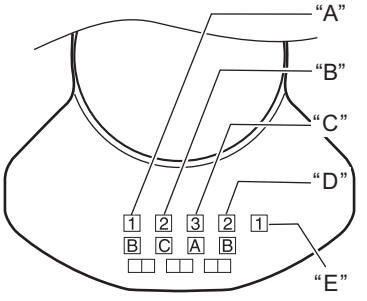

IEH511140347-03

"A": No.1 journal code	"D": No.4 journal code
"B": No.2 journal code	"E": No.5 journal code
"C": No.3 journal code	

2) Next, check bearing holder inside diameter without bearing.
   As shown in figure, the cylinder block PORT side has five stamped code letters.
   The letters (A, B and C) represent the bearing holder inside diameters shown below.

Code	Crank bearing holder inside diameter (w/o bearing)
A	70.0000 – 70.006 mm (2.7559 – 2.7561 in.)
B	70.006 – 70.012 mm (2.7561 – 2.7564 in.)
C	70.012 – 70.018 mm (2.7564 – 2.7566 in.)

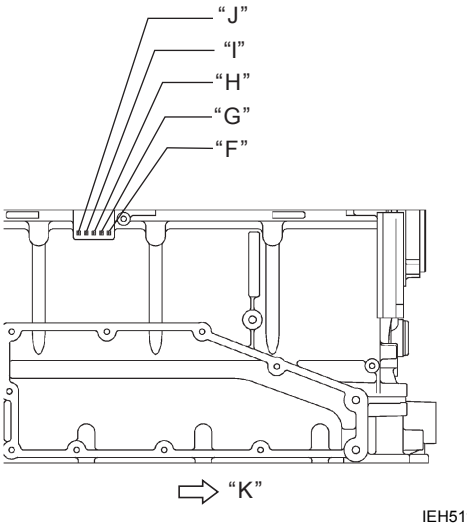

IEH511140348-04

"F": No.1 holder code	"I": No.4 holder code
"G": No.2 holder code	"J": No.5 holder code
"H": No.3 holder code	"K": Flywheel side

3) There are five main bearings available, each of differing thickness.
   To distinguish them, a color mark is painted at the position indicated in figure.
   Each color represents the following thickness measured at the center of the bearing.

Color mark	Bearing thickness
Black	2.497 – 2.500 mm (0.0983 – 0.0984 in.)
No color mark	2.499 – 2.503 mm (0.0984 – 0.0985 in.)
Yellow	2.502 – 2.506 mm (0.0985 – 0.0987 in.)
Blue	2.505 – 2.509 mm (0.0986 – 0.0988 in.)
Pink	2.508 – 2.512 mm (0.0987 – 0.0989 in.)

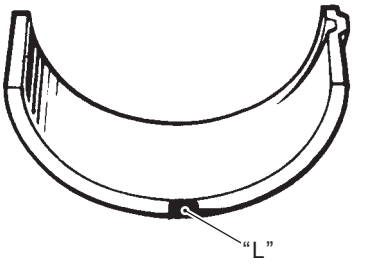

IEH511140349-03

"L": Color mark

4) Select crankshaft main bearing referring to the below table.
For example, If number stamped on crank web is “1” and alphabet stamped on cylinder block is “A”, install a new bearing painted in “Black” to it’s journal.

		Numeral stamped on crank web (Journal outside diameter)		
		1	2	3
Code stamped on cylinder block (Bearing holder inside diameter)	A	Black	No color	Yellow
	B	No color	Yellow	Blue
	C	Yellow	Blue	Pink

NOTE

Measure crankshaft journal oil clearance again after installing new bearing selected. Refer to “Crankshaft Journal Oil Clearance” (Page 1D-72).

Crankshaft Drive Gear Inspection

CENFH5111406035

Inspect drive gear. Replace gear if damaged, worn or other abnormal condition are noted.



IEH511140350-03

Crankshaft Oil Seal Inspection

CENFH5111406036

Inspect condition. If cracked, cut or damaged, replace.



IEH511140351-03

Oil Filter Stand Seal Ring Inspection

CENFH5111406037

Inspect seal ring.
Replace seal ring if worn, nicked, cut or other abnormal condition are noted.



IEH511140387-03

Power Unit Lubrication

General Description

Engine Lubrication Description

CENFH5111501001

The engine lubrication system uses a camshaft-driven trochoid oil pump that pressure feeds engine oil to the engine' moving parts. The chart below shows the lubrication system oil flow.
Engine oil is drawn up by the oil pump through the oil strainer. After passing through the oil filter, engine oil flows to the main gallery from which various passages distribute oil for lubrication and other engine functions requiring engine oil pressure to operate.

Oil from the main gallery:

- Lubricates crankshaft journal bearings #1 through #5.
- Lubricates crank pins #1 through #4.
- Sprays through four cylinder lubrication jets to lubricate the cylinder, piston, piston pin and cylinder wall.
- Lubricates counter- balancer shaft journals.
- Passes through cylinder head oil passage to lubricate IN. and EX. camshaft journals and cam faces.
- Supplies pressurized engine oil to operate the VVT system.
  Oil flows to the VVT actuator through ECM controlled OCV to advance, retard or retain the intake valve timing.

Schematic and Routing Diagram

Engine Oil Lubrication Chart

CENFH5111502001

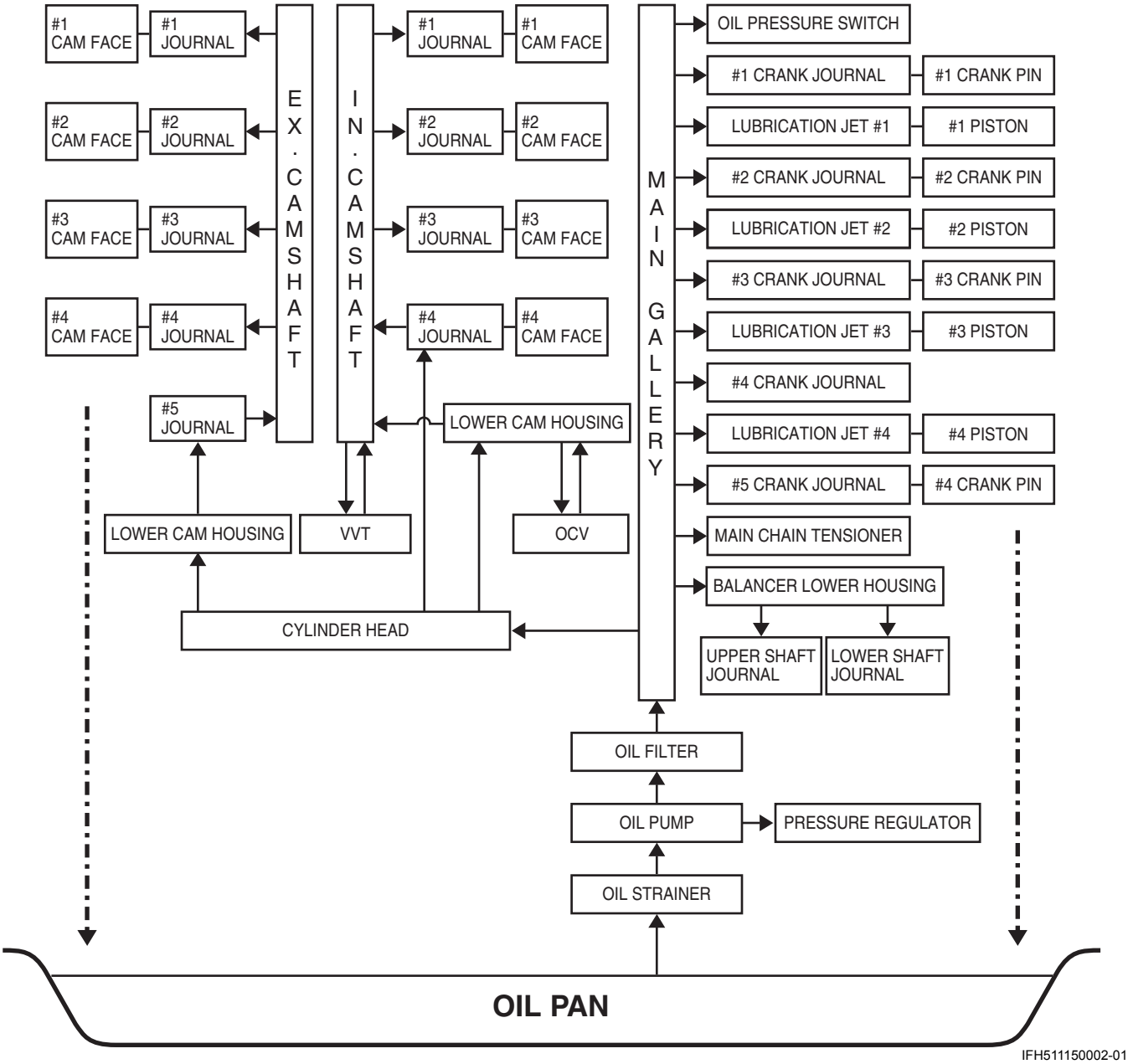

IFH511150002-01

Diagnostic Information and Procedures

Oil Pressure Check

CENFH5111504001

Refer to “Oil Pressure Check” in Section 0B (Page 0B-24).

Oil Change Reminder System

CENFH5111504002

Refer to “Oil Change Reminder System Description” in Section 1A (Page 1A-14).

Low Oil Pressure Caution System

CENFH5111504003

Refer to “Caution System Description” in Section 1A (Page 1A-6).

Powerhead Lubrication System Diagnosis

CENFH5111504005

Condition	Possible cause	Correction / Reference Item
Low oil pressure	Clogged oil filter.	*Replace.*
	Leakage from oil passages.	*Repair or replace.*
	Defective oil pump.	*Replace.*
	Defective oil pressure regulator.	*Replace.*
	Damaged O-ring.	*Replace.*
	Combination of above items.	*Repair or replace.*
High oil pressure	Using an engine oil of too high viscosity.	*Replace.*
	Clogged oil passage.	*Clean or replace.*
	Clogged oil pressure regulator.	*Replace.*
	Combination of above items.	*Repair or replace*

Service Instructions

Oil Pump Removal and Installation

CENFH5111506001

Removal

1) Remove the power unit.
   Refer to “Power Unit Removal and Installation” in Section 1D (Page 1D-20).
2) Remove the four bolts securing oil pump (1), then remove the oil pump.
   Note position of washer (2).

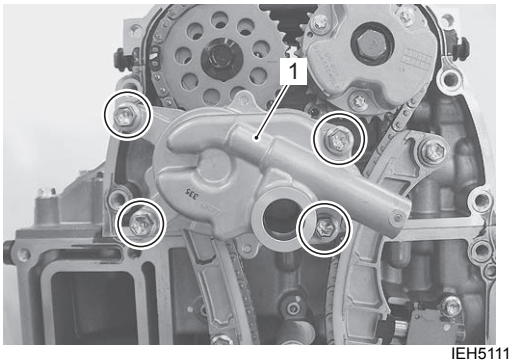

IEH511150002-02

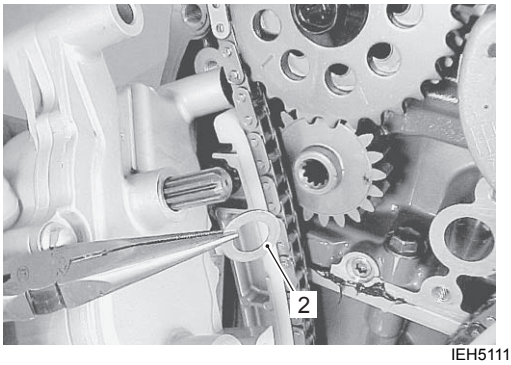

IEH511150003-01

3) Remove the oil pump driven gear (3).

NOTE

For oil pump drive gear removal, refer to “Timing Chain, Camshaft Sprocket, Balancer Chain Removal and Installation” in Section 1D (Page 1D-29).

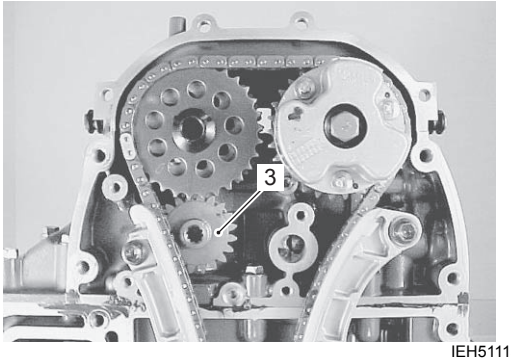

IEH511150004-01

Installation

Installation is reverse order of removal with special attention to following steps.

- Install oil pump driven gear (1).

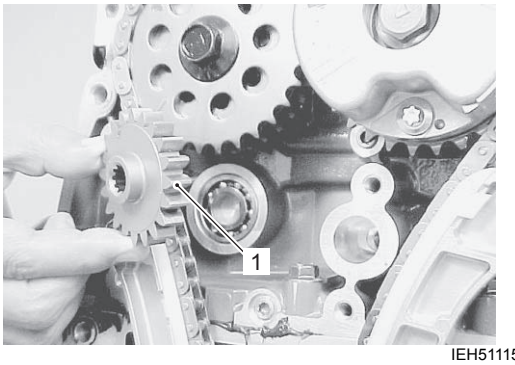

IEH511150005-01

- Install washer (2) and oil pump assembly (3), then tighten four bolts securely.

  Tightening torque
  Oil pump bolt (a): 23 N·m (2.3 kgf-m, 16.5 lbf-ft)

- Pour approx. 50 ml (1.7 oz.) of engine oil into pump case for initial lubrication.

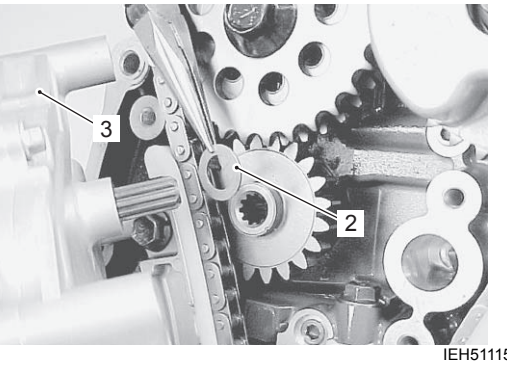

IEH511150006-01

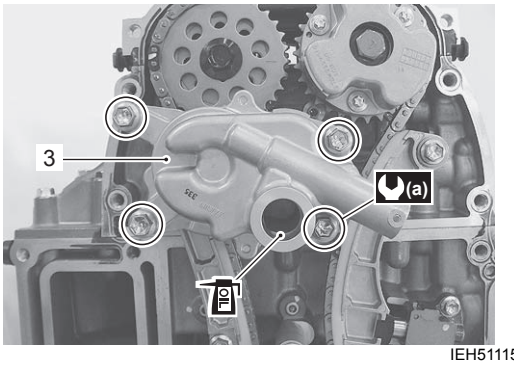

IEH511150007-02

Oil Pump Disassembly and Assembly

CENFH5111506002

Disassembly

1) Remove the two screws (1) securing oil pump rotor plate (2) to the oil pump case, then remove the oil pump rotor plate.

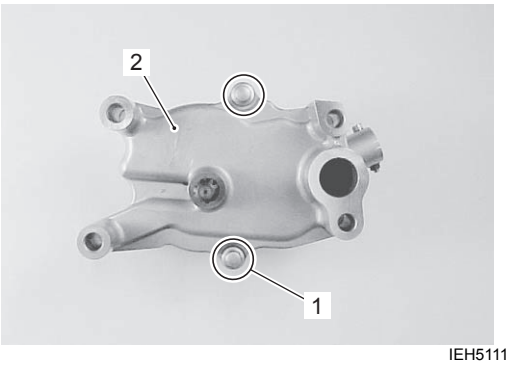

IEH511150008-01

2) Take out inner rotor (3) and outer rotor (4).

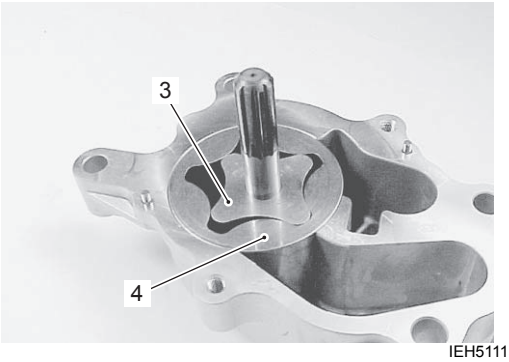

IEH511150009-01

3) Remove the pin (5) and inner rotor (3).

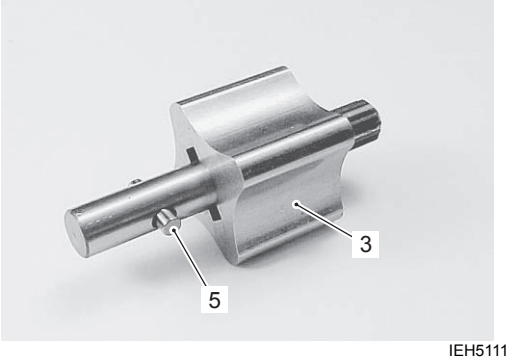

IEH511150010-01

Assembly

Assembly is reverse order of disassembly with special attention to the following steps.

- Wash, clean and then dry all disassembled parts.
- Apply thin coat of engine oil to inner and outer rotors, inside surfaces of oil pump case and plate.
- Assemble pin (1) and inner rotor (2) to oil pump shaft.

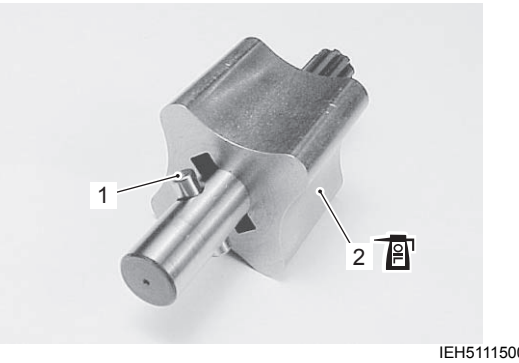

IEH511150011-01

- Install outer (3) and inner rotor (2) to pump case.

NOTE

When installing outer rotor, it must be original in direction of up and down.

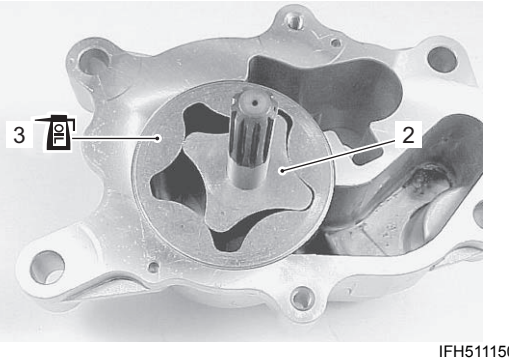

IFH511150001-01

- Install dowel pins (4) and rotor plate (5), and then tighten screws (6) securely.
  After mounting the rotor plate, make sure that each rotor turns smoothly by hand.
- Pour approx. 50 ml (1.7 oz.) of engine oil into pump case for initial lubrication.

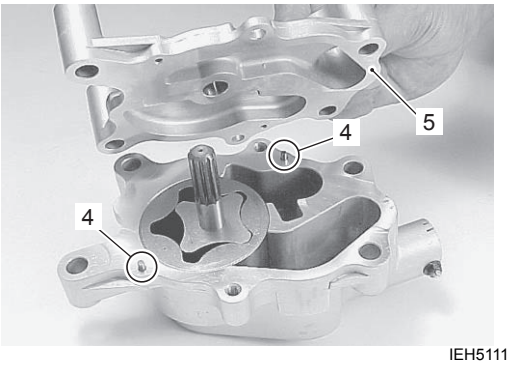

IEH511150013-01

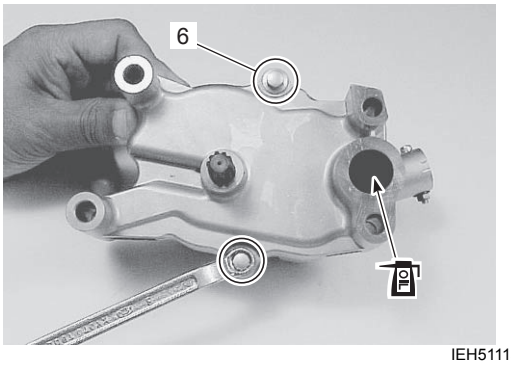

IEH511150014-01

Oil Pump Component Parts Inspection

CENFH5111506003

Oil Pump Assembly

Check outer and inner rotors, rotor plate and oil pump case for excessive wear or damage.
Replace as necessary.

NOTE

If any repair is required on outer rotor, inner rotor and oil pump case/plate, replace them as an oil pump assembly.



IEH511150015-01

Driven Gear

Check teeth of gear for wear or damage.
Replace the gear as necessary.



IEH511150016-01

Radial Clearance

Using thickness gauge, measure radial clearance between outer rotor and case.

Special tool

(A): 09900–20803 (Thickness gauge)

Radial clearance

Service limit: 0.31 mm (0.0122 in)

If measurement is not within specifications, replace the oil pump assembly.

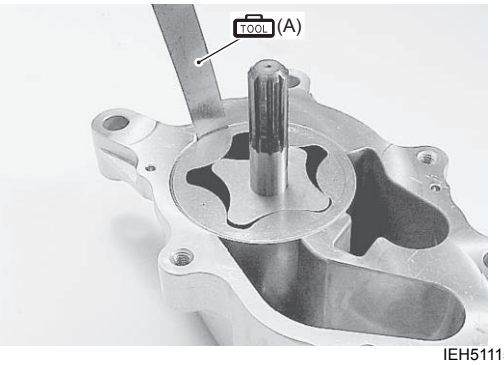

IEH511150017-01

Side Clearance
Using straightedge and thickness gauge, measure side clearance.

Special tool
TOOL (A): 09900–20803 (Thickness gauge)

Side clearance
Service limit: 0.15 mm (0.0059 in)

If measurement is not within specifications, replace the oil pump assembly.

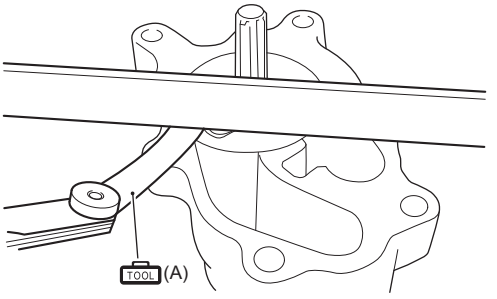

IEH511150018-01

Oil Pressure Switch Removal and Installation

CENFH5111506004

Removal

1) Remove the ring gear cover and air intake silencer case (1).
Refer to “Ring Gear Cover Removal and Installation” in Section 1D (Page 1D-2) and “Air Intake Silencer Case Removal and Installation” in Section 1D (Page 1D-2).
2) Loosen the three bolts and remove the fuel hose guard (2).

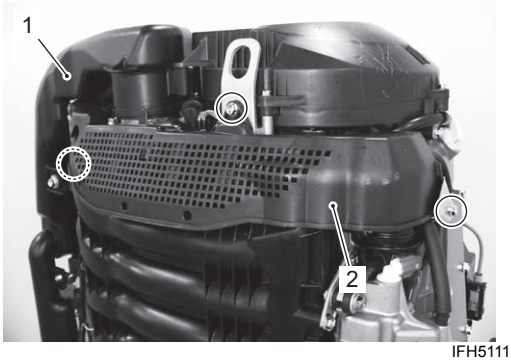

IFH511150003-02

3) Loosen screw (3) and disconnect blue lead wire (4) from oil pressure switch.

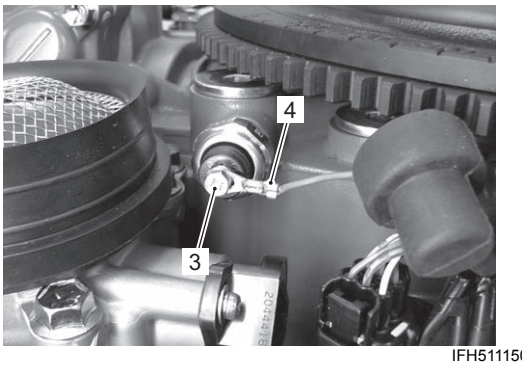

IFH511150008-01

4) Remove oil pressure switch from cylinder block.

Installation
Installation is reverse order of removal with special attention to the following steps.

- Before installing oil pressure switch, wrap screw threads with sealing tape (1), then tighten switch to specified torque.

NOTE

Cut off any excess sealing tape from switch threads before installation.

Tightening torque
Oil pressure switch (a): 13 N·m (1.3 kgf-m, 9.5 lbf-ft)

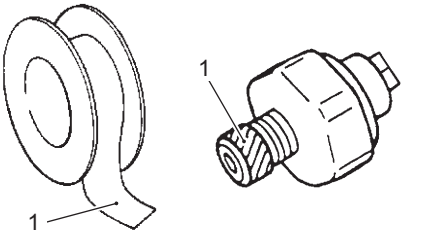

I9J011150002-01

- Connect the oil pressure switch lead wire (2).
Refer to “Wiring Harness Routing Diagram” in Section 4A (Page 4A-2).

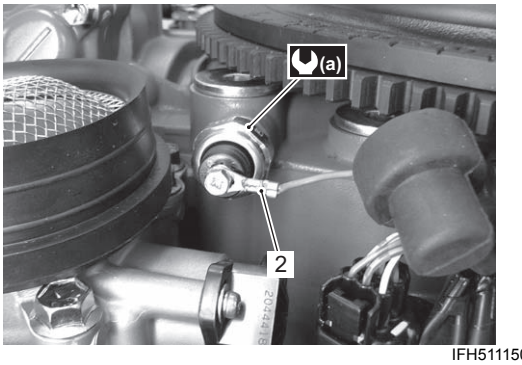

IFH511150009-01

- Start engine and check oil pressure switch for oil leakage.
  Reseal switch if oil leakage is found.
- Install the air intake silencer case and ring gear cover. Refer to “Air Intake Silencer Case Removal and Installation” in Section 1D (Page 1D-2) and “Ring Gear Cover Removal and Installation” in Section 1D (Page 1D-2).

Oil Pressure Switch Inspection

CENFH5111506005

NOTE

Before checking the oil pressure switch, make sure the engine oil pressure is within specification.

1) Loosen the three bolts and remove the fuel hose guard (1).

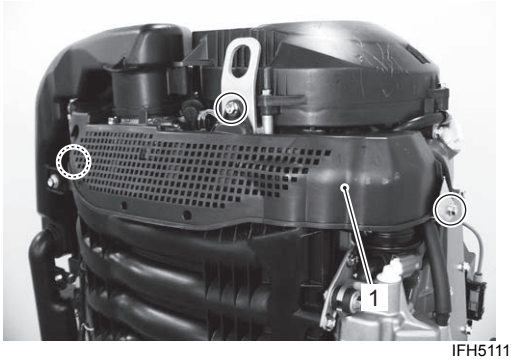

IFH511150006-01

2) Remove the blue lead wire (2) from oil pressure switch (3).

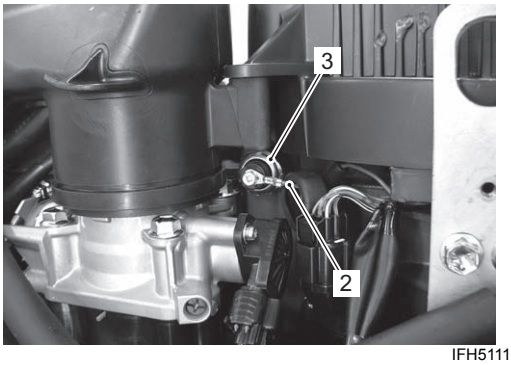

IFH511150007-01

3) Check the continuity between the switch terminal and engine body ground.

Special tool
(TOOL) : 09900–25008 (Multi circuit tester set)

Tester knob indication
Continuity (•)))

Oil pressure switch continuity
Engine running: Infinity
Engine stopped: Continuity

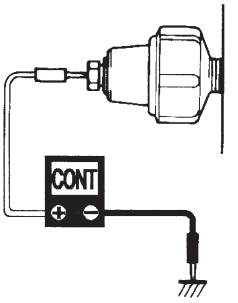

I9J011150003-01

If measurement exceeds specification, replace oil pressure switch.

4) After testing oil pressure switch, reinstall parts removed earlier.

Oil Strainer Removal and Installation

CENFH5111506006

Removal
Refer to “Engine Holder / Oil Pan / Driveshaft Housing / Mounts Disassembly” in Section 2A (Page 2A-6).

Installation
Refer to “Engine Holder / Oil Pan / Driveshaft Housing / Mounts Assembly” in Section 2A (Page 2A-10).

Oil Strainer Related Parts Inspection

CENFH5111506007

- Inspect oil strainer. Replace strainer if cracked, damaged or other abnormal conditions.
  If clog or obstruction, clean oil strainer.
- Check condition of O-rings. Replace O-ring if nicked, cut, worn or other abnormal condition.



IEH511150022-02

Piston Cooling Jet Removal and Installation

CENFH5111506008

Refer to “Pistons, Piston Rings, Connecting Rods, Cylinder and Crankshaft Disassembly and Assembly” in Section 1D (Page 1D-56).

Piston Cooling Jet Inspection

CENFH5111506009

1) Remove the piston cooling jets (1).
   Refer to “Pistons, Piston Rings, Connecting Rods, Cylinder and Crankshaft Disassembly and Assembly” in Section 1D (Page 1D-56).

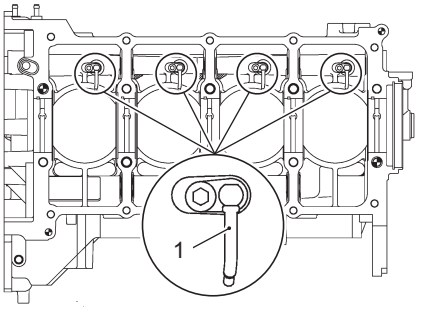

IEH511150023-01

2) Check the piston cooling jets.
   If crack or other damage is found, replace the jet.
   Clean jets thoroughly to ensure there is no obstruction.

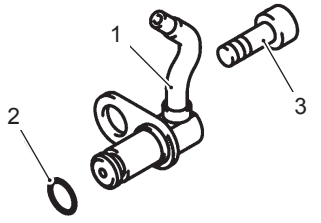

IEH511150024-01

1. Piston cooling jet	2. O-ring	3. Bolt

3) Install the piston cooling jets.
   Refer to “Pistons, Piston Rings, Connecting Rods, Cylinder and Crankshaft Disassembly and Assembly” in Section 1D (Page 1D-56).

Power Unit Cooling System

General Description

Water Cooling System Description

CENFH5111601001

The cooling system uses a displacement type flexible vane impeller to supply cooling water to the powerhead assembly.
To prevent incomplete combustion due to an overcooled engine, and to ensure proper water flow during cold engine operation, there is a thermostat in the cylinder.
Motor temperature and cooling system efficiency are monitored by cylinder temp. sensor and exhaust manifold temp. sensor in the cylinder. If temperature higher than normal is detected by a sensor, an advance caution of overheat condition is provided.

Displacement Type Water Pump Description

CENFH5111601002

In this displacement type water pump, the water pressure is increased by the change in volume between the impeller and the pump case. As a result, the increased water pressure enables the water pump to circulate the cooling water.

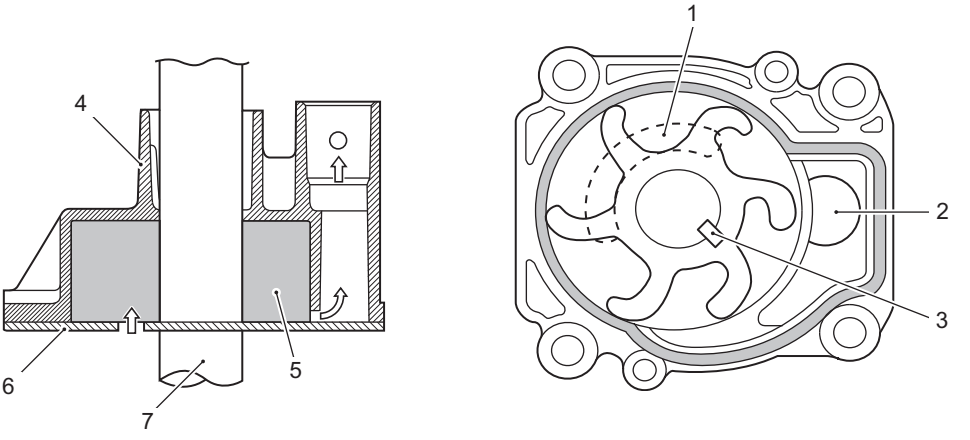

I9J011160003-01

1. Water inlet	3. Key	5. Water pump impeller	7. Driveshaft
2. Water outlet	4. Water pump case	6. Under panel	

Water Pressure Valve Description

CENFH5111601003

If cylinder water pressure is high when thermostat is closed, the valve will open to relieve the pressure.

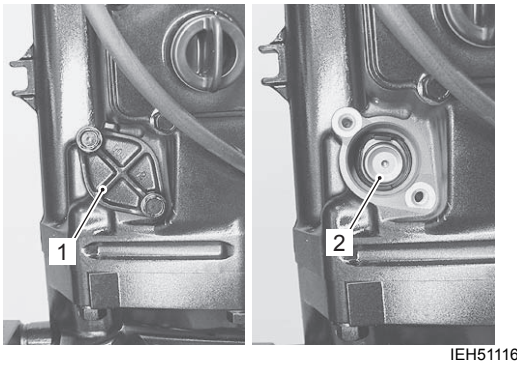

IEH511160001-02

1. Water pressure valve cover	2. Water pressure valve

Schematic and Routing Diagram

Cooling Water Circulation Chart

CENFH5111602001

The water cooling system includes the lower unit water pump, lower unit to power unit water supply tube, oil pan water pressure valve, power unit water passages and thermostat.
This system cools both the power unit and exhaust and is shown in schematic form below.
If overheating occurs, the components of the cooling system must be inspected for blockage, corrosion build-up or component damage.

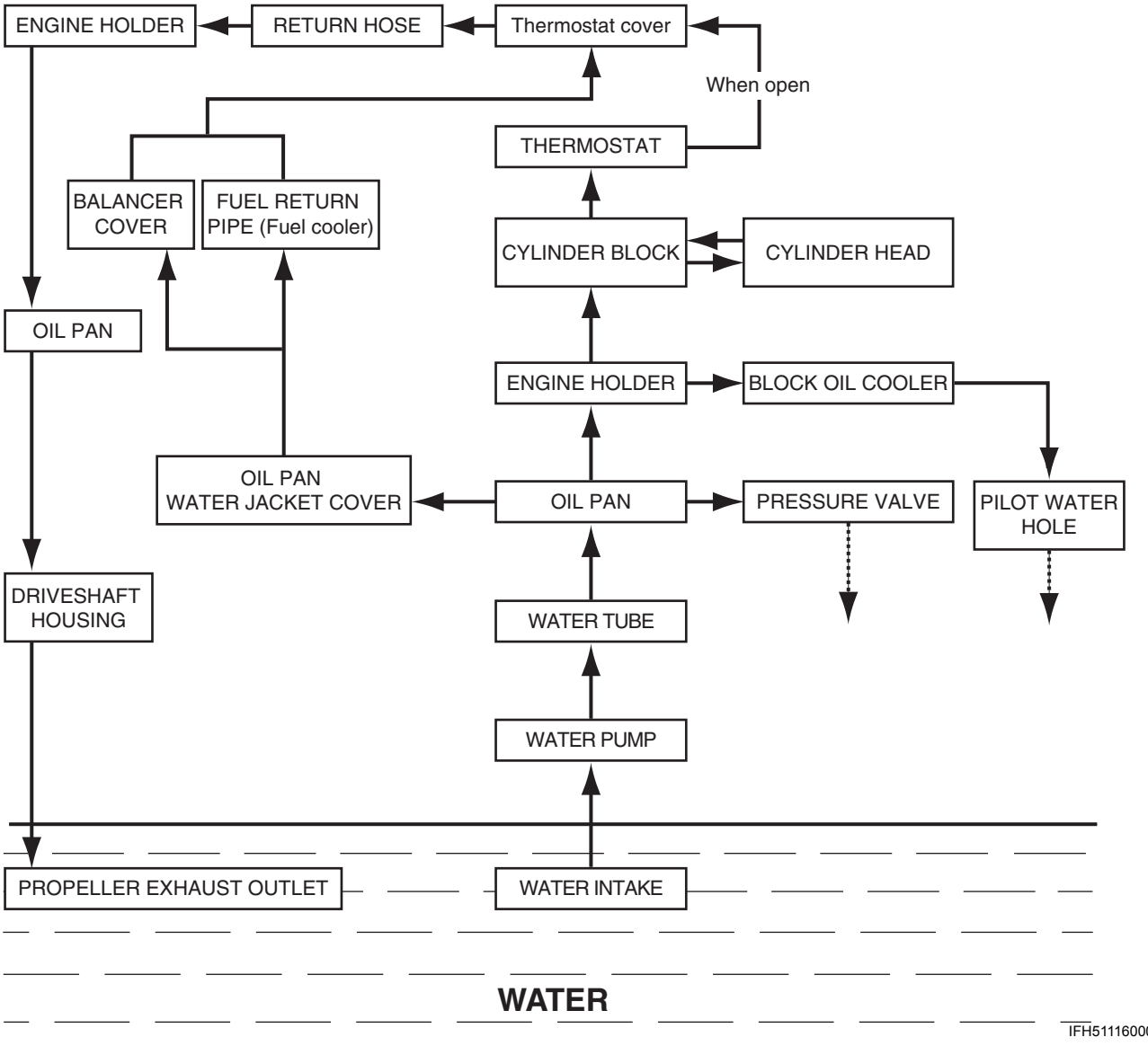

IFH511160002-02

Diagnostic Information and Procedures

Powerhead Cooling System Diagnosis

CENFH5111604001

Condition	Possible cause	Correction / Reference Item
Overheating powerhead	Water inlet screen obstructed.	*Clean.*
	Water passage obstructed.	*Clean or replace.*
	Pump plate not sealing.	*Check and repair.*
	Water pump impeller damage.	*Replace.*
	Water pump housing and/or plate worn.	*Replace.*
	Water pump housing seal worn.	*Replace.*
	Water tube grommet damaged.	*Replace.*
	Thermostat damaged/defective.	*Replace.*
	Water tube obstructed.	*Clean.*
	Water tube defective.	*Replace.*
	Water pressure valve damaged/ defective.	*Replace.*
Overcooling powerhead	Thermostat damaged/defective.	*Replace.*

Service Instructions

Thermostat Removal and Installation

CENFH5111606001

Removal

1) Remove the ring gear cover and air intake silencer case.
   Refer to “Ring Gear Cover Removal and Installation” in Section 1D (Page 1D-2) and “Air Intake Silencer Case Removal and Installation” in Section 1D (Page 1D-2).
2) Remove the flame arrester (1).

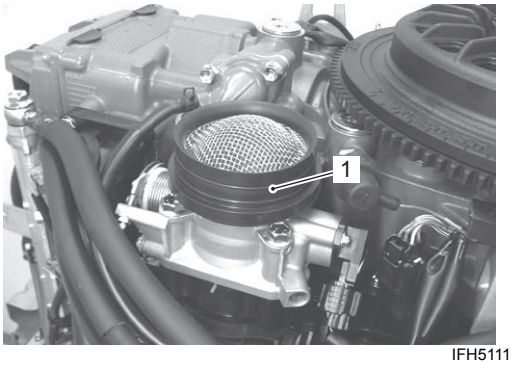

IFH511160003-03

3) Loosen the four bolts and remove the plate (2).

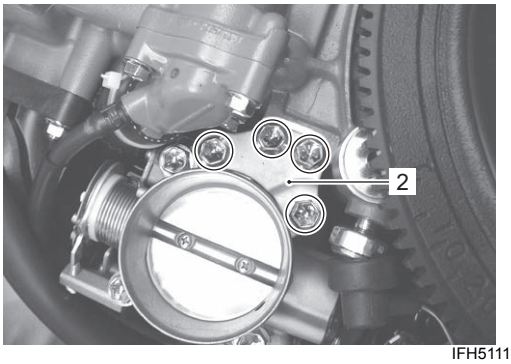

IFH511160004-03

4) Remove the three bolts (3) securing the thermostat cover (4), then remove the cover (4) and thermostat (5).

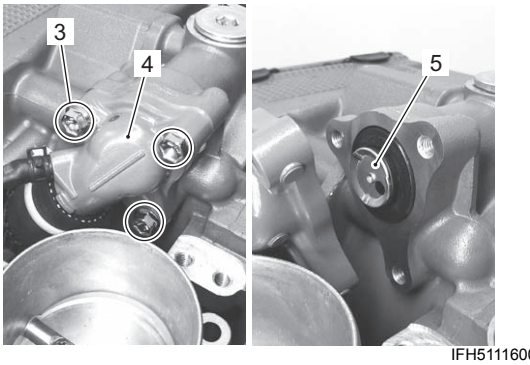

IFH511160005-02

Installation

Installation is reverse order of removal with special attention to the following steps.

- Assemble thermostat (1) and thermostat cover (2) to cylinder block and secure with bolts (3).

  Tightening torque
  Thermostat cover bolt (a): 11 N·m (1.1 kgf-m, 8.0 lbf-ft)

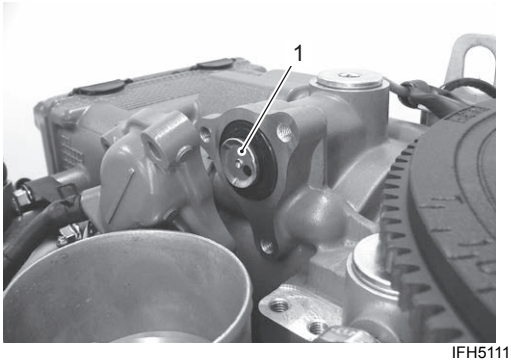

IFH511160006-03

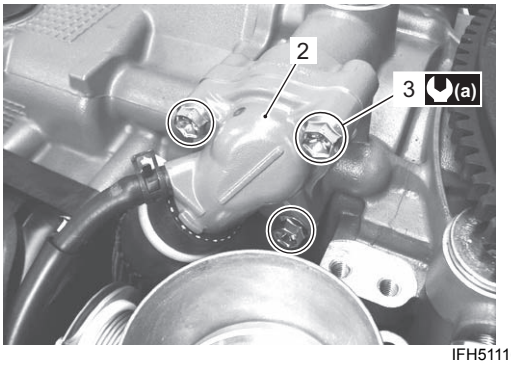

IFH511160007-03

- Check to ensure that all removed parts are back in place.

Thermostat Inspection

CENFH5111606002

Inspect the thermostat in the following procedures:

1) Remove the thermostat.
   Refer to “Thermostat Removal and Installation” (Page 1F-3).
2) Inspect the thermostat.
   If salt deposits, corrosion, wear or other damage is found, clean or replace.



IEH511160007-01

3) Check thermostat opening temperature as follows:
   a) Insert a length of thread between thermostat valve/body and suspend thermostat in a container filled with water.
   b) Place thermometer in container and heat water. Observe water temperature when thermostat valve opens and releases thread.

      Thermostat operating temperature
      Standard: 48 – 52 °C (118 – 125 °F)

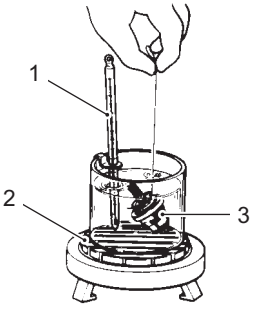

I9J011160002-01

1. Thermometer	2. Heater	3. Thermostat

   If thermostat valve does not open as specified above, or sticks in any position, replace it.
4) Install the thermostat.
   Refer to “Thermostat Removal and Installation” (Page 1F-3).

Water Pressure Valve Removal and Installation

CENFH5111606003

Removal

1) Remove the lower covers and oil pan covers. Refer to “Lower Side Cover Removal and Installation” in Section 2A (Page 2A-3).
2) Remove two bolts, water pressure valve cover (1) and water pressure valve (2).

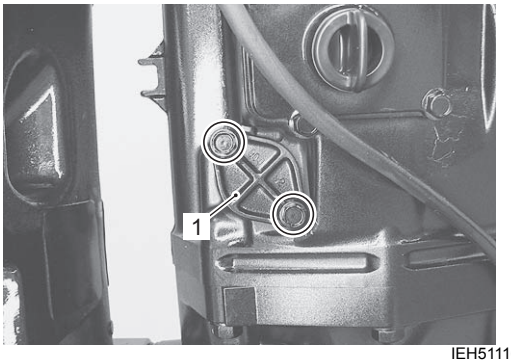

IEH511160008-02

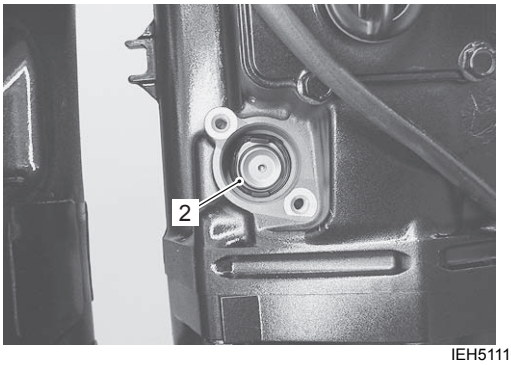

IEH511160009-02

Installation

1) Install O-ring (1) to water pressure valve cover (2).

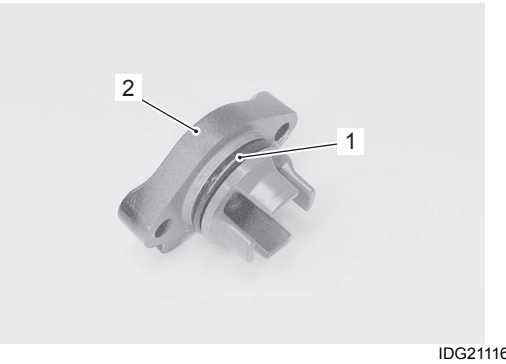

IDG211160009-01

NOTE

Align projections “A” on valve’s seal rubber with cutaway parts “B” on valve cover when installing.

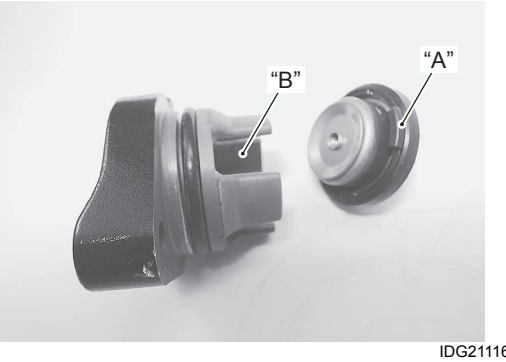

IDG211160011-01

2) Install water pressure valve (3) and water pressure valve cover (2) to oil pan and secure with bolts (4).

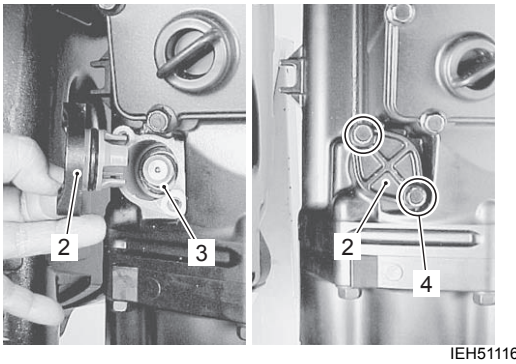

IEH511160010-01

3) Install oil pan covers and lower side covers. Refer to “Lower Side Cover Removal and Installation” in Section 2A (Page 2A-3).

Water Pressure Valve Related Item Inspection

CENFH5111606004

Inspect the water pressure valve in the following procedures:

1) Remove the water pressure valve.
   Refer to “Water Pressure Valve Removal and Installation” (Page 1F-5).
2) Inspect the water pressure valve.
   If salt deposits, corrosion, wear or other damage is found, clean or replace.
   Inspect O-ring. Replace if nicked, cut or torn.

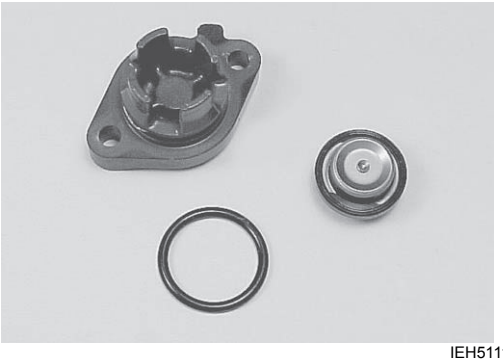

IEH511160011-01

3) Install the water pressure valve.
   Refer to “Water Pressure Valve Removal and Installation” (Page 1F-5).

Water Pump Removal and Installation

CENFH5111606005

Refer to “Water Pump Removal and Installation” in Section 3A (Page 3A-7).

Water Pump Related Item Inspection

CENFH5111606006

Refer to “Water Pump and Related Item Inspection” in Section 3A (Page 3A-9).

Water Tube Removal and Installation

CENFH5111606007

Removal

Refer to “Engine Holder / Oil Pan / Driveshaft Housing / Mounts Disassembly” in Section 2A (Page 2A-6).

Installation

Refer to “Engine Holder / Oil Pan / Driveshaft Housing / Mounts Assembly” in Section 2A (Page 2A-10).

Water Tube Related Item Inspection

CENFH5111606008

Refer to “Engine Holder / Oil Pan / Driveshaft Housing / Mounts Related Component Inspection” in Section 2A (Page 2A-14).

Fuel System

Precautions

Precautions on Fuel System Service

CENFH5111700001

⚠ WARNING

Service operation of any type performed on the fuel system involves a risk of fire and injury if proper precautions are not taken.

Be sure to take the following precautions when working around gasoline or servicing the fuel system.

- **Disconnect battery cables except when battery power is required for servicing/inspection.**
- **Keep the working area well ventilated and away from open flame (such as gas heater) or sparks.**
- **Do not smoke or allow anyone else to smoke near the working areas.**
  Post a "NO SMOKING" sign.
- **Keep a fully charged CO2 fire extinguisher readily available for use.**
- **Always use appropriate safety equipment and wear safety glasses when working around a pressurized fuel system.**
- **To avoid potential fire hazards, do not allow fuel to spill on hot engine parts or on operating electrical components.**
- **Wipe up fuel spills immediately.**
- **Before loosening or disconnecting the fuel feed line, be sure to relieve the fuel system of fuel pressure by following the fuel pressure relief procedure.**
- **When disconnecting a fitting on the fuel line, cover the fitting with a shop cloth to soak up the small amount of fuel that may flow out from the disconnected fuel line. Put the used cloth in an approved container.**
- **Since fuel hose connections vary with the pipe type, connect and clamp each hose using the correct method for each specific connection.**
  After connecting a hose, check that there is no twist or kink in the hose.
- **When installing hose clamps, position tabs to avoid contact with other parts.**
- **Be sure hoses do not contact rods, levers or other components with engine either operating or at rest.**

General Description

Electronic Fuel Injection System Description

CENFH5111701001

The fuel injection system used by the DF200A is a speed-density, multi-point, sequential, electronic fuel injection type. The fuel injection system is composed of the fuel line components, air intake components, and components for system control (ECM, sensors, switches, etc.).

Fuel Injection Control System Outline

Sensors are mounted at precise locations on the motor to monitor the current conditions of engine operation and send signals to the ECM.
Based on these signals, the ECM determines the optimum fuel injection time duration (fuel amount), fuel injection timing (multi-point sequential timing) and controls the injector operating signals accordingly.
In regards to fuel injection timing, the fuel injection end timing is set depending on engine rpm. The ECM calculates the amount of fuel injection based on the engines operating conditions, and determines the fuel injection start timing. In the injection timing chart below, the injection end timing is set at 100° ATDC on the compression stroke.

Basic sensors

MAP sensor: Informs ECM of intake manifold pressure.
CKP sensor: Informs ECM of engine speed and crankshaft angle.

Compensating sensors

Cylinder temperature sensor: Informs ECM of cylinder temperature.
Exhaust manifold temperature sensor: Informs ECM of exhaust manifold temperature.
IAT sensor: Informs ECM of intake air temperature.
TPS (Throttle position sensor): Informs ECM of throttle opening angle.
MAP sensor: Informs ECM of barometric pressure at time of engine start.
O2 sensor: Informs ECM of oxygen concentration in exhaust gas.
Battery voltage: Constantly monitored by the ECM.

Others

CMP sensor: Informs ECM of camshaft angle.
Shift position sensor: Informs ECM of shift position (neutral or in-gear).

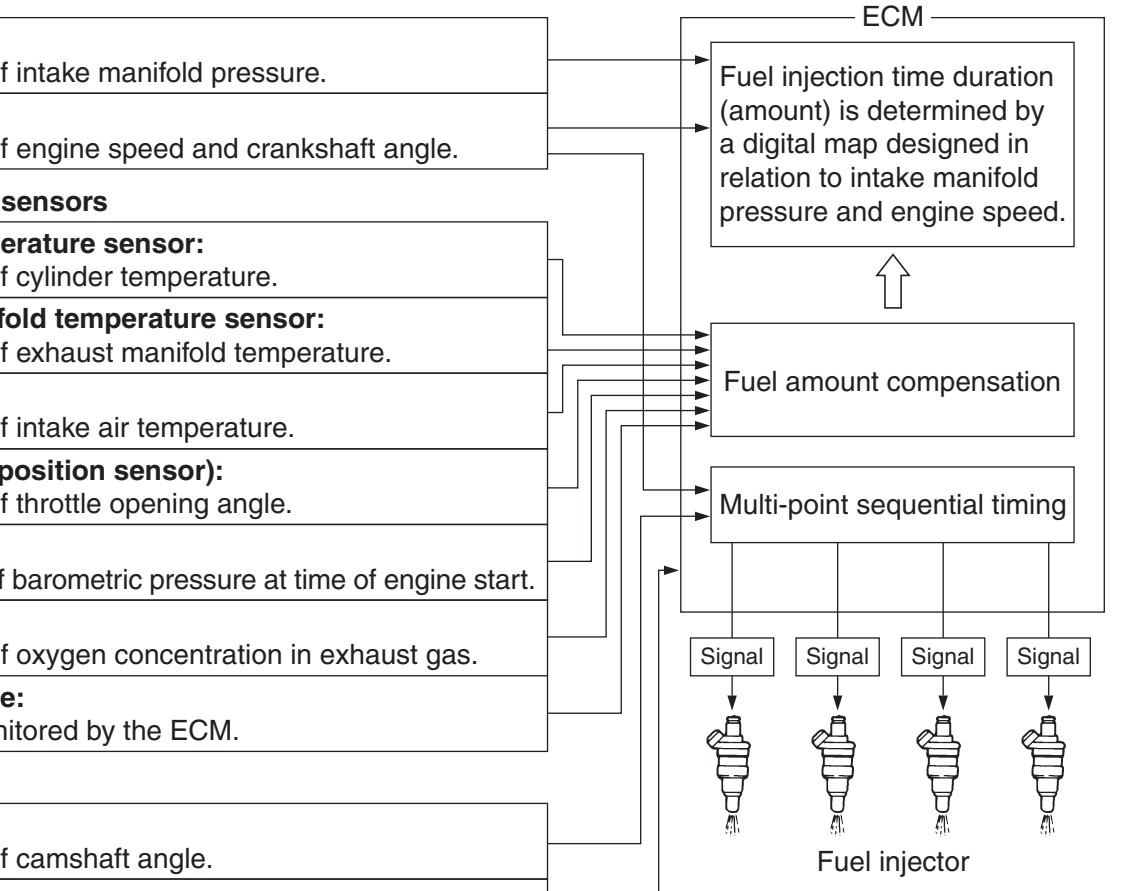

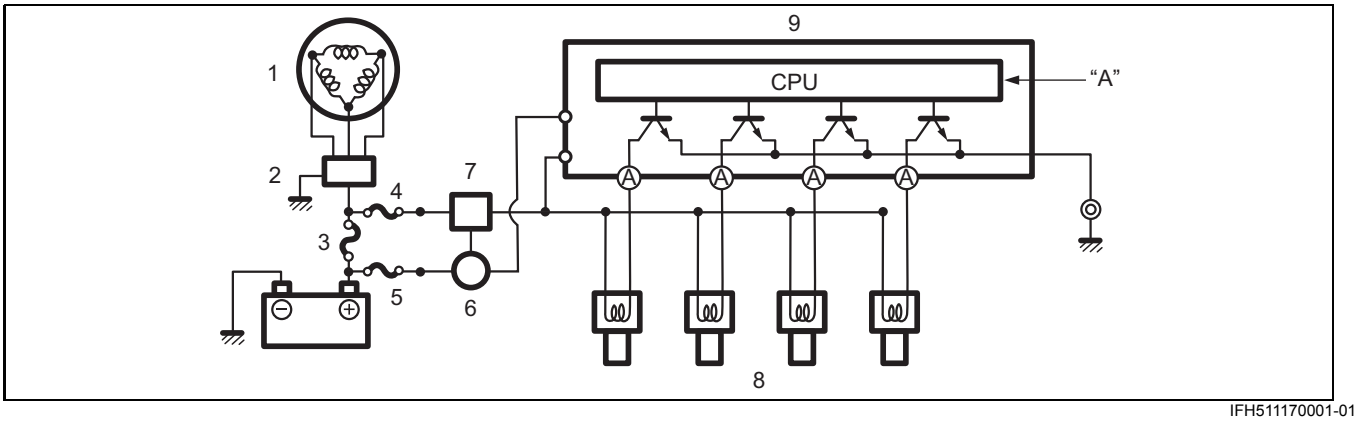

IFH511170001-01

1. Battery charge coil	4. 30 A fuse	7. ECM main relay	"A": Sensor/switch signal input
2. Rectifier/regulator	5. 15 A fuse	8. Fuel injector	
3. 60 A fuse	6. Ignition switch	9. ECM	

Fuel Injection Timing Chart

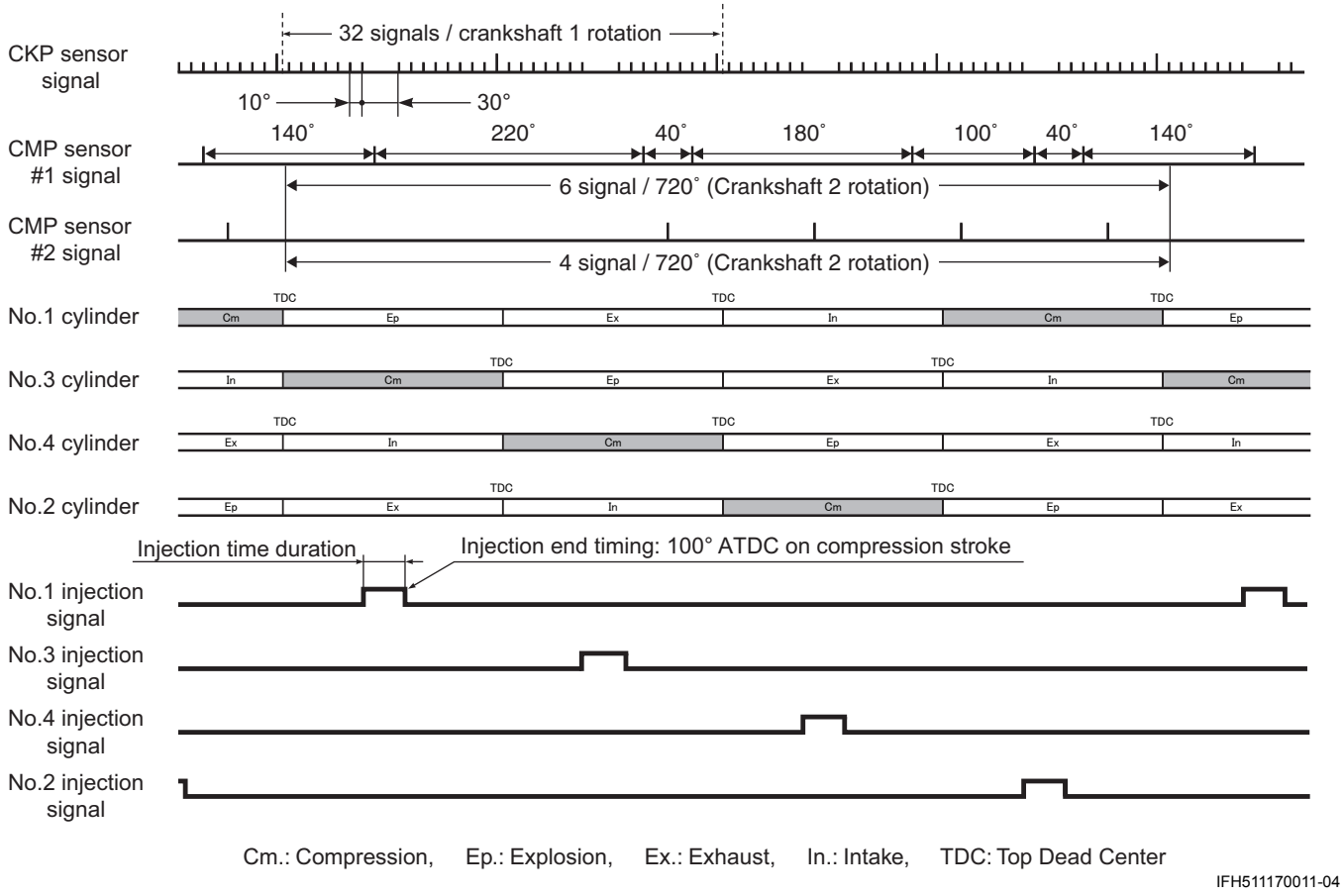

IFH511170011-04

Fuel Injection Control Mode

Before start:

When the ignition switch is turned “ON”, the ECM receives a MAP sensor signal, indicating the static barometric pressure of the intake manifold. This signal is used to compensate the fuel injection map.

When cranking:

Fuel is injected in each cylinders according to the “Start up mode” map which is based on the cylinder temperature and intake air temperature (Sequential injection).

After start (Fast-idle function):

The fuel injection amount is controlled so that the engine rpm stays within the fast idle speed map until the cylinder temperature reaches normal operating temperature.

When idling / trolling:

The fuel injection amount is controlled to maintain a stable engine speed at the specified idle/trolling rpm.

When running (normal operation):

ECM calculates the target air/fuel ratio on basis of signals from O2 sensor, CKP sensor, MAP sensor, etc.
ECM compensates the basic fuel injection amount so as to obtain the calculated air/fuel ratio.

When accelerating:

The fuel injection amount is controlled to increase.

When decelerating:

The fuel injection amount is controlled to decrease.

Fuel Delivery System Component Description

CENFH5111701002

The fuel delivery system is composed of the low pressure fuel line components (fuel tank, filter, pump etc.), fuel vapor separator, high pressure fuel pump, high pressure fuel filter, fuel pressure regulator (located in the fuel vapor separator), delivery pipe, fuel injector and hoses.
Fuel is supplied through the primer bulb, low pressure fuel filter, and low pressure fuel pump to the fuel vapor separator.
Fuel flow from the fuel vapor separator is pressurized by the high pressure fuel pump and supplied through the high pressure fuel filter and fuel delivery pipe to the fuel injectors.
The pressure regulator maintains fuel pressure in the feed line between the high pressure fuel pump and fuel injector. This pressure, maintained at a constant level, is higher than the pressure in the vapor separator chamber.
When fuel feed line pressure exceeds vapor separator chamber pressure by more than approx. 250 kPa (2.55 kg/cm^2, 36.3 psi), the valve in the fuel pressure regulator will open and return the excess fuel to the vapor separator chamber.
Pressurized fuel enters into the intake ports through the fuel injector based on the sequential signals supplied from the ECM.

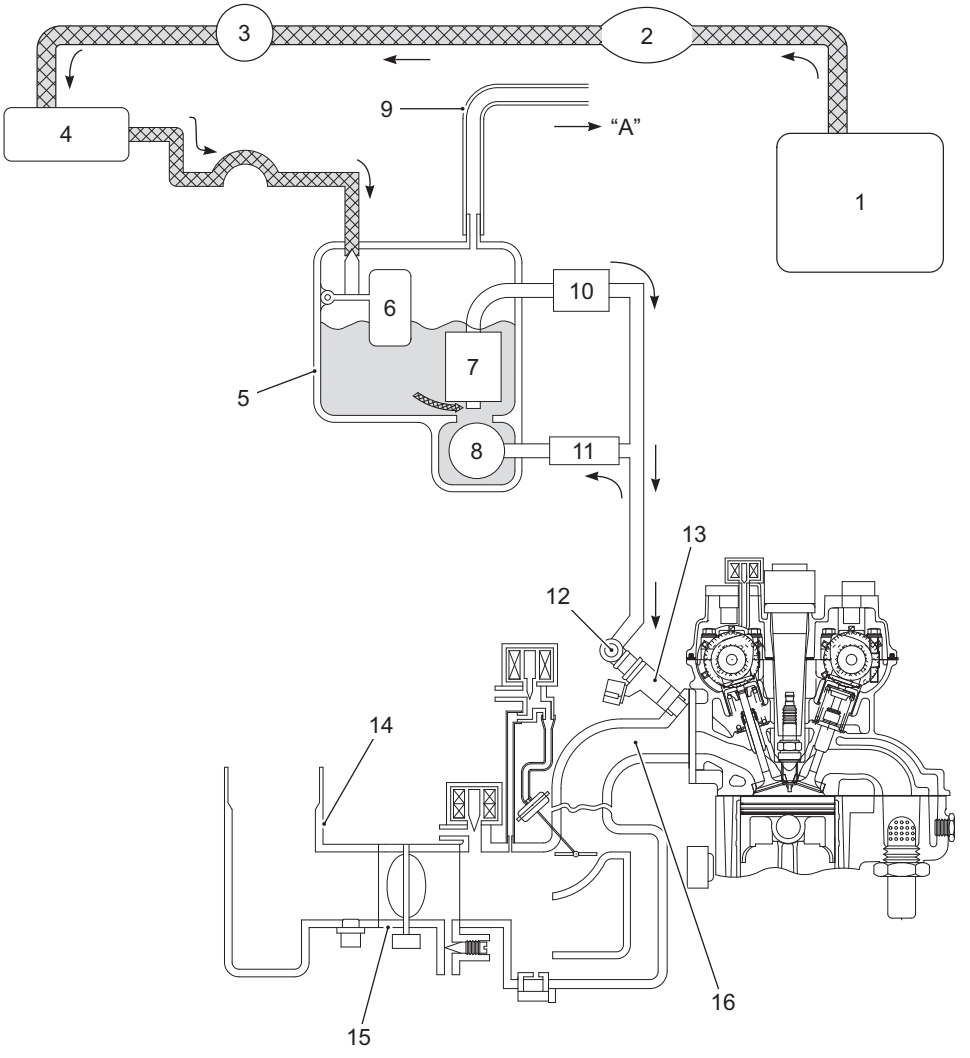

IFH511170013-01

1. Fuel tank	6. Float	11. Fuel cooler	16. Intake manifold
2. Primer bulb	7. High pressure fuel pump	12. Fuel delivery pipe	"A": To atmosphere
3. Low pressure fuel filter	8. Fuel pressure regulator	13. Fuel injector	
4. Low pressure fuel pump	9. Evaporation hose	14. Air intake silencer case	
5. Fuel vapor separator	10. High pressure fuel filter	15. Throttle body	

Low Pressure Fuel Pump

The low pressure fuel pump is operated by the plunger contacting the cam.

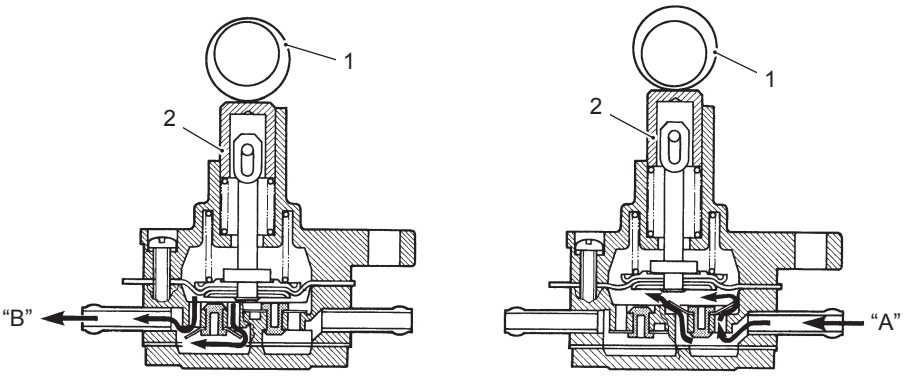

IEH511170004-02

1. Cam	"A": Fuel in
2. Plunger	"B": Fuel out

Fuel Vapor Separator

The fuel vapor separator incorporates a float system that maintains a constant fuel level inside the separator chamber. As the fuel level decreases, fuel flows into the vapor separator from the low pressure fuel pump.

The function of this unit is to separate vapors from fuel delivered by the low pressure fuel pump or fuel returned from the fuel pressure regulator.

This vapor is routed through the evaporation hose connecting the vapor separator cover to atmosphere.

High Pressure Fuel Pump

The high pressure fuel pump is an "integral" type in which the pump mechanism is located within the fuel vapor separator.

To supply the optimum fuel amount, the pump is driven by the duty cycle signal from ECM.

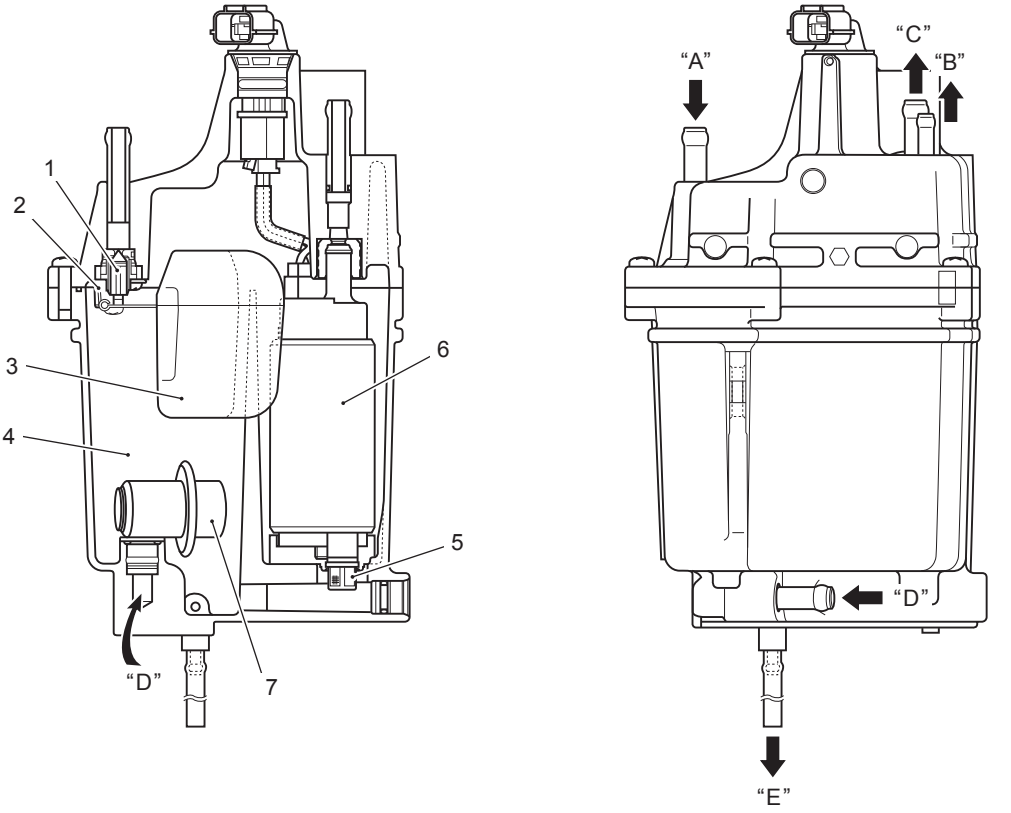

IEH511170005-02

1. Needle valve	4. Float chamber	7. Fuel pressure regulator	"C": Fuel outlet
2. Valve seat	5. Suction filter	"A": Fuel inlet	"D": Fuel return
3. Float	6. High pressure fuel pump	"B": Evaporation gas	"E": Fuel drain

Fuel Pressure Regulator

The fuel pressure regulator is located in the fuel vapor separator.
The regulator's function in the system is to maintain a constant fuel pressure relative to the injector while the engine is operating.
The regulator diaphragm chamber is open to the fuel vapor separator chamber to keep the pressure balanced.
Fuel pressure, adjusted by the regulator, is constantly maintained higher than the pressure in the fuel vapor separator chamber by approx. 250 kPa (2.55 kg/cm^2, 36.3 psi).
By-pass fuel is returned to the fuel vapor separator chamber.

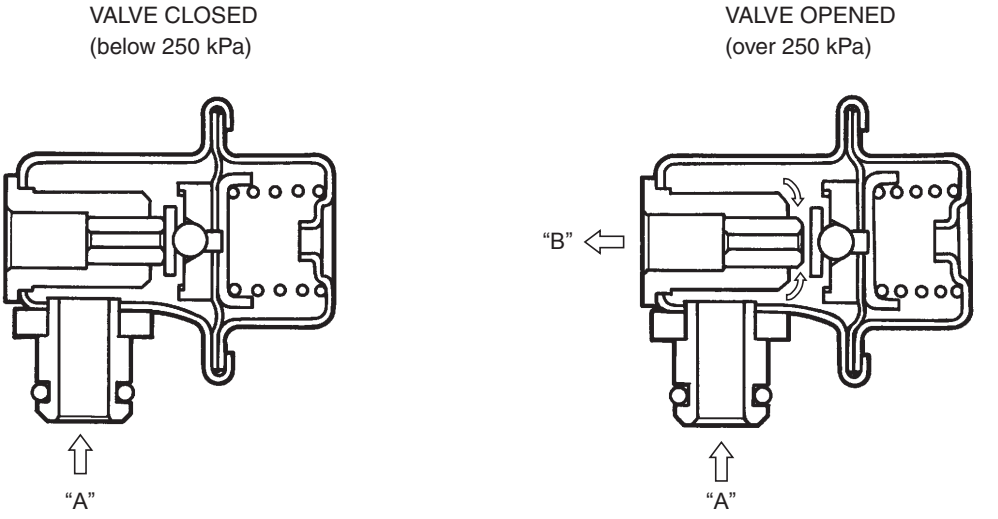

IEH511170006-01

"A": From fuel delivery line	"B": To float chamber (Fuel return)

Fuel Injector

The fuel injector is an electromagnetic valve operated by a signal from the ECM.
When the injection signal is supplied to the fuel injector, the solenoid coil is energized pulling up the plunger.
This opens the injector valve and injects fuel.
Because the fuel pressure is kept constant, the amount of fuel injected is determined by the amount of time (duration) the valve is open.

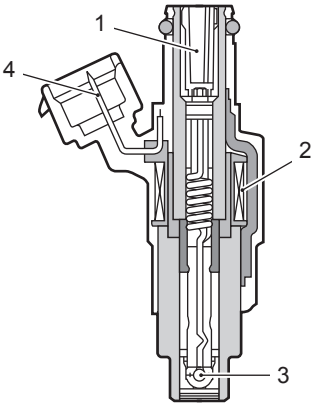

IEH511170007-01

1. Filter	3. Ball valve
2. Solenoid coil	4. Terminal

High Pressure Fuel Pump Control System Description

CENFH5111701003

To supply the optimum fuel amount, the ECM controls the fuel pump drive duty cycle, a repeated ON/OFF signal, at a specified rate (1 000 times a second).
Based on engine speed and battery voltage, the ECM determines the optimum duty (repeating “ON” time rate within a cycle) and sends this signal to the fuel pump.

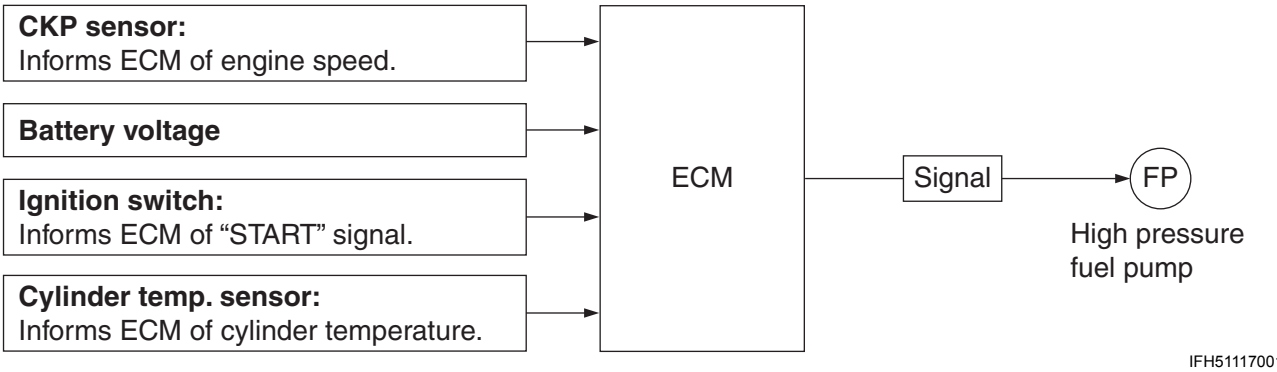

IFH511170014-01

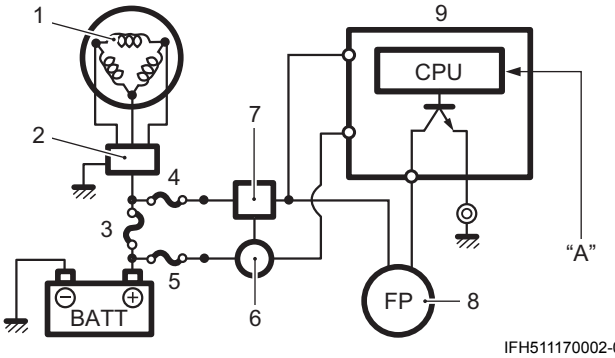

IFH511170002-03

1. Battery charge coil	5. 15 A fuse	9. ECM
2. Rectifier/regulator	6. Ignition switch	“A”: Sensor/switch signal input
3. 60 A fuse	7. ECM main relay	
4. 30 A fuse	8. High pressure fuel pump	

Duty cycle signal for fuel pump (example: 80% duty)

$$\frac{\text{“ON” time}}{\text{1 cycle time}} \times 100 = \text{duty (\%)}$$

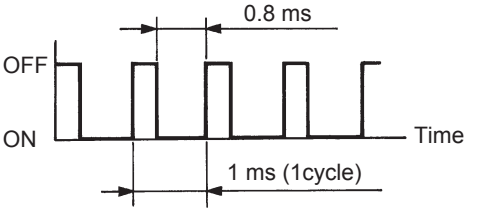

IEH511170010-01

Control Modes

Before start:

For 3 seconds after the ignition switch is turned “ON”, the pump is controlled to operate at 100% duty in order to initially pressurize the high pressure line.

When cranking:

The pump is controlled to operate at 50 – 100% duty.
Duty change depends on cylinder temperature.

When running (normal operation):

The pump is controlled to operate at 50 – 100% duty based on the current engine speed and battery voltage.

Air Intake Components Description

CENFH5111701004

Air, after entering through the silencer case, passes through the throttle body and flows into the surge tank where it is then distributed to the intake manifold.
Intake manifold pressure, monitored by the MAP sensor, is an indirect measurement of the intake air amount.
When the throttle is fully closed, the main supply of intake manifold air necessary to sustain engine idle passes through the by-pass air passage.
To maintain engine idle speed at specification, the ECM controlled IAC valve supplies a regulated amount of additional air through the IAC (idle air control) passage.

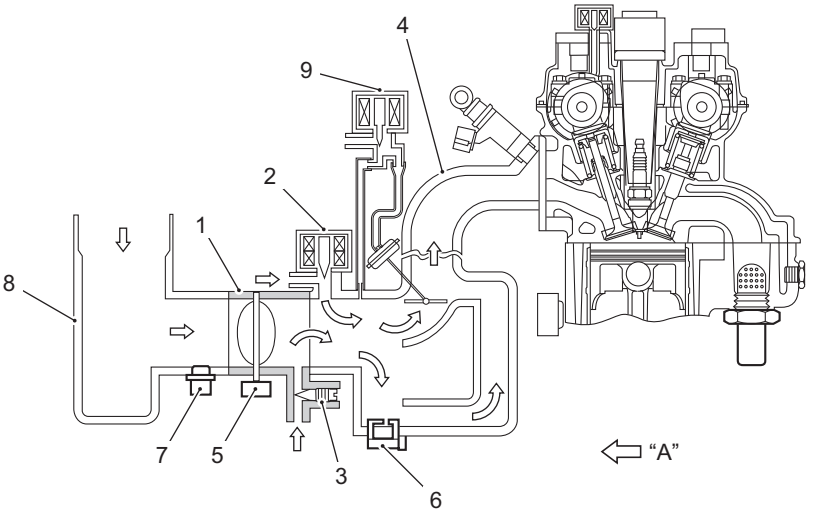

IFH511170003-01

1. Throttle body	4. Intake manifold	7. IAT sensor	"A": Air flow
2. IAC valve	5. Throttle position sensor	8. Air intake silencer case	
3. By-pass air screw	6. MAP sensor	9. VSV	

Throttle Body

- The throttle body assembly consists of the main bore, throttle valve, by-pass air passage, by-pass air screw and TPS (Throttle position sensor).
- The throttle body adjusts the intake air amount with the throttle valve which is connected to the throttle lever linkage.
- The TPS installed on the throttle body informs the ECM of the throttle valve opening angle.

NOTE

Do not try to adjust or remove any of the throttle body component parts (Throttle position sensor, throttle valve, throttle stop screw, etc.).
These components have been factory adjusted to precise specifications.

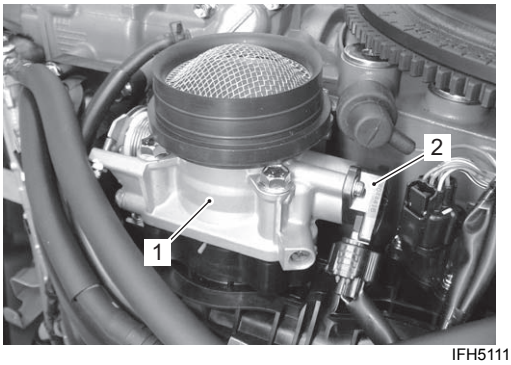

IFH511170015-04

1. Throttle body	2. Throttle position sensor

By-pass Air Screw/Passage

Since the throttle valve is almost fully closed when idling/trolling, the main flow of air necessary to maintain idling/trolling speed passes through the by-pass air passage.

The by-pass air screw controls the flow of air through the passage and provides a means of partially adjusting the total amount of air necessary for idling/trolling.

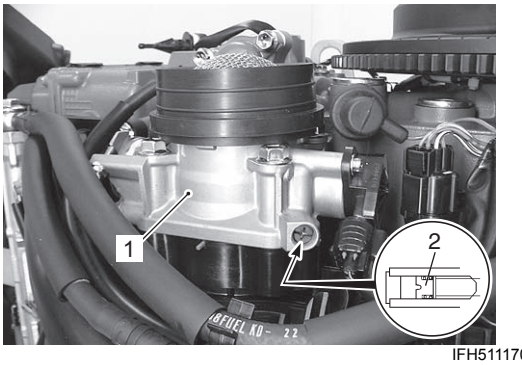

IFH511170006-02

1. Throttle body	2. By-pass air screw

IAC Valve/Passage

The IAC valve is a stepper motor type mounted on the intake manifold.

Its purpose is to control the amount of intake air flowing from the IAC passage.

The IAC valve consists of a stepper motor, rod, valve and other parts.

As the stepper motor is controlled by signals from the ECM, valve position changes will increase or decrease the air flow through the IAC passage.

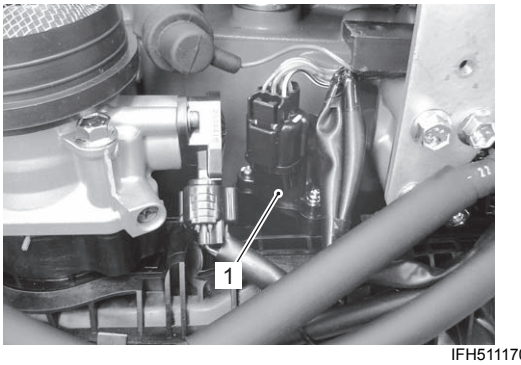

IFH511170007-03

1. IAC valve

Idle Air Control System Description

CENFH5111701005

The ECM controls the position of the IAC valve to regulate a portion of the intake air flow to the intake manifold.
This system is used for the following purposes:

- To keep idling/trolling at specified speed.
- To improve drivability when decelerating. (Dash-pot effect)
- To improve engine starting and warm-up performance. (Fast-idle function)

The sensors and switch shown below monitor the current engine condition and send signals to the ECM.
Based on these signals, the ECM determines the IAC valve setting necessary to achieve the target engine speed and outputs the signal for actuating the stepper motor inside the IAC valve.
The rotor of the stepper motor then turns in an amount equal to the steps of the signal supplied from the ECM, moving the valve via a screw shaft.

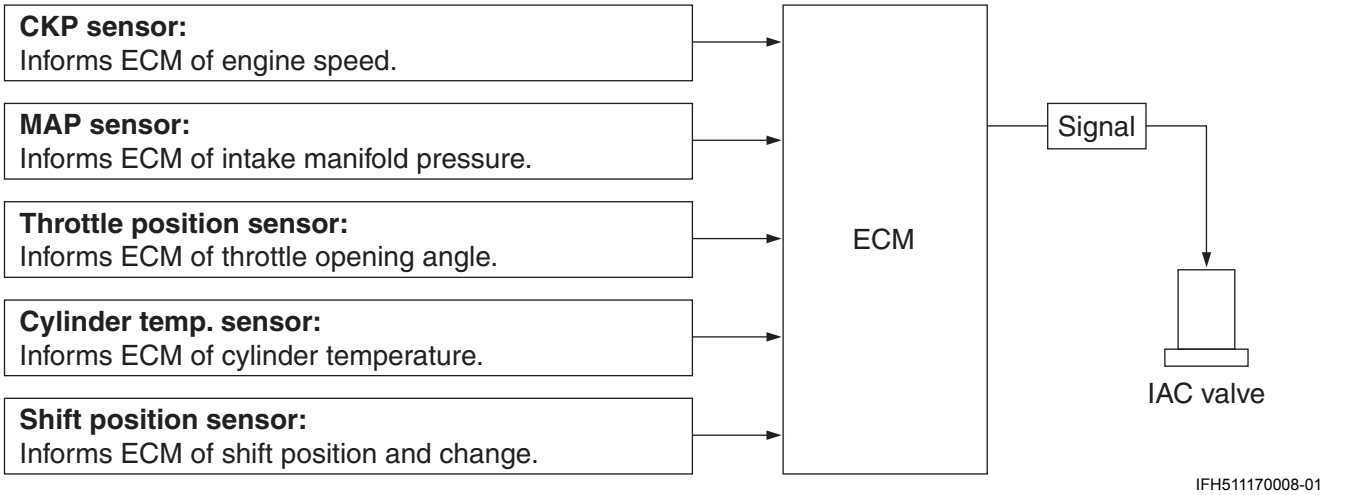

IFH511170008-01

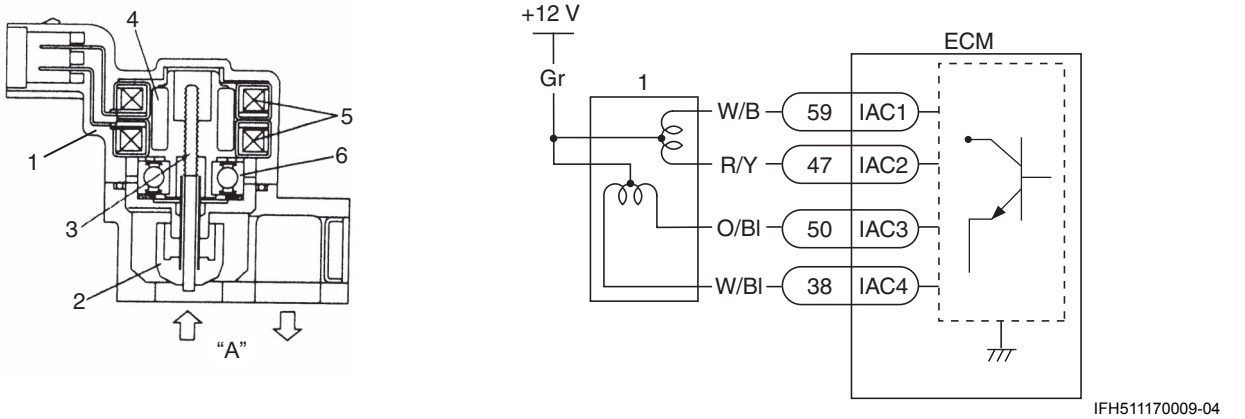

IFH511170009-04

1. IAC valve	3. Screw shaft	5. Coil	"A": Air flow
2. Valve pintle	4. Rotor	6. Bearing	

IAC Valve Control Mode

Before Start:

The IAC valve is initialized at 70% opening position when engine is not running (Ignition switch OFF).

When cranking:

The IAC valve is controlled to operate at approx. 40 – 100% duty.
Duty change depends on cylinder temperature.

After start (Fast-idle function):

The IAC valve is controlled to operate at approx. 10 – 100% duty, according to cylinder temperature, then decrease duty gradually to reach the set rpm at idle.

When idling/trolling:

The IAC valve is controlled so that engine speed is stable at the idling/trolling speed specified.
During this period, the IAC valve has a duty of approx. 15% but will vary slightly as idling/trolling conditions change.

When running (Normal operation):

The IAC valve is controlled to operate at 10 – 100% duty, dependent on current engine conditions.

When decelerating (Dash-pot effect):

When the throttle valve is suddenly returned to full close and the throttle position sensor signal changes to “fully closed”, the IAC valve operates at a controlled gradual return to idle/troll operating duty to prevent engine stalling or unstable running.

NOTE

Due to the limited intake air flow from the IAC passage and in order to effectively use both the “Dash-pot effect” and “Fast-idle function”, the by-pass air screw must be adjusted to provide IAC valve operation at approx. 15 ± 5% duty at the engine idling/trolling specification.
For the by-pass air screw adjustment procedure, refer to “Idle Speed and Idle Air Control (IAC) Duty Inspection” in Section 0B (Page 0B-14).

Diagnostic Information and Procedures

Fuel Pressure Inspection

CENFH5111704001

⚠ WARNING

Gasoline is a flammable material that can cause fire hazard or burns.

Before starting the following procedure, be sure to observe "Precautions on Fuel System Service" (Page 1G-1) in order to reduce the risk or fire and personal injury.

1) Loosen the three bolts and remove the fuel hose guard (1).

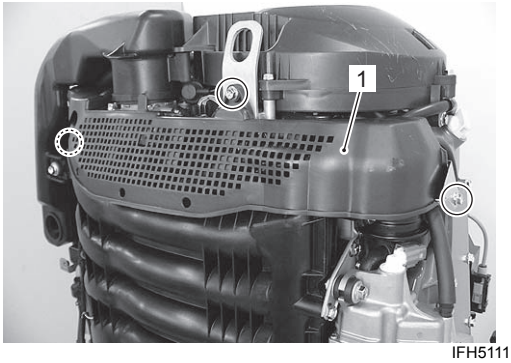

IFH511170029-01

2) Relieve fuel pressure in fuel feed line.
Refer to "Fuel Pressure Relief Procedure" (Page 1G-16).

3) Remove ring gear cover and air intake silencer case (2).
Refer to "Air Intake Silencer Case Removal and Installation" in Section 1D (Page 1D-2).

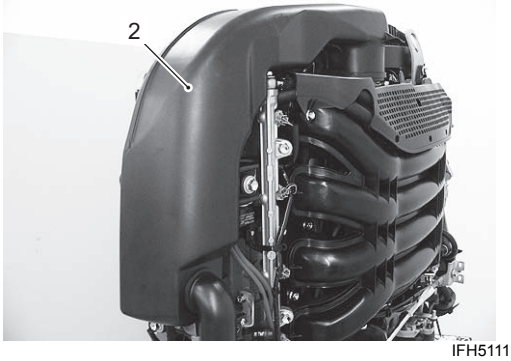

IFH511170030-01

4) Loosen the clamp and place a large cloth over the end of fuel feed hose (3).
Disconnect high pressure fuel feed hose (3) from fuel delivery pipe upper union (4).

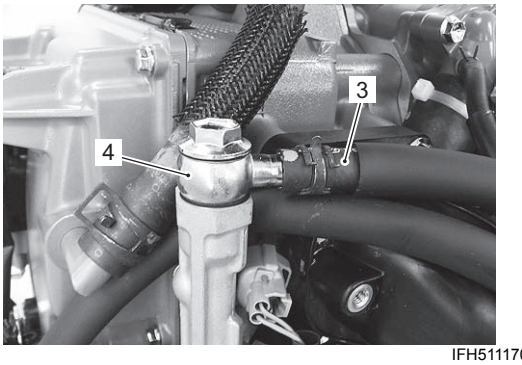

IFH511170016-02

5) Connect special tools (pressure gauge, pressure hose and pressure joint) between fuel feed hose and fuel delivery pipe upper union as shown in figure. Clamp the hose securely to ensure that no leaks occur during checking.

⚠ WARNING

Gasoline is a flammable material that can cause fire hazard or burns.

A small amount of fuel may be released when the fuel feed hose is disconnected.
Place container under the fuel feed hose or fuel delivery pipe with a shop cloth so that the released fuel is caught in the container or absorbed by the cloth.
Place the fuel soaked cloth in an approved container.

Special tool
TOOL (A): 09912–58442 (Fuel pressure gauge)
TOOL (B): 09912–58432 (Fuel pressure hose)
TOOL (C): 09912–58490 (3-way joint & hose)

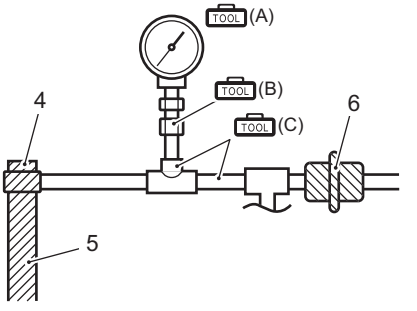

IFH511170017-01

4. Delivery pipe upper union	6. High pressure fuel filter
5. Fuel delivery pipe	

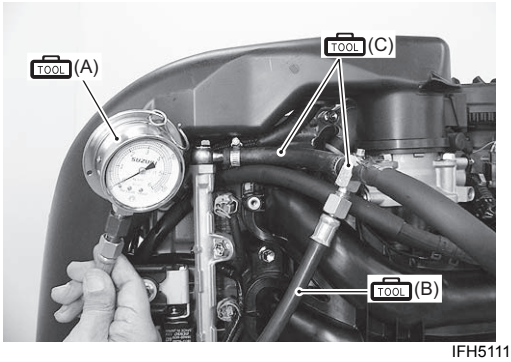

IFH511170031-02

6) Reinstall ring gear cover and air intake silencer case. Refer to “Air Intake Silencer Case Removal and Installation” in Section 1D (Page 1D-2).
7) Ensure the emergency stop switch lock plate is in place.
Shift into neutral position.
8) Squeeze fuel primer bulb until you feel resistance.
9) Turn ignition switch to “ON” for 3 seconds (to operate the fuel pump), then turn it “OFF”.
10) Repeat this (“ON” and “OFF”) procedure 3 or 4 times to pressurize the fuel system and then check the fuel pressure.

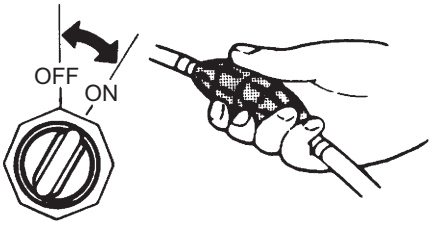

I9J011170018-01

11) Check for any signs of fuel leakage.
12) Measure fuel pressure at cranking or idle speed operation.

Fuel pressure
Standard: Approx. 255 kPa (2.55 kg/cm², 36.3 psi.)

13) Stop engine and wait 5 minutes.
Check the residual fuel pressure in line.

Residual fuel pressure
Standard: 200 kPa (2.0 kg/cm², 28.4 psi.) or more

⚠ WARNING

Gasoline is a flammable material that can cause fire hazard or burns.

The fuel feed line is under high fuel pressure, make sure to release fuel pressure according to the fuel pressure relief procedures mentioned earlier.
Use the following procedures to remove the fuel pressure gauge.

- **Place a container under the joint to catch the fuel.**
- **Cover the joint with rag and loosen joint nut slowly to gradually release any residual fuel pressure.**

14) After checking fuel pressure, remove fuel pressure gauge.

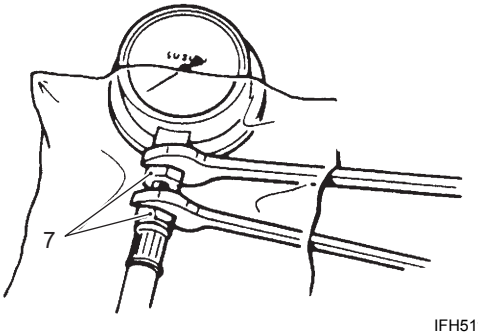

IFH511170028-01

7. Joint nut

15) Reconnect fuel line.
16) With the engine not running and ignition switch “ON”, check the fuel system for leaks.
17) Reinstall fuel hose guard, and tighten the bolts securely.

Fuel System Diagnosis

CENFH5111704004

Condition	Possible cause	Correction / Reference Item
Engine will not start or hard to start (Fuel does not reach the fuel delivery pipe).	Clogging, bending or improper routing of fuel hose.	*Clean, repair or replace.*
	Fuel pump failure.	*Replace.*
	Fuel pressure regulator failure.	*Replace.*
	Fuel injector(s) failure.	*Replace.*
	Wiring connection failure.	*Repair or replace.*
Engine will not start or hard to start.	Shift position sensor failure	*Replace.*
	Throttle position sensor failure.	*Replace.*
	MAP sensor failure.	*Replace.*
	ECM failure.	*Replace.*
	Cylinder temp. sensor failure.	*Replace.*
	IAT sensor failure.	*Replace.*
	High pressure fuel pump failure.	*Replace.*
	Fuel hose improperly routed.	*Reroute properly.*
	IAC system failure.	*Check idle air control system.*
Unstable idling/trolling or engine tends to stall.	Shift position sensor failure	*Replace.*
	Throttle position sensor failure.	*Replace.*
	IAC system failure.	*Check idle air control system.*
	IAC passage clogged.	*Clean.*
	ECM failure.	*Replace.*
	Wire continuity/connection failure.	*Repair or replace.*
	Fuel injector(s) clogged.	*Replace.*
	Fuel pressure regulator failure.	*Check fuel pressure. Replace if necessary.*
	High pressure fuel pump failure.	*Check fuel pump and its circuit. Replace.*
	Fuel filter clogged.	*Clean or replace.*
	Clogging, bending or improper routing of fuel hose.	*Clean, reroute, repair or replace.*
Insufficient engine power in high speed range (Air intake system failure).	Air leakage from air intake system.	*Repair or replace.*
Insufficient engine power in high speed range (Control circuit or sensor failure).	Fuel pressure too low.	*Check fuel pressure. Repair or replace.*
	Throttle position sensor failure.	*Replace.*
	ECM failure.	*Replace.*
Insufficient engine power in high speed range (Engine internal parts or electrical equipment failure).	Fuel injector(s) clogged.	*Replace.*
	Throttle position sensor failure.	*Replace.*
	ECM failure.	*Replace.*

Fuel Injection System Troubleshooting

CENFH5111704003

Before starting the troubleshooting, make sure that:

- There is no self-diagnostic code indication.
- Emergency stop switch plate is set in place.

Step 1

Check fuel injector operating sound.

- Check each injector for operating sound at engine cranking. (☞(Page 1G-24))

Do all four injectors make operating sound?

Yes	Fuel injector circuit is in good condition.
No	Go to step 2.

Step 2

Check fuel injector resistance.

- Turn ignition switch to “OFF”, disconnect connectors from fuel injectors.
- Check for proper connection to fuel injector at each terminal.
- If good condition, check all fuel injector for resistance. (☞(Page 1G-24))

Are all injectors in good condition?

Yes	Go to step 3.
No	Faulty fuel injector.

Step 3

Check fuel injector power supply.

- Measure voltage between each “Gr” wire terminal of fuel injector connector and engine body ground with ignition switch turned “ON”.

Is voltage 10 – 14 V?

Yes	Go to step 4.
No	• “Gr” wire open or shorted. • If it is in good condition, check ECM power source and ground circuit.

Step 4

Check Wire circuit.

- Turn “OFF” ignition switch.
- Disconnect connector from ECM.
- Measure resistance between each “O/B”, “B/Br”, “R/W”, “Lg” wire terminal of the fuel injector connector and body ground.

Is resistance infinity?

Yes	Go to step 5.
No	“O/B”, “B/Br”, “R/W”, and/or “Lg” wire(s) are shorted to ground.

Step 5

Check Wire circuit.

- Connect connector to ECM.
- Measure voltage between each “O/B”, “B/Br”, “R/W”, “Lg” wire terminal of fuel injector connector and body ground with ignition switch turned “ON”.

Is voltage 0 V?

Yes	Go to step 6.
No	“O/B”, “B/Br”, “R/W”, and/or “Lg” wire(s) are shorted to power supply circuit.

Step 6

Check fuel injector operating signal.

- Connect connectors to each fuel injector and ECM with ignition switch turned “OFF”.
- Measure fuel injector operating signal between each “41”, “43”, “46”, “39” terminal of ECM and body ground. (☞(Page 1G-25))

Is voltage 6 – 10 V or over?

Yes	If check result is satisfactory, substitute a known-good ECM and recheck.
No	“O/B”, “B/Br”, “R/W”, and/or “Lg” wire(s) are open circuit.

Service Instructions

Fuel Pressure Relief Procedure

CENFH5111706001

After making sure that engine is cold, relieve fuel pressure as follows:

1) Turn the ignition switch “OFF”.
2) Loosen the three bolts and remove the fuel hose guard (1).

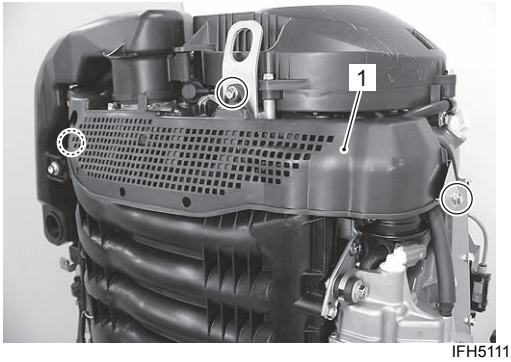

IFH511170032-01

3) Disconnect the high pressure fuel pump lead wire connector (2) at high pressure fuel pump.

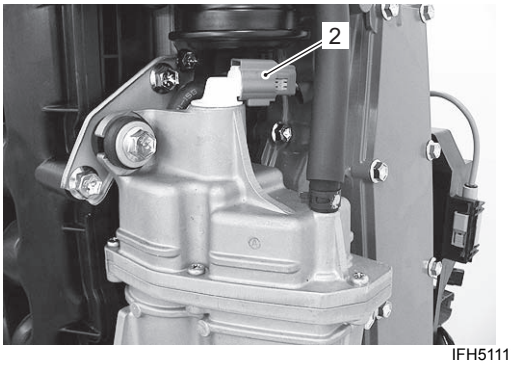

IFH511170033-01

4) Disconnect the ignition coil primary lead wire connectors (3) from all of the ignition coils.

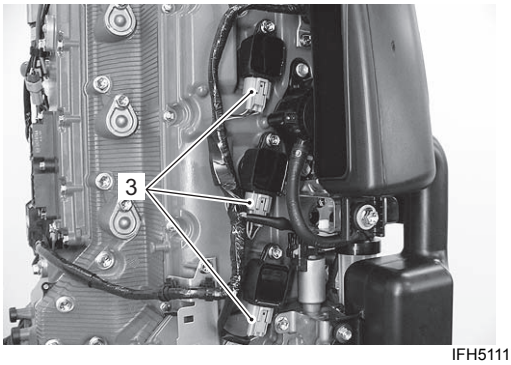

IFH511170034-01

5) Crank the engine 5 – 10 times (3 seconds each time) to dissipate the fuel pressure in lines.
6) Make sure fuel pressure has been relieved by pinching the high pressure fuel hose (4) between finger tips (the line should feel soft, without pressure).

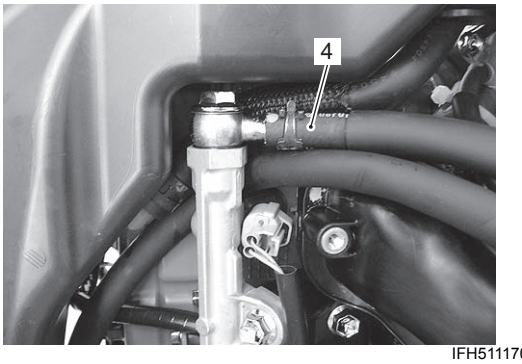

IFH511170035-01

7) Upon completion of servicing, connect the ignition coil primary lead wires and high pressure fuel pump lead wire.

Fuel Line Removal and Installation

CENFH5111706002

Pay special attention to the following points when removing or installing fuel hoses.

⚠ WARNING

Gasoline is a flammable material that can cause fire hazard or burns.

Before starting the following procedure, be sure to observe “Precautions on Fuel System Service” (Page 1G-1) in order to reduce the risk or fire and personal injury.

- The fuel feed line is under high pressure, use special care when servicing it.
- Spilled gasoline should be wiped off immediately.
- Perform the following checks to ensure proper and safe operation of the repaired unit.
  - Check fuel hose routing.
    Refer to “Fuel Hose Routing” in Section 4B (Page 4B-1).
  - Check for fuel leakage.
    Refer to “Fuel Leakage Check Procedure” (Page 1G-17).

Fuel Line Inspection

CENFH5111706003

Visually inspect fuel lines for evidence of fuel leakage, cracking, deterioration, or damage. Make sure all clamps are secure. Replace parts as needed.

Fuel Leakage Check Procedure

CENFH5111706004

After performing any fuel system service, always be sure there is no fuel leakage by checking as follows.

1) Squeeze fuel primer bulb until you feel resistance.
2) Shift into “Neutral” position.
3) Ensure emergency stop switch lock plate is in place.
4) Turn ignition switch “ON” for 3 seconds (to operate fuel pump), then turn it “OFF”.
   Repeat this (“ON” and “OFF”) procedure 3 or 4 times to pressurize the fuel system.
5) Once pressurized, check all connections and components for any signs of leakage.

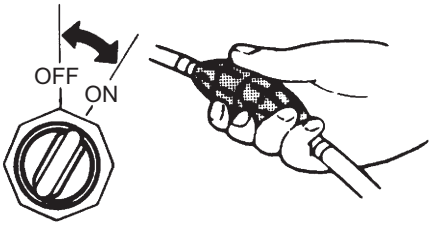

I9J011170020-01

Inspection of Fuel Hose Connections

CENFH5111706005

Note that the fuel hose connection varies with each type of pipe. Be sure to connect and clamp each hose correctly by referring to the figure.

- For type “A” (short barbed end) pipe, the hose must completely cover pipe.

Type “A”

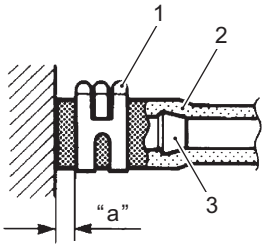

I9J011170012-01

1. Clamp (Clip)	3. Joint pipe
2. Hose	“a”: 3 – 7 mm (0.1 – 0.3 in)

- For type “B” (bent end) pipe, hose must cover the straight part of pipe by 20 – 30 mm (0.8 – 1.2 in.).

Type “B”

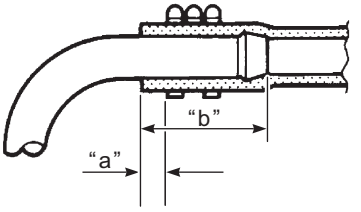

I9J011170013-01

“a”: 3 – 7 mm (0.1 – 0.3 in)	“b”: 20 – 30 mm (0.8 – 1.2 in)

- For type “C” pipe, hose must fit up against the flanged part of pipe.

Type “C”

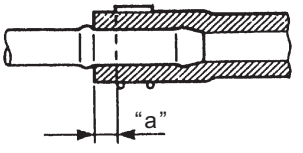

I9J011170014-01

“a”: 3 – 7 mm (0.1 – 0.3 in)

- For type “D” pipe, the hose must cover the pipe by 20 – 30 mm (0.8 – 1.2 in.).

Type “D”

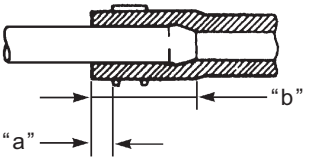

I9J011170015-01

“a”: 3 – 7 mm (0.1 – 0.3 in)	“b”: 20 – 30 mm (0.8 – 1.2 in)

High Pressure Fuel Pump Operating Sound Inspection

CENFH5111706006

1) Install the emergency stop switch lock plate into position.
2) Shift into neutral.
3) Turn ignition switch “ON” and check for fuel pump operating sound.

NOTE

Fuel pump operating sound is low because the pump is inside the fuel vapor separator. If you cannot hear the pump sound clearly, use a sound scope or long blade screw driver.

Fuel pump operating sound
Sounds for approx. 3 seconds only (each time the ignition switch is turned to the “ON” position)

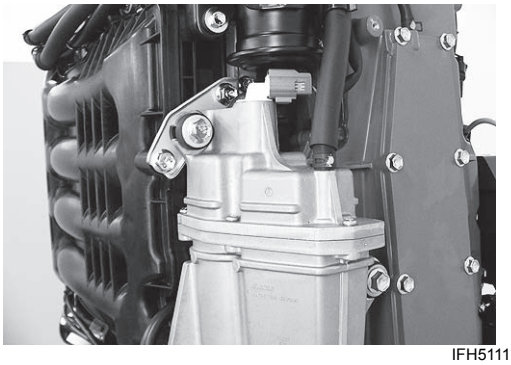

IFH511170036-02

4) If no pump operating sound is heard:
   a) Turn ignition switch to the “OFF” position, check for contact failure in the lead wire connector.
   b) Check that the drive voltage is outputting from the ECM and no abnormal conditions exist in the engine main wiring harness.
   c) If inspection in steps “a” and “b” are OK, replace the high pressure fuel pump.

Fuel Vapor Separator Removal and Installation

CENFH5111706007

Removal

⚠ WARNING

Gasoline is a flammable material that can cause fire hazard or burns.

Before starting the following procedure, be sure to observe “Precautions on Fuel System Service” (Page 1G-1) in order to reduce the risk or fire and personal injury.

1) Relieve fuel pressure in fuel feed line.
   Refer to “Fuel Pressure Relief Procedure” (Page 1G-16).
2) Remove the lower side covers.
   Refer to “Lower Side Cover Removal and Installation” in Section 2A (Page 2A-3).
3) Remove the two bolts (1) securing front panel.

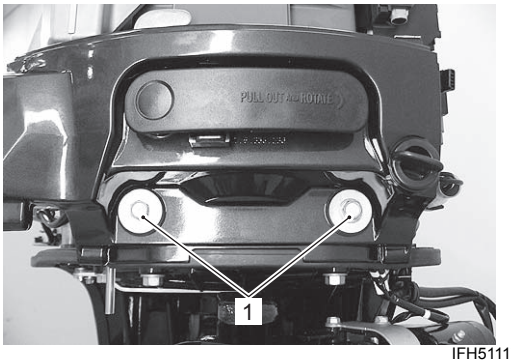

IFH511170037-01

4) Loosen the three bolts and remove the fuel hose guard (2).

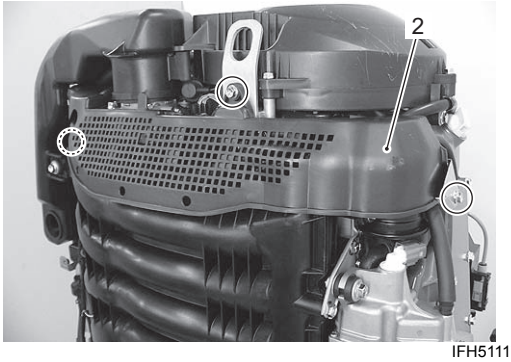

IFH511170038-01

5) Disconnect high pressure fuel pump lead wire connector (3) at fuel pump.
6) Disconnect fuel hose (4) from fuel vapor separator.

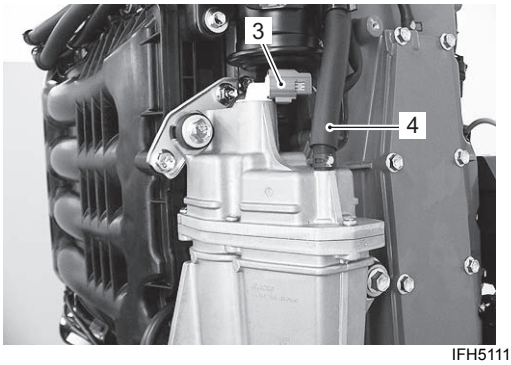

IFH511170019-02

7) Remove the three bolts securing fuel vapor separator.

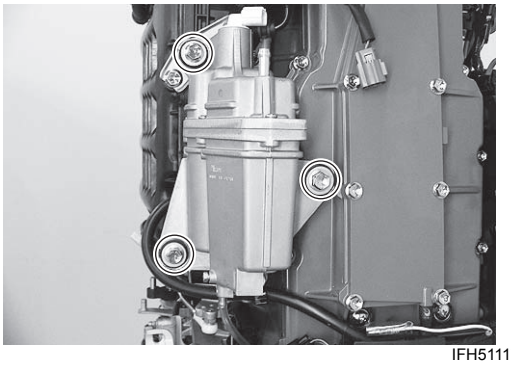
IFH511170039-01

8) Disconnect fuel return hose (5) from fuel vapor separator.

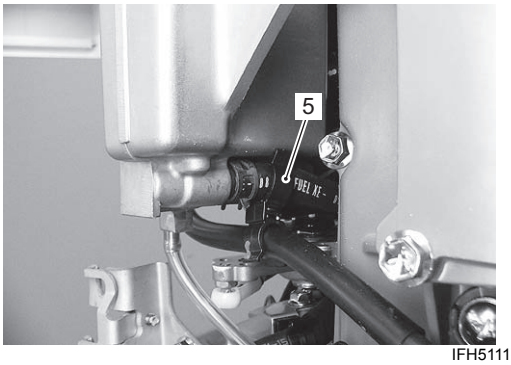

IFH511170020-02

9) Disconnect fuel hose (6) from high pressure fuel filter, then remove evaporation hose (7) from fuel vapor separator.

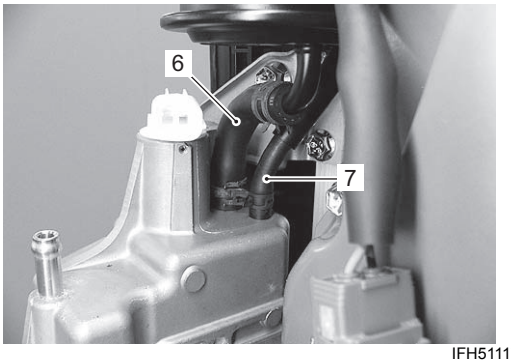

IFH511170021-02

Installation
Installation is reverse order of removal with special attention to the following steps.

- Install the fuel drain hose (1) through the slit of side cover seal as shown in figure.

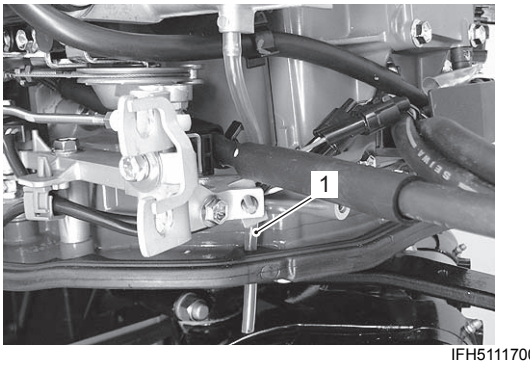

IFH511170040-01

- Check to ensure that all removed parts are back in place.
- Check fuel hose routing.
  Refer to “Fuel Hose Routing” in Section 4B (Page 4B-1).
- Check for fuel leakage.
  Refer to “Fuel Leakage Check Procedure” (Page 1G-17).

Fuel Vapor Separator Disassembly and Assembly

CENFH5111706008

Disassembly

1) Remove the fuel vapor separator.
   Refer to “Fuel Vapor Separator Removal and Installation” (Page 1G-18).
2) Remove five screws (1).
   Remove separator cover (2) with high pressure fuel pump from separator case (3).

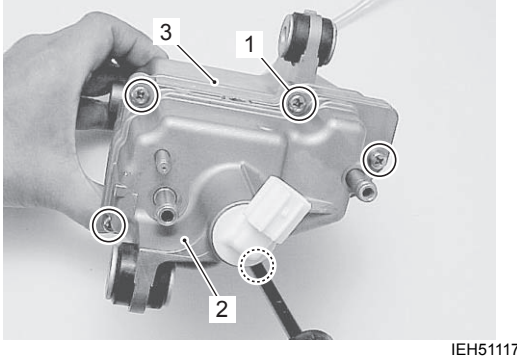

IEH511170029-01

3) Remove the screw (4) securing float pin (5).
4) Remove the float (6), float pin (5) and needle valve (7).

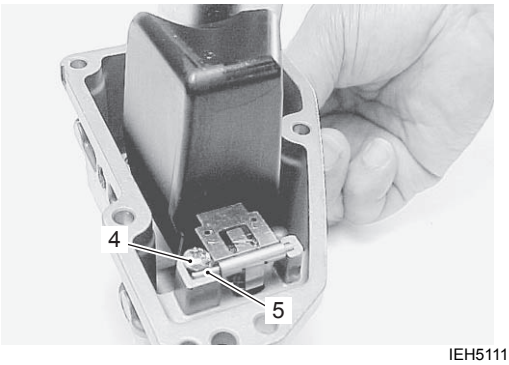

IEH511170030-01

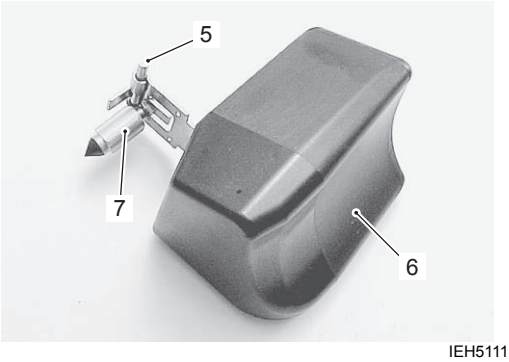

IEH511170031-01

5) Remove screw (8) and valve seat (9).

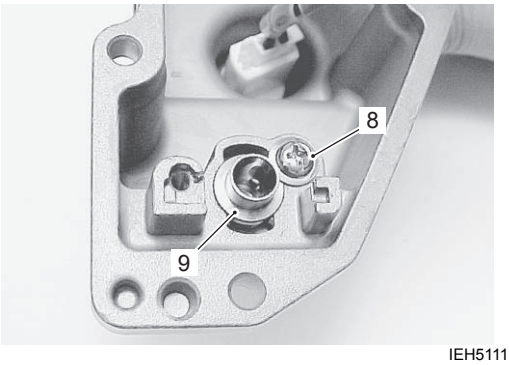

IEH511170032-01

6) Remove screw and fuel pressure regulator (10) from separator case.

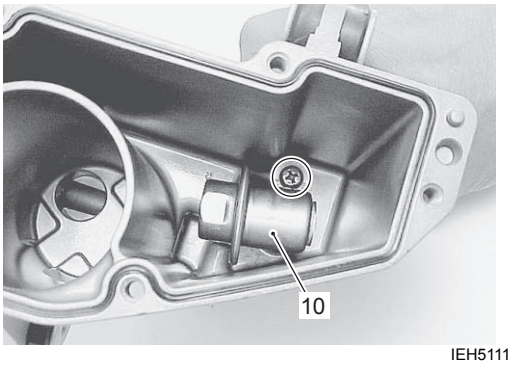

IEH511170033-01

7) Remove suction filter (11).

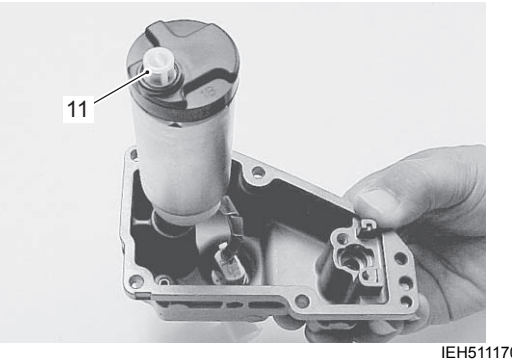

IEH511170034-01

8) Remove high pressure fuel pump (12) and grommet (13) from separator cover and then disconnect pump lead wire connector (14).

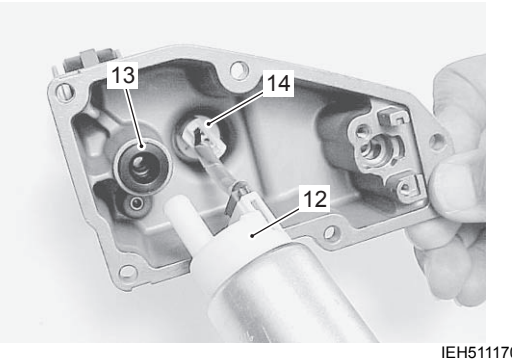

IEH511170035-01

Assembly
Assembly is reverse order of disassembly with special attention to the following steps.

High pressure fuel pump

- Connect pump lead wire connector, then install grommet (1) and high pressure fuel pump (2).

NOTE

Apply fuel to grommet before installing.

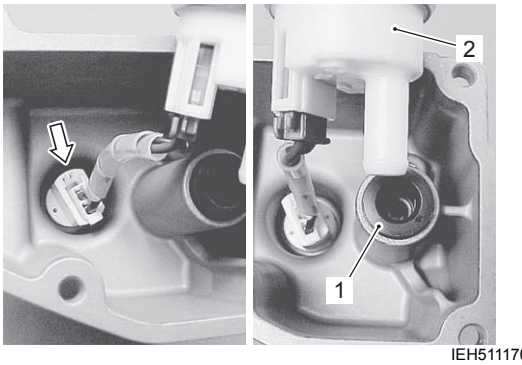

IEH511170036-01

Float / Float pin

- Install float (1) and float pin (2), then secure float pin with screw (3).

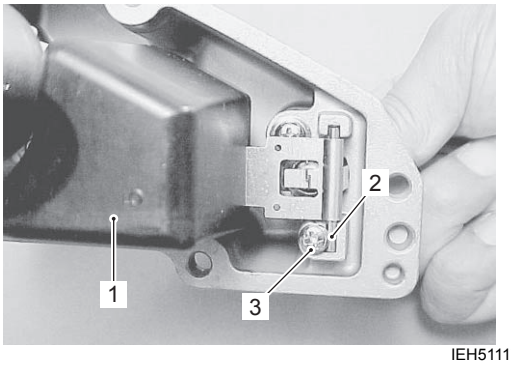

IEH511170037-01

NOTE

After assembling, check for smooth and free float movement.

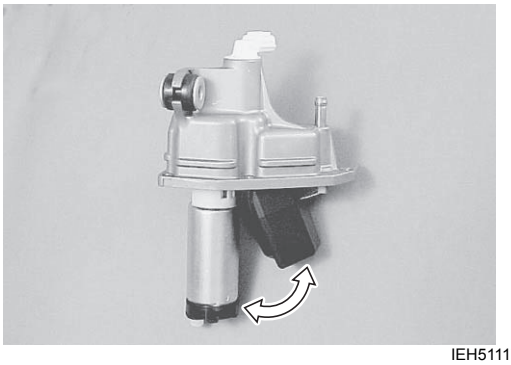

IEH511170038-01

Checking float height

- Measure float height.

Special tool
(A): 09900–20101 (Vernier calipers (150 mm))

Float height "a"
Standard: 48 ± 3 mm (1.89 ± 0.12 in)

NOTE

Make sure that the float weight is not applied to the needle valve.

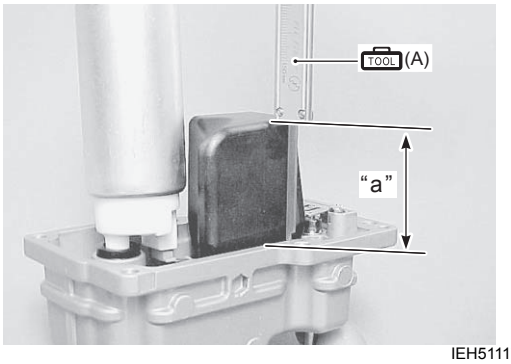

IEH511170039-01

Setting float height

- To correct specification, bend only adjustment tab (1).

NOTE

When adjusting the tab, do not bend to the point that it applies pressure to the needle and seat.

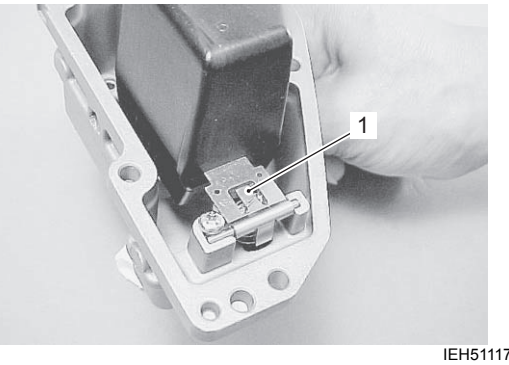

IEH511170040-01

Fuel pressure regulator

- Install fuel pressure regulator and tighten screw securely.

NOTE

Apply fuel to O-ring (1) before installing fuel pressure regulator.

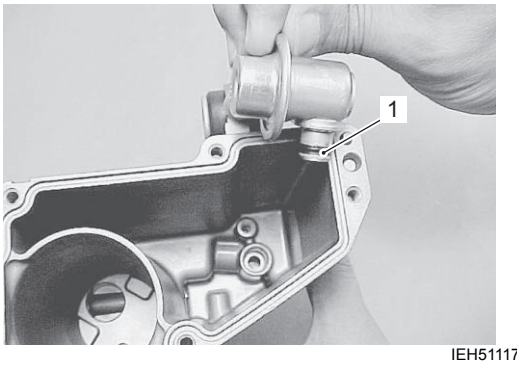

IEH511170041-01

Separator cover/Separator case

1) Install seal ring (1), then apply SUZUKI Bond evenly to only the outside mating surface of the separator case as shown in figure.

1207B : Sealant 99000–31140 (SUZUKI Bond 1207B (100 g))

NOTE

- **Clean mating surfaces before applying bond.**
- **Do not apply bond to seal ring, groove and inside mating surface.**

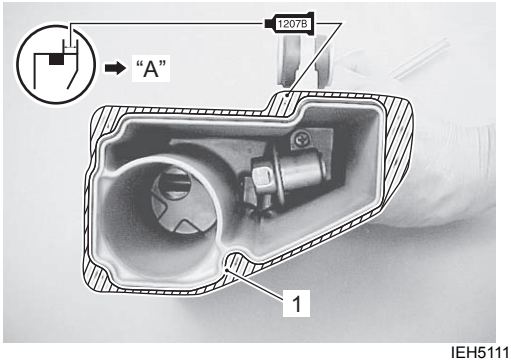

IEH511170042-01

"A": Outside

2) Install separator case, then tighten screws securely.

NOTE

When installing separator case, align suction hole "B" with hole "C" of separator case.

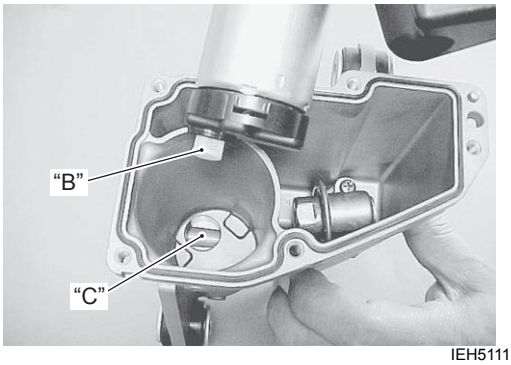

IEH511170043-02

NOTE

Separator cover and case are a set.
If any repair is required on the cover or case, replace them as a fuel vapor separator assembly.



IEH511170072-01

Final Assembly Check

- Check to ensure that all removed part are back in place.
- Check fuel hose routing.
  Refer to "Fuel Hose Routing" in Section 4B (Page 4B-1).
- Check for fuel leakage.
  Refer to "Fuel Leakage Check Procedure" (Page 1G-17).

Inspection of Fuel Vapor Separator Component Parts

CENFH5111706009

NOTE

If cracks, excessive wear or other damage is found on any component, replace the component.

Needle Valve / Valve Seat

Inspect needle valve and valve seat for groove, other damage or dirt.
Replace or clean if necessary.

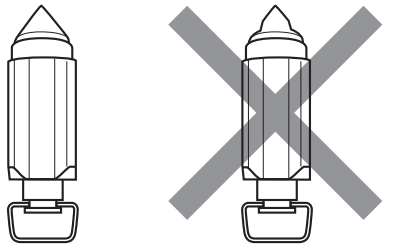

IEH511170044-01

Float

Inspect the float for cracks or other damage.
Replace if necessary.



IEH511170045-01

Filter

Inspect pump suction filter for clog or other damage.
Replace or clean if necessary.



IEH511170046-01

Fuel Pressure Regulator

Inspect fuel pressure regulator for damage or corrosion.
Check fuel pressure regulator operation.

Special tool

- **TOOL (A): 09952–99320 (Hand air pump)**
- **TOOL (B): 09940–44121 (Air pressure gauge)**
- **TOOL (C): 09940–44130 (Attachment)**
- **TOOL (D): 09912–58490 (3-way joint & hose)**

1) Connect special tools to inlet side of regulator as shown in figure.

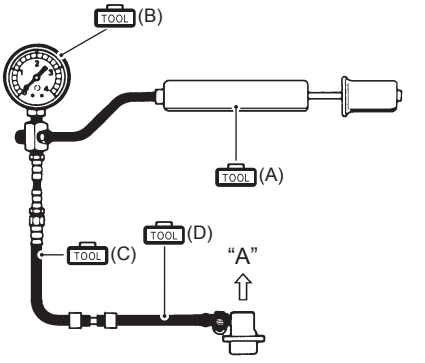

IEH511170047-02

2) Pump air into regulator using pump until air is released through outlet side "A".
3) Read pressure on gauge when air is released.

Regulator operating pressure:
240 – 270 kPa (2.4 – 2.7 kg/cm^2, 34.1 – 38.4 psi)

If out of specification, replace regulator.

Fuel Injector Inspection with Injector in Place

CENFH5111706010

1) Using a sound scope or equivalent, check the operating sound of the fuel injector when the engine is running or cranking.
   Injector operating sound cycle should vary according to engine speed.
   If no sound or an unusual sound is heard, check injector circuit (wire or connector) or injector.

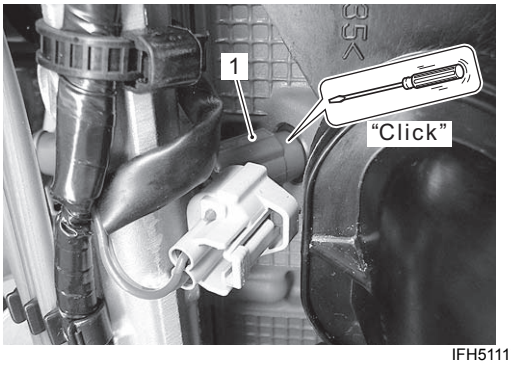

IFH511170041-01

1. Injector body

2) Disconnect the lead wire connector from the fuel injector.
3) Connect a digital tester between the terminals of the injector and measure resistance.
   If out of specification, replace the fuel injector.

Special tool
TOOL : 09900–25008 (Multi circuit tester set)

Tester knob indication
Resistance (Ω)

Fuel injector resistance
Standard: 10 – 14 Ω at 20 °C

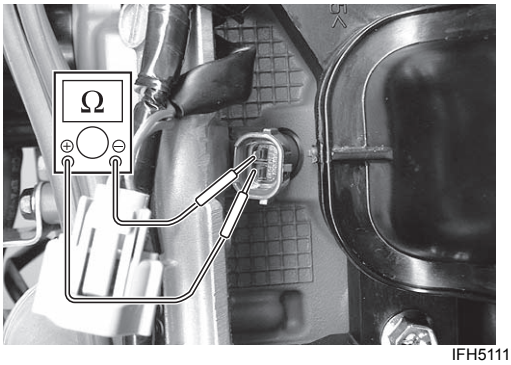

IFH511170042-01

4) Connect the lead wire connector to the fuel injector securely.

Individual Fuel Injector Operating Sound Inspection

CENFH5111706011

1) Disconnect the ignition coil lead wire connectors from all of the ignition coils.
2) Disconnect the fuel injector lead wire connector and connect the test cord.

Special tool
TOOL (A): 09930–89260 (Injector test cord (A))

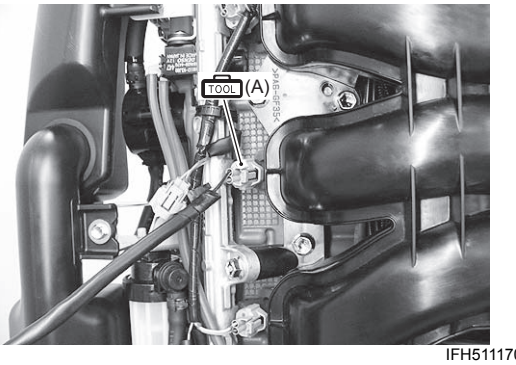

IFH511170043-01

NOTICE

If battery power is applied too long in any of the following tests, the coil of the fuel injector may burn.

Fuel injector test must be completed within few seconds to avoid burning of the coil.

3) Connect Gr wire to body ground.
4) Momentarily touch the B/Y wire to the starter motor magnetic switch terminal "B" (connected to battery positive (+) terminal) and check for injector operating sound.
   If out of specification, replace fuel injector.

Fuel injector operating sound
"Click"

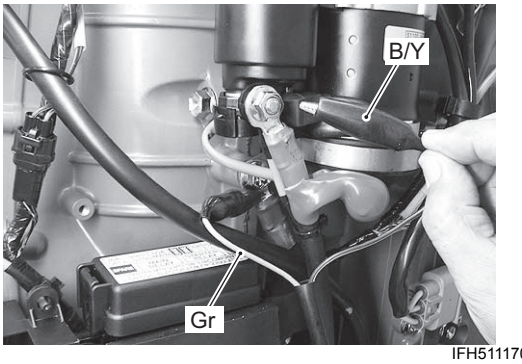

IFH511170044-02

Fuel Injector Operating Signal Inspection

CENFH5111706012

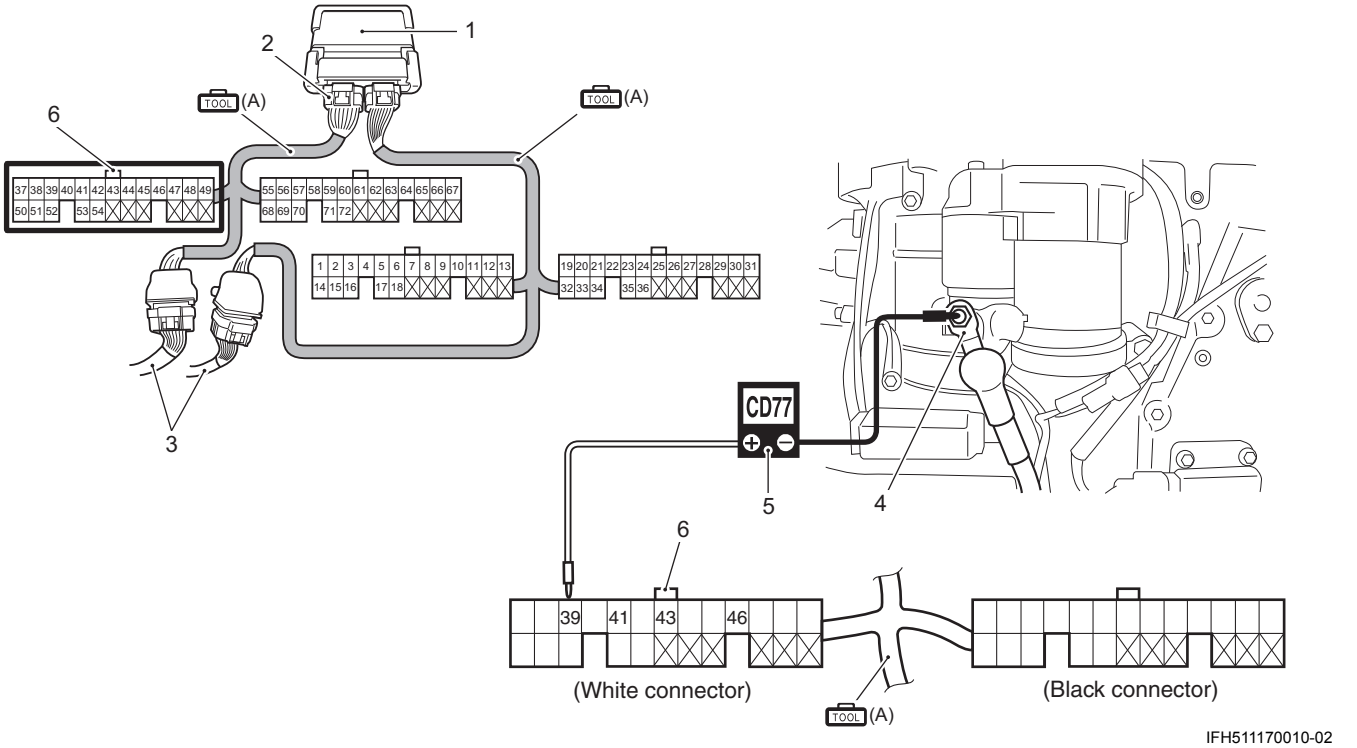

IFH511170010-02

1. ECM	3. Wire harness	5. Stevens peak reading voltmeter CD-77
2. Gray test cord connector side	4. Starter motor magnetic switch “B” terminal	6. White connector

Special tool
TOOL (A): 09930–88730 (36-pin test cord set)
CD-77 : Stevens peak reading voltmeter CD-77

Tester knob indication
NEG 50

1) Disconnect all ignition coil connectors from the ignition coils.
2) Connect the test cord between the ECM and wire harness as shown in figure, then turn ignition switch “ON”.
3) Connect the tester probe (“–”, Black) to the starter motor magnetic switch terminal “B” (connected to battery positive (+) terminal) as shown in figure.
4) Connect the tester probe (“+”, Red) to each terminal.

Injector	Terminal	Wire color (Engine harness)
No.1	41	O/B
No.2	43	B/Br
No.3	46	R/W
No.4	39	Lg

5) Crank the engine and measure the voltage.
If out of specification, inspect the related parts as described in “Fuel System Diagnostic Information/Fuel Injection System Troubleshooting”.
Refer to “Fuel System Diagnosis” (Page 1G-14) and “Fuel Injection System Troubleshooting” (Page 1G-15).

Fuel injector operating signal
Standard: Approx. 6 – 10 V or over

Fuel Injector Removal and Installation

CENFH5111706013

Removal

1) Relieve the fuel pressure in the fuel feed line according to “Fuel Pressure Relief Procedure”. Refer to “Fuel Pressure Relief Procedure” (Page 1G-16).
2) Remove the lower side covers. Refer to “Lower Side Cover Removal and Installation” in Section 2A (Page 2A-3).
3) Loosen the three bolts and reomove fuel hose guard (1).

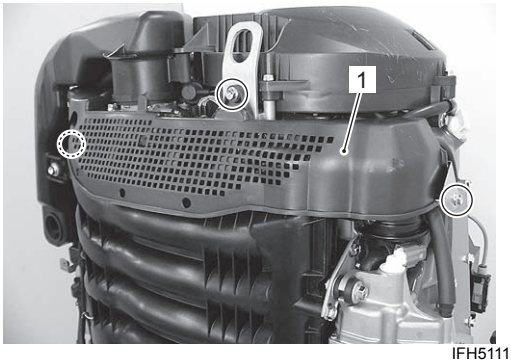

IFH511170045-01

4) Remove the air intake silencer case (2). Refer to “Air Intake Silencer Case Removal and Installation” in Section 1D (Page 1D-2).

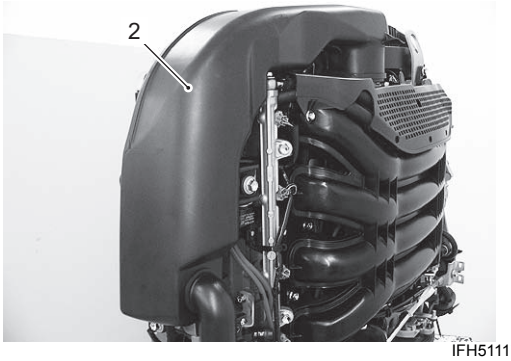

IFH511170047-01

5) Loosen the clamp and place a large cloth over the end of the fuel feed hose (3). Slowly pull the fuel feed hose from the fuel delivery pipe. Drain any excess fuel in the hose into a small container.

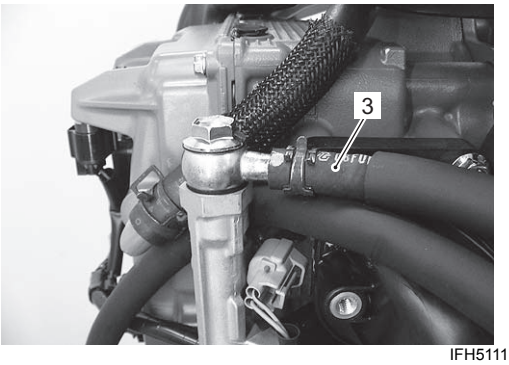

IFH511170022-03

6) Disconnect the four fuel injector connectors (4).
7) Remove two bolts (6) and fuel delivery pipe (5) (with fuel injectors).

⚠ WARNING

Gasoline is a flammable material that can cause fire hazard or burns.

A small amount of fuel may be released when the fuel injector is removed from delivery pipe.
Place a shop cloth under fuel injector before removal to absorb any fuel released.
Dispose of fuel soaked cloth in appropriate container.

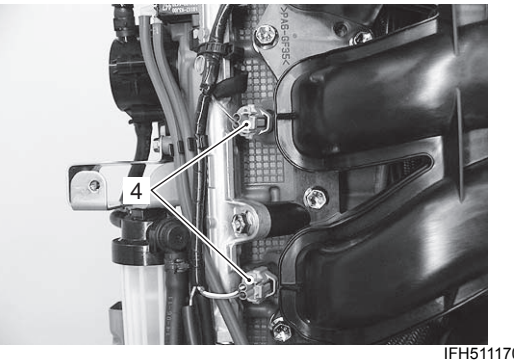

IFH511170023-02

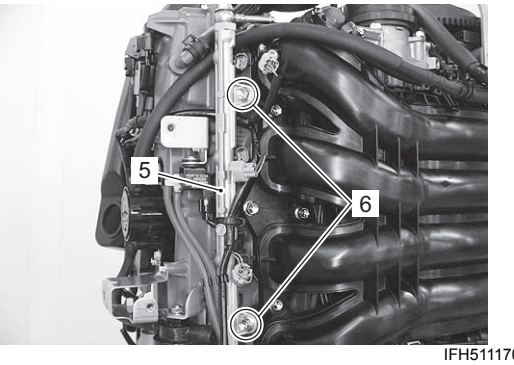

IFH511170048-02

8) Remove each fuel injector (7) from delivery pipe.

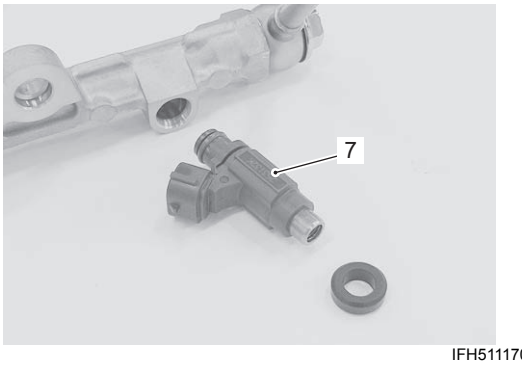

IFH511170024-02

Installation
Installation is reverse order of removal with special attention to the following steps.

⚠ WARNING

Failure to take proper precaution when reinstalling fuel injector can result in fuel leakage or damage.

Do not re-use O-ring and cushion once removed.
Always use new parts.

1) Replace injector O-ring (1) with a new one using care to avoid nicks or cuts during installation.

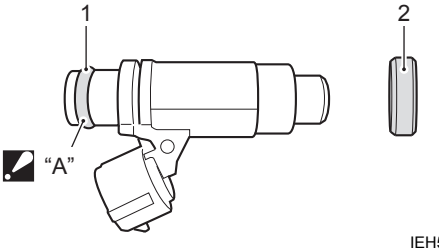

IEH511170057-01

"A": Apply fuel to O-ring

2) Replace the cushion (2) with a new one and install to the cylinder head.
3) Apply a thin coat of fuel to injector O-rings, then install the injectors into the delivery pipe (3) and cylinder head.
Make sure that the injectors rotate smoothly.

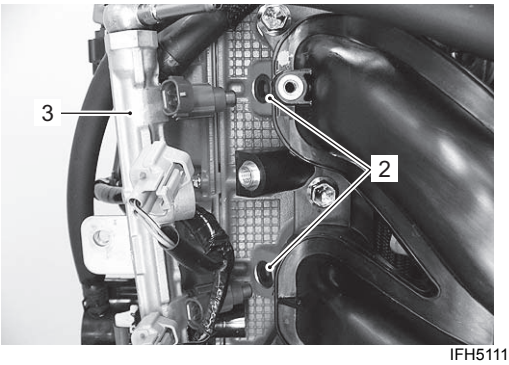

IFH511170049-01

4) Tighten delivery pipe bolts and make sure that injectors rotate smoothly.

Tightening torque
Fuel delivery pipe bolt (a): 23 N·m (2.3 kgf-m, 16.5 lbf-ft)

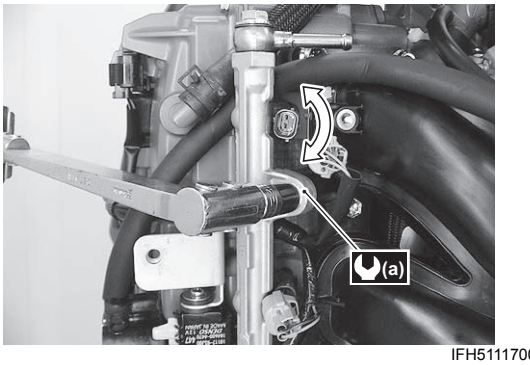

IFH511170050-02

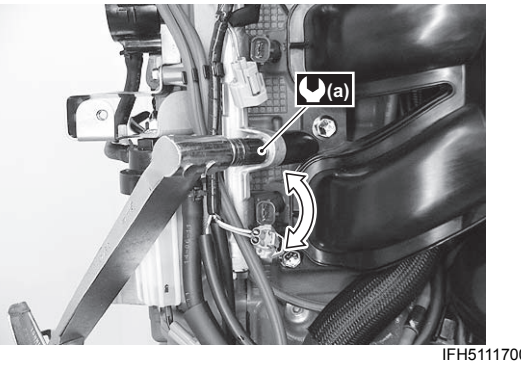

IFH511170051-02

5) Reconnect the fuel feed hose and fuel line securely.

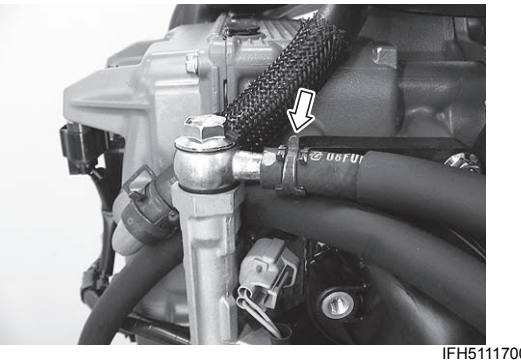

IFH511170052-01

6) Connect the lead wire connector to the injectors securely.
7) Make sure the emergency stop switch lock plate is in place.
Shift into neutral position.
8) Squeeze the fuel primer bulb until you feel resistance.
Turn ignition switch "ON" for 3 seconds (to operate fuel pump), then turn it "OFF". Repeat this (ON and OFF) procedure 3 or 4 times to pressurize fuel system.
Check for fuel leaks around fuel injectors.
9) Check to ensure that all removed parts are back in place.

Low Pressure Fuel Pump Removal and Installation

CENFH5111706014

NOTICE

Disassembling the low pressure fuel pump can lead to troubles.

The low pressure fuel pump is a nonrepairable component.
Do not attempt to disassemble the low pressure fuel pump.
It must be replaced as a complete unit if it is defective.

Removal

1) Remove the lower side covers.
   Refer to “Lower Side Cover Removal and Installation” in Section 2A (Page 2A-3).
2) Remove the resonator and air intake silencer case (1).
   Refer to “Air Intake Silencer Case Removal and Installation” in Section 1D (Page 1D-2).

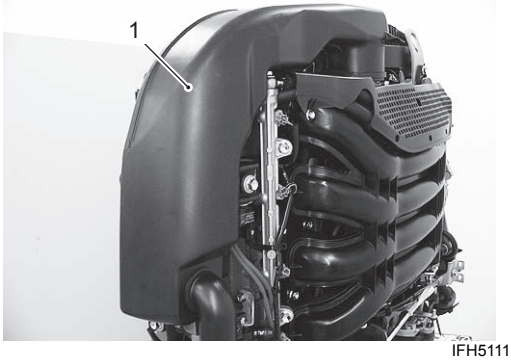

IFH511170053-01

3) Disconnect the fuel inlet hose (2) and outlet hose (3) from low pressure fuel pump (4).
4) Remove two bolts (5) securing fuel pump.

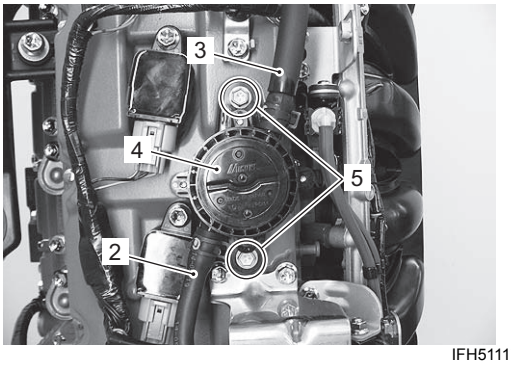

IFH511170054-01

5) Remove the low pressure fuel pump (4).
   Note the position before removing O-ring (6).

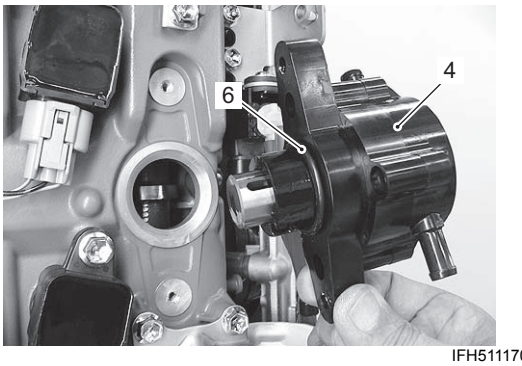

IFH511170056-01

Installation

Installation is in the reverse order of removal with special attention to the following steps.

NOTICE

- **Before installing the low pressure fuel pump, rotate the crankshaft to bring the No.1 (top cylinder) piston to Top Dead Center on the compression stroke.**
- **Do not reuse O-ring once removed. Always use a new O-ring.**

- Apply thread lock to the low pressure fuel pump bolts.

  1342 : Thread lock cement 99000–32050 (SUZUKI Thread Lock 1342 (50 g))

- Install the low pressure fuel pump, then tighten bolts securely.

  Tightening torque
  Low pressure fuel pump bolt (a): 10 N·m (1.0 kgf-m, 7.0 lbf-ft)

- Connect the fuel inlet and outlet hoses.

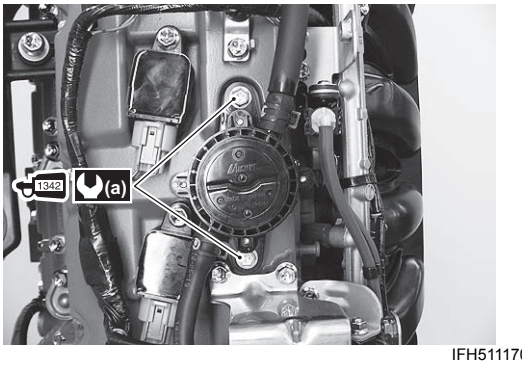

IFH511170055-01

- Reinstall parts removed earlier.

Low Pressure Fuel Pump Inspection

CENFH5111706015

NOTICE

Disassembling the low pressure fuel pump can lead to troubles.

The low pressure fuel pump is a nonrepairable component.
Do not attempt to disassemble the low pressure fuel pump.
It must be replaced as a complete unit if it is defective.

Low Pressure Fuel Pump

Inspect the low pressure fuel pump.
If leakage, cracks, damage or other abnormal condition is found, replace fuel pump assembly.

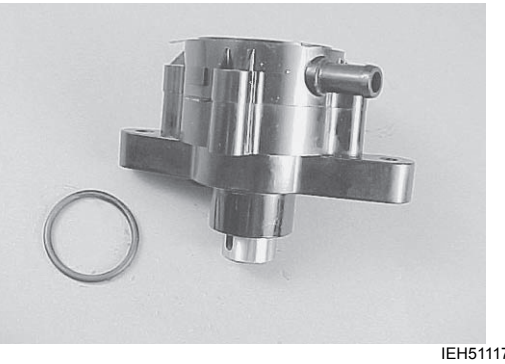

IEH511170064-02

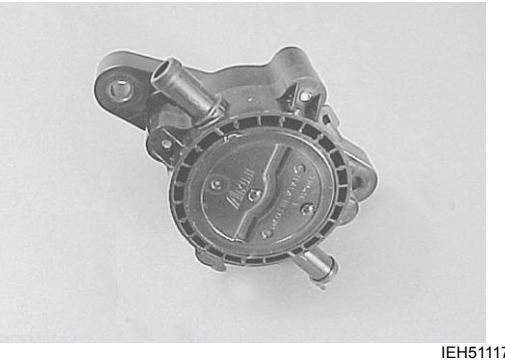

IEH511170065-02

Low Pressure Fuel Line Components

CENFH5111706016

When disassembling or reassembling fuel line, refer to the construction diagram below.

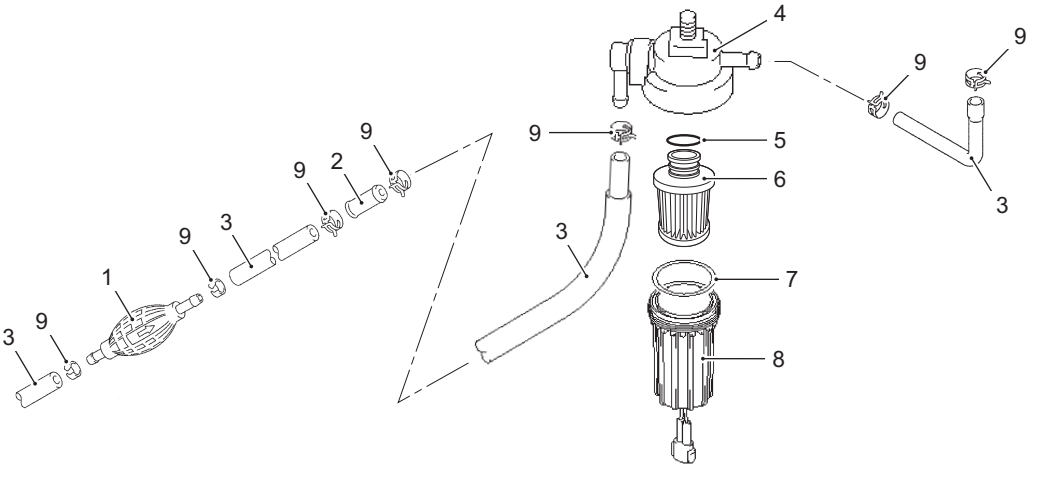

IFH511170059-01

1. Primer bulb	4. Low pressure fuel filter body	7. O-ring
2. Fuel connector	5. Seal ring	8. Low pressure fuel filter cup/water detection switch
3. Fuel hose	6. Filter element	9. Clip

Low Pressure Fuel Filter / Fuel Hose Inspection

CENFH5111706017

Fuel Connector

Inspect fuel connector for leakage, deterioration or other damage. Replace if necessary.



IEH511170067-01

Fuel Hose

Inspect fuel hose for cuts, cracks, leakage, tears or deterioration. Replace if necessary.

Fuel Primer Bulb

Inspect fuel primer bulb for cracks, leakage, deterioration or check valve function.
Replace if necessary.

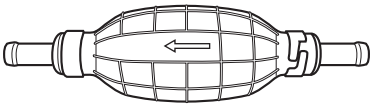

IEH511170068-01

Low Pressure Fuel Filter

Inspect low pressure fuel filter (1).
Refer to“Low Pressure Fuel Filter Inspection” in Section 0B (Page 0B-18).

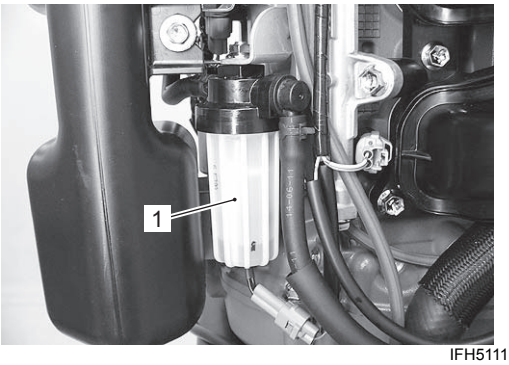

IFH511170057-01

High Pressure Fuel Filter Removal and Installation

CENFH5111706018

Removal

⚠ WARNING

Gasoline is a flammable material that can cause fire hazard or burns.

Before starting the following procedure, be sure to observe “Precautions on Fuel System Service” (Page 1G-1) in order to reduce the risk or fire and personal injury.

1) Relieve the fuel pressure in the fuel feed line. Refer to “Fuel Pressure Relief Procedure” (Page 1G-16).
2) Loosen the three bolts and remove the fuel hose guard (1).

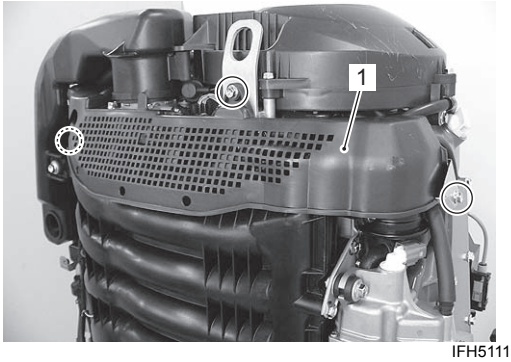

IFH511170058-01

3) Remove the two bolts securing high pressure fuel filter (2).
4) Remove the hose clip (3).
5) Loosen the clamp and place a large cloth over end of fuel feed hose (4).
Slowly pull fuel feed hose (4) from high pressure fuel filter.

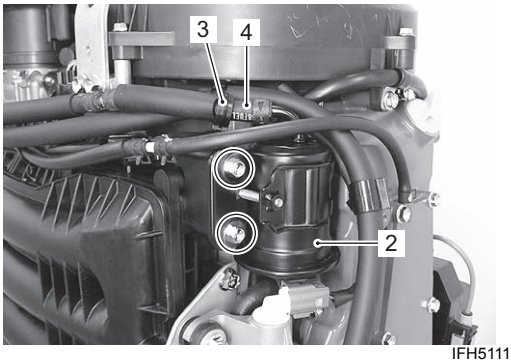

IFH511170026-03

6) Loosen the clamp and place a large cloth over end of fuel hose (5), then disconnect fuel hose (5) from high pressure fuel filter.
Drain any excess fuel in filter into a small container.

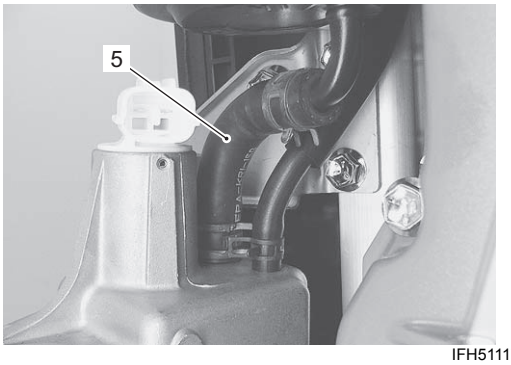

IFH511170060-01

Installation
Installation is reverse order of removal with special attention to the following steps.

- Check fuel hose routing.
  Refer to “Fuel Hose Routing” in Section 4B (Page 4B-1).
- Check for fuel leakage.
  Refer to “Fuel Leakage Check Procedure” (Page 1G-17).

Water Detection Switch Inspection

CENFH5111706019

Inspect the water detection switch using the following procedures.

1) Remove the low pressure fuel filter.
   Remove filter cup.
   Refer to “Low Pressure Fuel Filter Inspection” in Section 0B (Page 0B-18).
2) Connect the tester probes to the lead wire terminals as shown.
3) Check if continuity/infinity can be measured by moving float, checking each position.
   If out of specification, replace the switch (fuel filter case) with a new one.

Special tool
TOOL (A): 09900–25008 (Multi circuit tester set)

Tester knob indication
Continuity(•)))

Float position	Tester indication
Raise the float fully up	Continuity
Lower the float completely.	Infinity

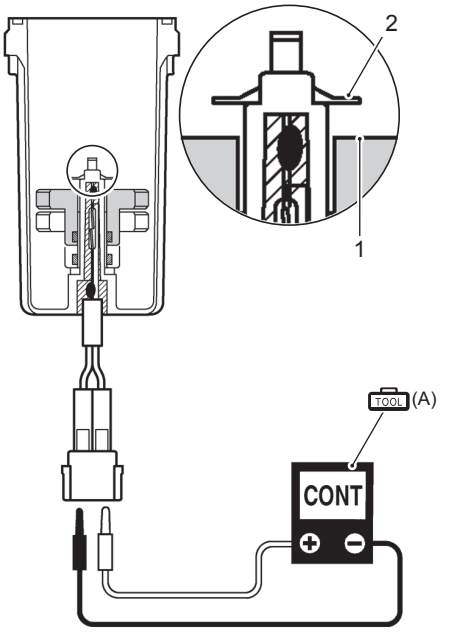

IDG211170066-02

1. Float	2. Stopper

4) Assemble and re-install the fuel filter.
   Refer to “Low Pressure Fuel Filter Inspection” in Section 0B (Page 0B-18).

Ignition System

General Description

Ignition System Description

CENFH5111801001

The ignition system used by DF200A is a fully transistorized, electronic microcomputer timing advanced type.
This system is totally battery powered, with the ECM controlling all ignition timing functions.
The ignition system is composed of the ignition coil, spark plug and components for system control (ECM, sensor, switch etc.).
When the ignition switch is “ON”, battery voltage (12 V) is applied to the circuit as shown in the illustration.
The ECM determines the optimum ignition timing and duration of current flowing through the ignition coil primary winding based on the signals received from various sensors.
The ECM interrupts the base current of the power transistor inside the ignition coil thereby controlling current flow (ignition) to the primary winding of ignition coil.
In this way, a mutual induction high voltage occurs in the ignition coil secondary side and spark is generated.

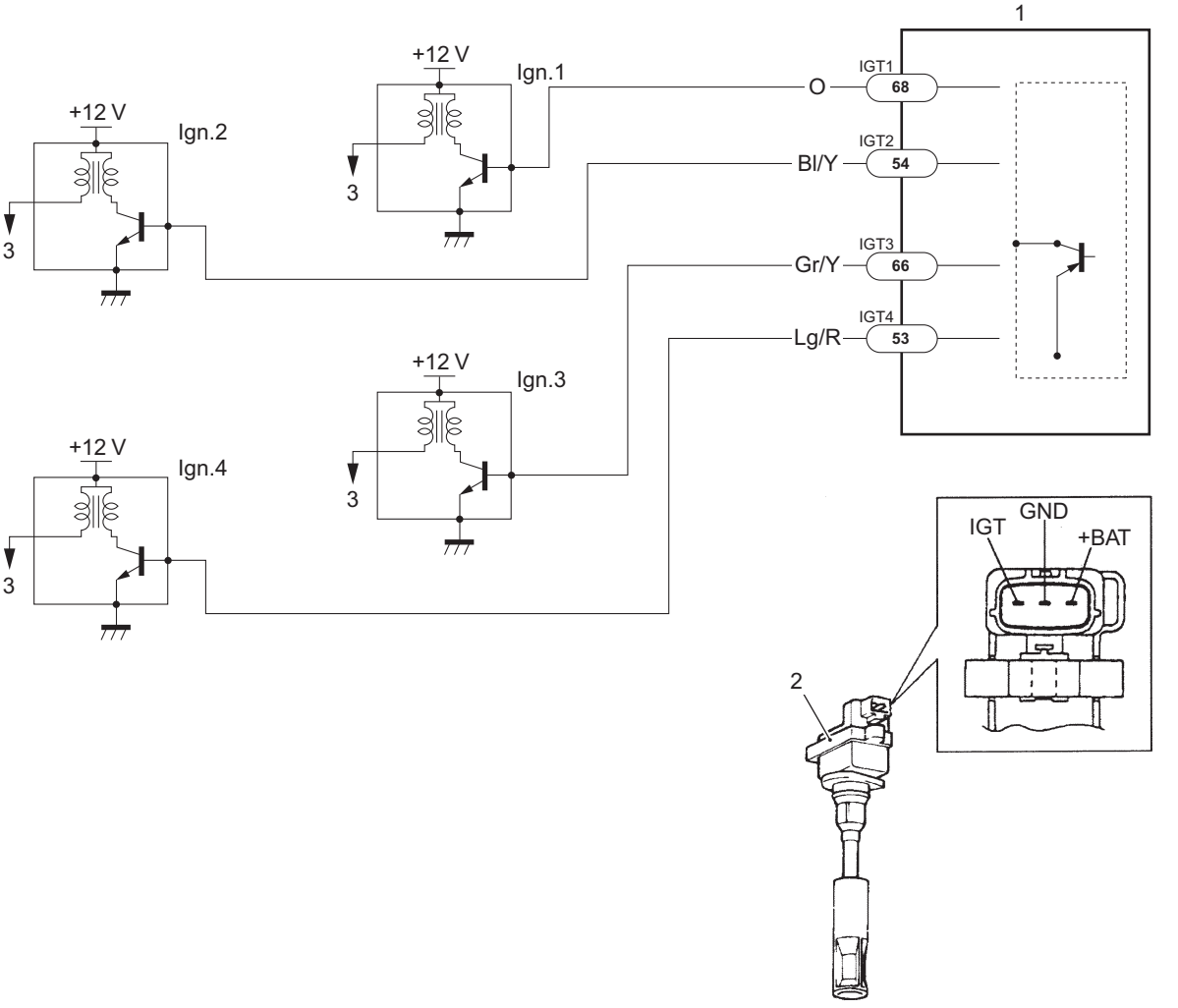

IFH511180001-02

1. ECM	2. Ignition coil	3. Spark plug

Ignition Control Description

CENFH5111801002

Sensors at specific points on the engine monitor current engine conditions and send signals to the ECM.
Based on these signals, the ECM determines the optimum ignition timing and releases voltage to the ignition coils.

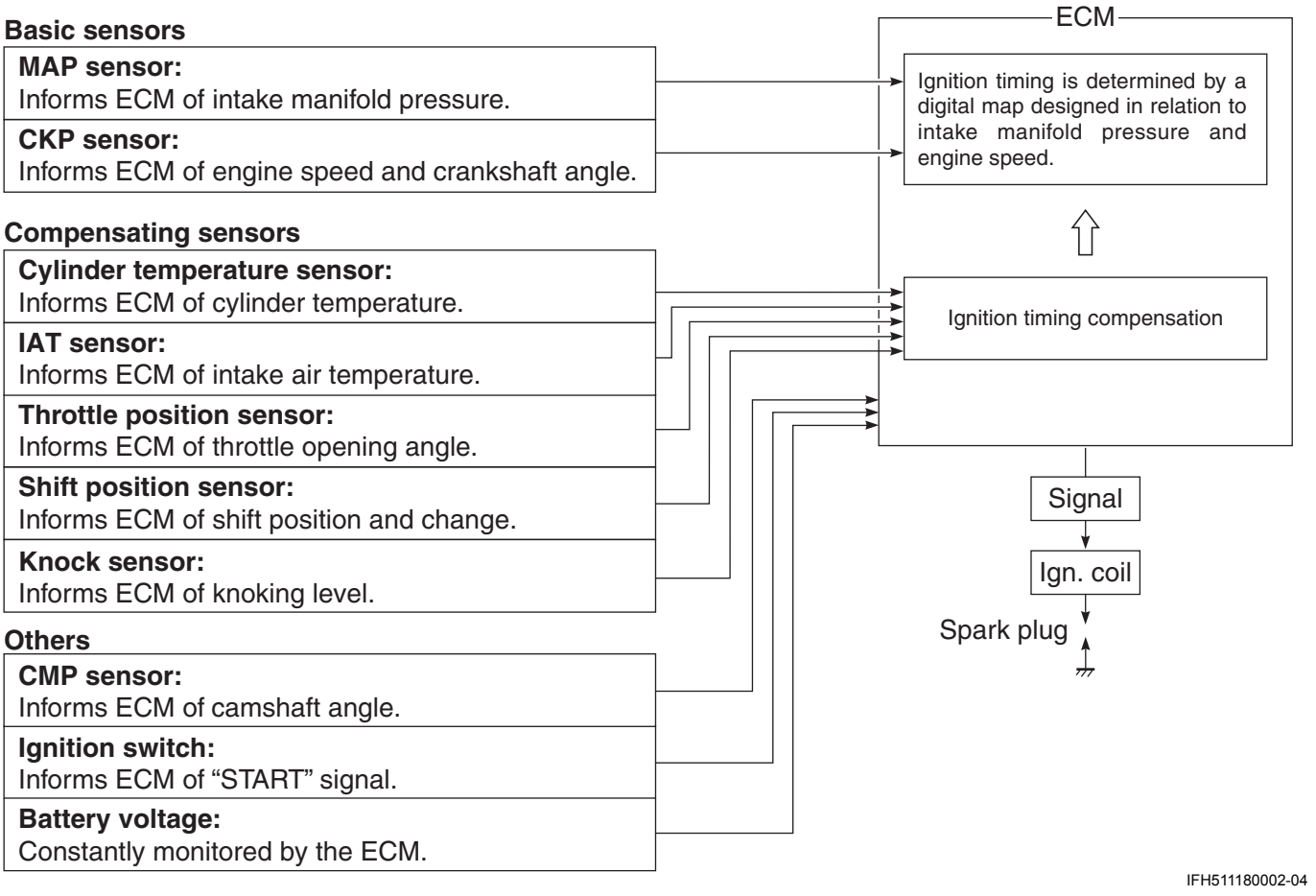

IFH511180002-04

Ignition Specification

Ignition system	Full-transistorized ignition
Advance	Electronic microcomputer control
Ignition timing	0° ± 6° BTDC – 26° BTDC
Firing order	1 — 3 — 4 — 2

Ignition Timing Chart

The following chart is an example for ignition at 10° BTDC.

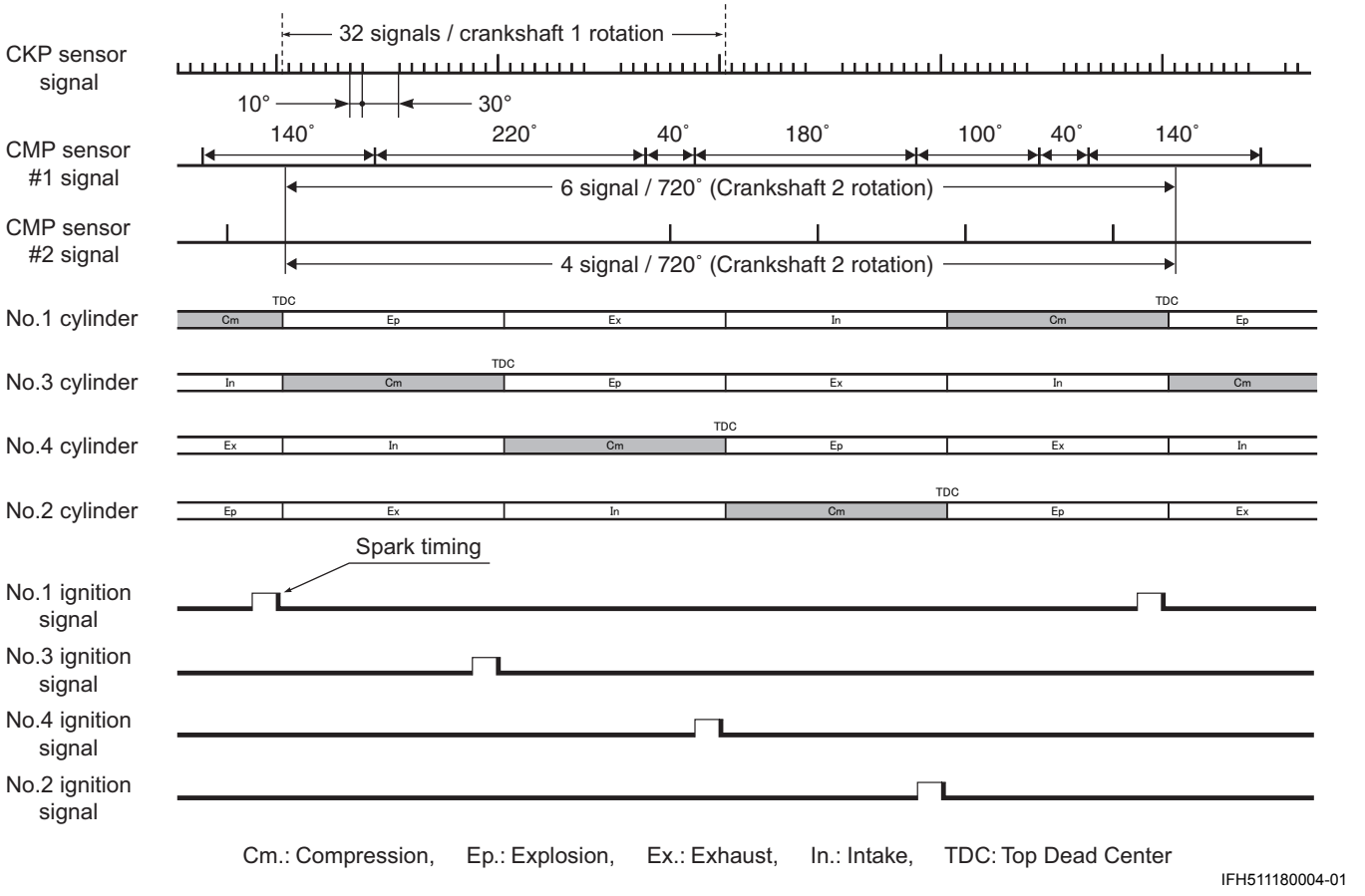

Cm.: Compression, Ep.: Explosion, Ex.: Exhaust, In.: Intake, TDC: Top Dead Center

IFH511180004-01

Control Mode

- **When cranking**
  The ignition timing is fixed at 5° BTDC until the engine starts.
- **When idling/trolling**
  The ignition timing is controlled within the range of 0° ± 6° BTDC to provide stable engine operation at the specified idling/trolling speed.
- **When running (normal operation)**
  The ignition timing ranges between 0° BTDC – 26° BTDC, depending on current engine operating conditions.
- **Knock control compensation**
  This compensation is added when knocking is detected so as to recover from knocking state immediately.

Component Location

Ignition System Components Location

CENFH5111803001

Refer to “Wiring Harness Routing Diagram” in Section 4A (Page 4A-2).

Diagnostic Information and Procedures

Ignition System Symptom Diagnosis

CENFH5111804001

Condition	Possible cause	Correction / Reference Item
Engine cranks, but will not start or weak spark. (No spark)	Blown fuse for ignition system.	*Replace.*
	Loose connection or disconnection of lead wire.	*Connect securely.*
	Faulty spark plug(s).	*Replace.*
	Faulty ignition coil.	*Replace.*
	Faulty CKP sensor.	*Replace.*
	Faulty CMP sensor or sensor trigger vane of camshaft.	*Replace.*
	Faulty ECM.	*Replace.*
Spark plug is wet or quickly becomes fouled with carbon.	Incorrect gasoline.	*Change.*
	Incorrect spark plug.	*Replace.*
Spark plug quickly become fouled with oil or carbon.	Worn piston ring.	*Replace.*
	Worn piston.	*Replace.*
	Worn cylinder.	*Replace.*
	Excessive valve stem to valve guide clearance.	*Replace.*
	Worn valve stem seal.	*Replace.*
Spark plug electrodes overheat or burn.	Incorrect spark plug.	*Change.*
	Overheated engine.	*Tune-up.*
	Loose spark plug.	*Tighten.*

Ignition System Troubleshooting

CENFH5111804002

Before starting the troubleshooting, make sure that:

- There is not self-diagnostic code indication.
- Emergency stop switch plate is set in place.

Perform the following ignition system tests when the engine is hard to start in order to determine if the cause is in the ignition or another system.

Step 1

Check the ignition system connector for poor connections. Is there connection in the ignition system connectors?

Yes — Go to step 2.

No — Poor connection of connectors.

Step 2

Check spark condition.

Yes — Go to step 3.

No — No or weak sparks.

Step 3

Check if the spark plugs are in good condition.

Yes — Go to step 4.

No — Replace spark plug with a new one.

Step 4

Check ignition coil assembly power supply and ground circuits for open and short. Are circuits in good condition?

Yes — Go to step 5.

No — Repair or replace.

Step 5

Check ignition coil operating signal. Is result OK?

Yes — Go to step 6.

No — Check ignition coil operating signal wire for open, short and poor connection.

Step 6

Measure the battery voltage between input lead wire at ECM with the ignition switch in "ON" position. Is result OK?

Yes — Go to step 7.

No
- Faulty ignition switch.
- Faulty ECM main relay.
- Broken wire harness or poor connection of related circuit connector.

Step 7

Check CKP sensor. Refer to "CKP Sensor Inspection" in Section 1C (Page 1C-11). Is result OK?

Yes — Go to step 8.

No
- Check air gap between CKP sensor and flywheel reluctor bars.
- Adjust CKP sensor air gap.
- Replace CKP sensor or flywheel.

Step 8

Check CMP sensor. Refer to "CMP Sensor Inspection" in Section 1C (Page 1C-12). Is result OK?

Yes — Go to step 9.

No
- Check CMP sensor.
- Check CMP sensor trigger vane.
- Replace CMP sensor or Ex. camshaft.

Step 9

Substitute a known-good ignition coil assembly then repeat step 2. Is check result of step 2 satisfactory?

Yes — Go to step 10.

No — Substitute a known good ECM, then repeat step 2.

Step 10

Check the ignition timing by using timing light (Approx. 4° BTDC at 1 000 r/min). Is result OK?

Yes — System is in good condition.

No — Check input signals related to this system.

Service Instructions

Spark Plug Removal and Installation

CENFH5111806001

Refer to “Spark Plug Removal and Installation” in Section 0B (Page 0B-7).

Spark Plug Inspection

CENFH5111806002

Refer to “Spark Plug Inspection and Cleaning” in Section 0B (Page 0B-8).

Ignition Coil Removal and Installation

CENFH5111806003

Removal

1) Disconnect the battery cables from the battery.
2) Disconnect the ignition coil connector (1).
3) Remove the bolt (2) securing the ignition coil, then pull out the ignition coil (3).

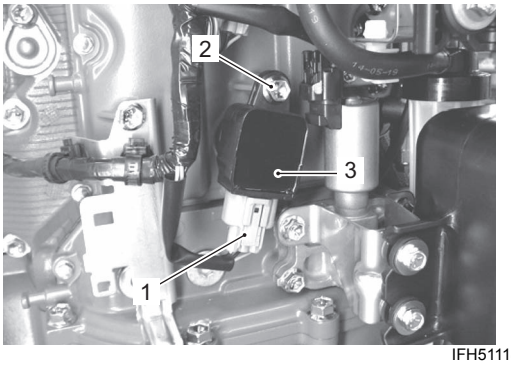

IFH511180005-02

Installation

1) Install the ignition coil, then secure the ignition coil with its mounting bolt.
2) Connect the ignition coil connector.
3) Connect the battery cables to battery.

Ignition Coil Inspection

CENFH5111806004

NOTE

The ignition coil power transistor and high tension lead are an integral part of the coils internal circuit. Using resistance measurements to check for a defect on either the primary or secondary coil is not possible.

Special tool

TOOL (A): 09900–25008 (Multi circuit tester set)

Tester knob indication

DCV

1) Turn the ignition switch OFF.
2) Disconnect the ignition coil connector.
3) Check for continuity between the GND (–) terminal on the wiring harness side connector and the engine body ground.
4) Turn the ignition switch key to the ON position. Check for battery voltage by measuring between the BAT (+) terminal and GND terminal on the wiring harness side connector.
5) Connect the wiring harness connector to the ignition coil and measure the ignition operating signal. Refer to “Ignition Coil Operating Signal Inspection” (Page 1H-7).
   - If any failure exists, check for open circuit, short circuited battery, short circuited lead and connector’s contact condition for each circuit.
   - If there is no spark even with the wiring harness and spark plug in sound condition, perform the inspection again using an ignition coil that is known to be in good condition (new or used from another cylinder that is operating properly).
   - If there is still no spark even with the wiring harness, spark plug and ignition coil in sound condition, replace the ECM and perform the inspection again.

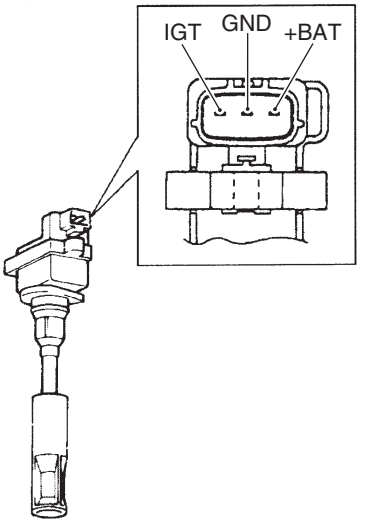

I9J011180004-03

Ignition Coil Operating Signal Inspection

CENFH5111806005

Special tool
TOOL (A): 09930–88730 (36-pin test cord set)
CD-77 : Stevens peak reading voltmeter CD-77

Tester knob indication
SEN 50

1) Disconnect all injector connectors from the fuel injectors.
2) Connect test cords between ECM and wire harness as shown in figure, then turn ignition switch ON.

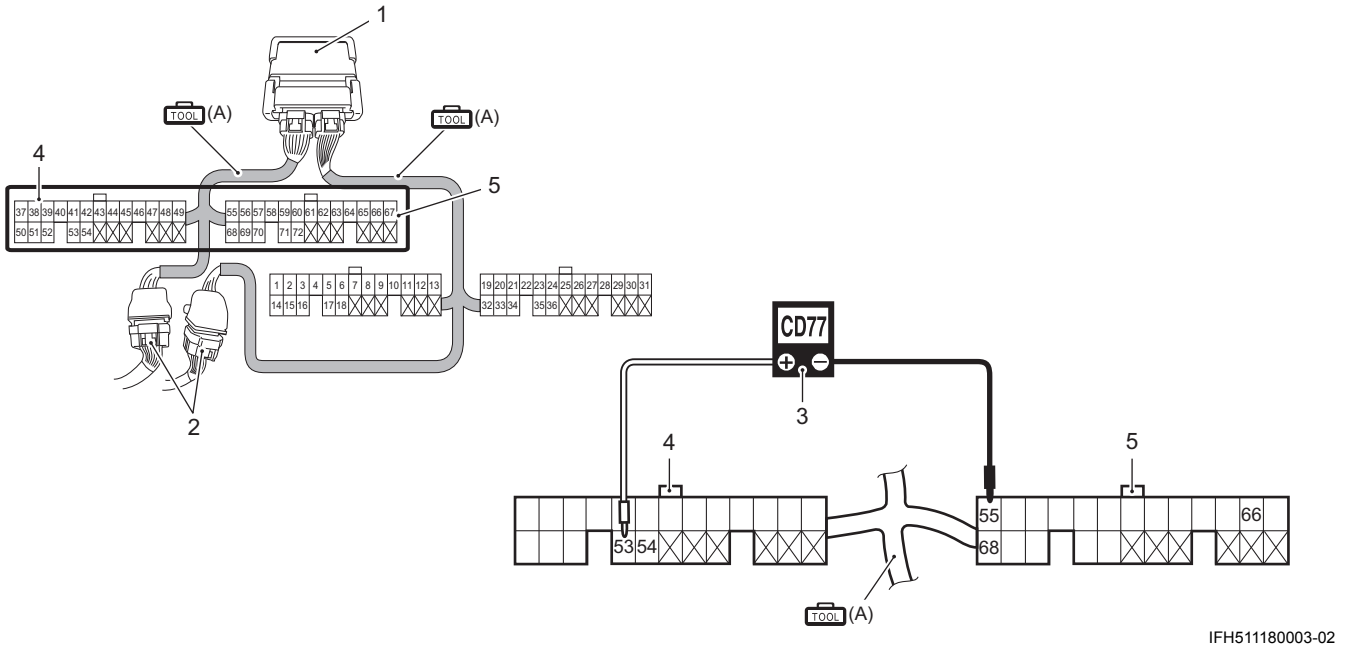

IFH511180003-02

1. ECM	3. Stevens peak reading voltmeter CD-77	5. Black connector
2. Wire harness	4. White connector	

3) Connect the tester probe (“+”, Red) to each terminal.

Ignition coil	Terminal	Wire color (engine harness)
No.1	68	O
No.2	54	Bl/Y
No.3	66	Gr/Y
No.4	53	Lg/R

4) Connect the tester probe (“–” Black) to No.55 terminal (or to body ground).
5) Crank engine and measure voltage.
If out of specification, inspect the related parts.
Refer to “Ignition System Symptom Diagnosis” (Page 1H-4) and “Ignition System Troubleshooting” (Page 1H-5).

Ignition coil operating signal
Standard: Approx. 5 V

CKP Sensor Inspection

CENFH5111806006

Refer to “CKP Sensor Inspection” in Section 1C (Page 1C-11).

CMP Sensor Inspection

CENFH5111806007

Refer to “CMP Sensor Inspection” in Section 1C (Page 1C-12).

Ignition Switch Inspection

CENFH5111806008

Refer to “Ignition Switch Inspection” in Section 1I (Page 1I-13).

ECM Main Relay Inspection

CENFH5111806009

Refer to “ECM Main Relay Inspection” in Section 1A (Page 1A-50).

Starting System

General Description

Electric Starter System Description

CENFH5111901001

The starting circuit consists of the battery, starting motor, ignition switch, neutral switch, starter relay, ECM and related electrical wiring.
These components are connected electrically as shown in the figure below.
In the circuit shown in the figure below, the magnetic switch coils and starter relay coil are magnetized when the ignition switch is closed (turned to “START”).
The resulting plunger and pinion shift lever movement causes the pinion to engage the engine flywheel gear, the magnetic switch main contacts to close, and engine cranking to take place.
When the engine starts, the pinion over-running clutch protects the armature from excessive speed until the switch is opened, at which time the torsion spring causes the pinion to disengage.

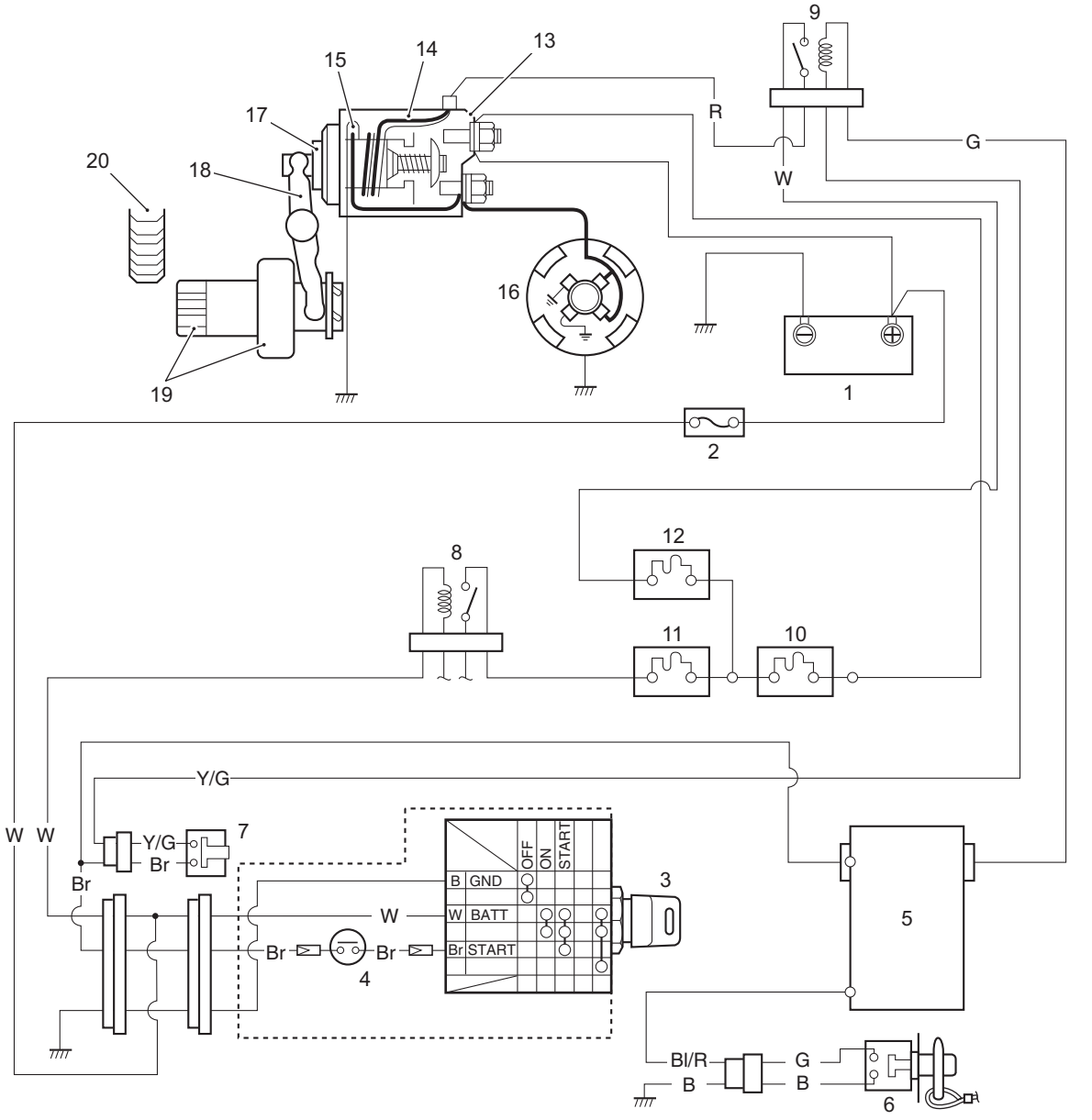

IFH511190001-03

1. Battery	6. Emergency stop switch	11. Fuse (30 A)	16. Starter motor
2. Fuse (15 A)	7. Neutral switch (engine side)	12. Fuse (30 A)	17. Plunger
3. Ignition switch	8. Main relay	13. Magnetic switch	18. Shift lever
4. Neutral switch (remote control box side)	9. Starter relay	14. Pull-in coil	19. Pinion & over-running clutch
5. ECM	10. Fuse (60 A)	15. Hold-in coil	20. Ring gear

Starter Motor Operation Condition Description

CENFH5111901002

The starter motor relay is controlled by the ECM.

- The starter motor relay will only engage when the ignition switch is turned to the “START” position if the all of the following conditions are satisfied.
  - Lock plate is attached to emergency stop switch.
  - Neutral switch is in the “ON” position.
  - Engine is not already operating.
- After returning the ignition key to the “ON” position from “START”, the starter motor continues to run for 4 seconds until engine starts.

NOTE

The continuous operating time of the starter motor is set at five seconds.
When this time is exceeded, the starter motor will automatically stop.
If the motor stops, wait about ten seconds for the motor to cool down and try again.

NOTE

If a failure exists in the sub-battery cable or the 15 amp. fuse in its circuit, the starter motor relay circuit will not function.

Start-In-Gear Protection System Description

CENFH5111901003

To avoid accidental movement of the boat at the time of engine starting, the system prohibits starter motor operation when the shift lever is “IN” gear.

Control by Neutral Switch

A switch to detect “Neutral” gear position is located on the clutch lever holder and operated by the clutch control lever.
This ON/OFF type switch is ON in “Neutral” and OFF in “Forward” or “Reverse”.
When attempting to start the engine, the ECM detects the shift position using the neutral switch.
When the neutral switch is OFF, the ECM does not provide a starter motor relay operating signal.

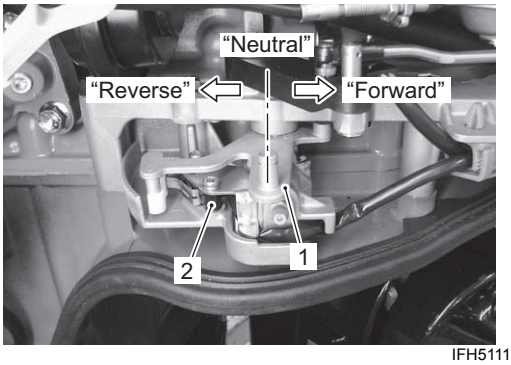

IFH511190006-01

1. Clutch lever	2. Neutral switch

Control by Shift Position Sensor

A shift position sensor is installed on the clutch lever holder and detects the shift position as the clutch lever is interlocked with the SPS shaft.
This sensor is a variable resistor that changes resistance in accordance with the shift position.
The resistance changes (increase / decrease) the voltage signal output from the sensor to the ECM. Based on the sensor voltage, the ECM calculates and detects shift position.
When attempting to start the engine, the ECM does not provide an injector operating signal when a shift lever in-gear position is detected.

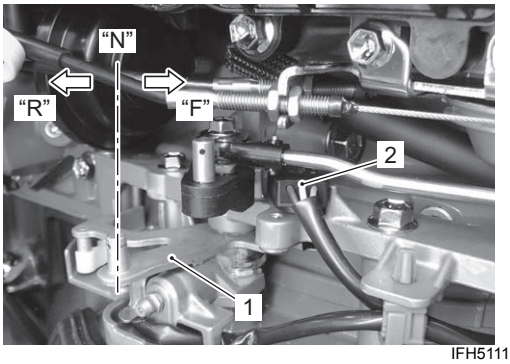

IFH511190007-03

1. Clutch lever	“F”: Forward
2. Shift position sensor	“R”: Reverse
“N”: Neutral	

Operation by neutral switch on engine starting

Shift position	Operation			
	Fuel injection	Ignition	High pressure fuel pump	Starter motor
Neutral	Yes	Yes	Yes	Yes
Forward / Reverse	No (*1:Yes)	No (*1:Yes)	Yes	No

*1: If it is in neutral judged by the ECM according to the shift position sensor signal.

Operation by shift position sensor on engine starting

Shift position	Operation			
	Fuel injection	Ignition	High pressure fuel pump	Starter motor
Neutral	Yes	Yes	Yes	Yes
Forward / Reverse	No (*2:Yes)	No (*2:Yes)	Yes	Yes

*2: If it is in neutral judged by the ECM according to ON signal from the neutral switch.

Component Location

Starting System Components Location

CENFH5111903001

Refer to “Wiring Harness Routing Diagram” in Section 4A (Page 4A-2).

Diagnostic Information and Procedures

Starter System Troubleshooting

CENFH5111904001

⚠ CAUTION

Failure to take proper precaution when starter system troubleshooting may result in personal injury and/or damage to electronic components.

If any abnormality is found, immediately disconnect the battery cables from the battery.

NOTE

Before troubleshooting the electric starter system, make sure of the following:

- **Battery is fully charged.**
- **All cables/wires are securely connected.**
- **Shift is in neutral position.**
- **Emergency stop switch lock plate is set in place.**
- **Fuse is not blown.**

Condition	Possible cause	Correction / Reference Item
Motor not running. (No operating sound of magnetic switch.)	Poor or broken battery connection.	*Replace.*
	Loose or corroded battery connection.	*Repair or retighten.*
	Weak or shorted battery.	*Replace or recharge battery.*
	Poor ground cable connection.	*Tighten ground cable.*
	Defective neutral switch.	*Neutral switch inspection. Replace.*
	Fuse blown.	*Replace.*
	Defective ignition switch.	*Ignition switch inspection. Replace.*
	Open circuit between ignition switch and magnetic switch.	*Repair.*
	Defective emergency stop switch.	*Replace. Emergency stop switch inspection.*
	Lead wire disconnected or loose.	*Retighten.*
	Poor contacting action of ignition switch and magnetic switch.	*Replace. Ignition switch inspection. Magnetic switch inspection.*
	Defective starter motor control relay.	*Main relay and starter motor relay inspection.*
	Poor magnetic switch lead wire connector connection.	*Check connector connection.*
	Open circuit between starter relay and magnetic switch.	*Repair.*
	Defective ECM and its circuit.	*Inspection of ECM and its circuit.*
	Open circuit in pull-in coil.	*Replace magnetic switch. Magnetic switch inspection.*
	Brushes are seating poorly or worn.	*Repair or replace. Brushes inspection.*

Condition	Possible cause	Correction / Reference Item
Motor not running. (Operating sound of magnetic switch heard.)	Weak or shorted battery.	*Replace or recharge battery.*
	Battery voltage too low due to battery deterioration.	*Replace battery.*
	Loose or corroded battery connection.	*Repair or retighten.*
	Burnt main contact point, or poor contacting action of magnetic switch.	*Replace magnetic switch. Magnetic switch inspection.*
	Brushes are seating poorly or worn.	*Replace or repair. Brushes inspection.*
	Weakened brush spring.	*Replace.*
	Burnt commutator.	*Replace armature. Commutator inspection.*
	Shorted or open winding in armature.	*Replace. Armature inspection.*
	Excessive friction in engine.	*Repair.*
Starter motor running but too slow. (Low torque) (If battery and wiring are satisfactory, inspect starting motor.)	Insufficient contact of magnetic switch main contacts.	*Replace magnetic switch. Magnetic switch inspection.*
	Shorted armature.	*Replace. Armature inspection.*
	Dirty or corroded commutator.	*Repair commutator or replace armature. Armature inspection.*
	Worn brushes.	*Replace brushes.*
	Weakened brush spring.	*Replace.*
Starter motor running, but not cranking engine.	Worn pinion tip.	*Replace over-running clutch.*
	Poor sliding of over-running clutch.	*Repair.*
	Over-running clutch slipping.	*Replace over-running clutch.*
	Worn teeth of ring gear.	*Replace flywheel.*
Starter motor does not stop running.	Broken contact point of magnetic switch.	*Replace magnetic switch.*
	Short-circuit magnetic switch coil.	*Replace magnetic switch.*

Service Instructions

Starter Motor Removal and Installation

CENFH5111906001

Removal

NOTICE

If the 12 V electrical system is shorted while servicing the starter motor, the engine electrical circuits could be damaged seriously.

Prior to removing starter motor, disconnect the battery cable at the battery.

1) Remove ring gear cover.
Refer to “Ring Gear Cover Removal and Installation” in Section 1D (Page 1D-2).

2) Remove the nut (1) securing positive (+) battery cable (2) and main harness (R) lead wire from magnetic switch (3) of starter motor.

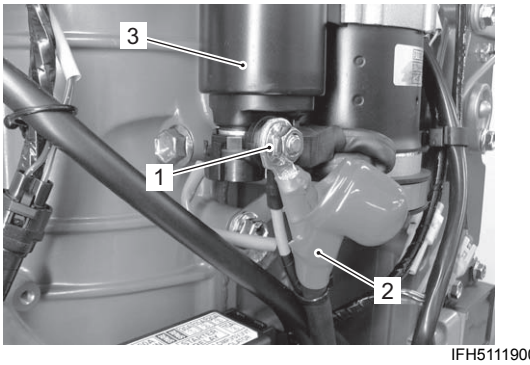

IFH511190008-02

3) Remove two bolts (4), negative (–) battery cable (5), harness GND lead wire and starter motor band (6).

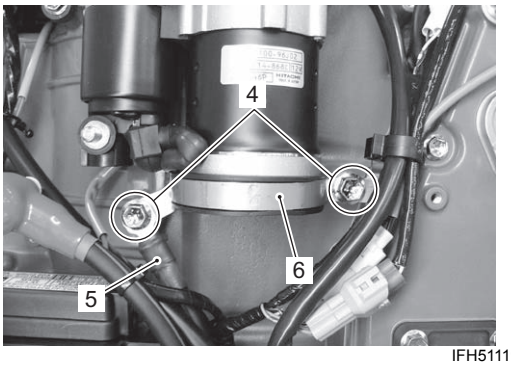

IFH511190009-03

4) Remove two bolts securing starter motor (7).

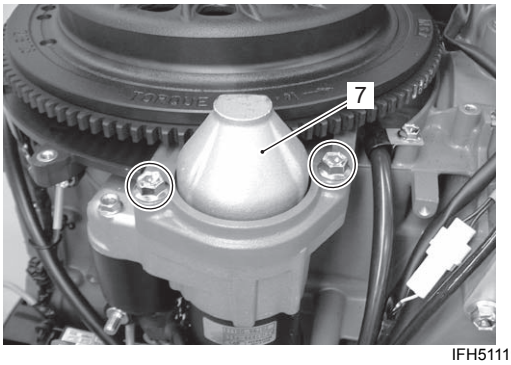

IFH511190010-01

5) Remove the starter motor, then disconnect the red lead wire (8) from "S" terminal of starter motor magnetic switch.

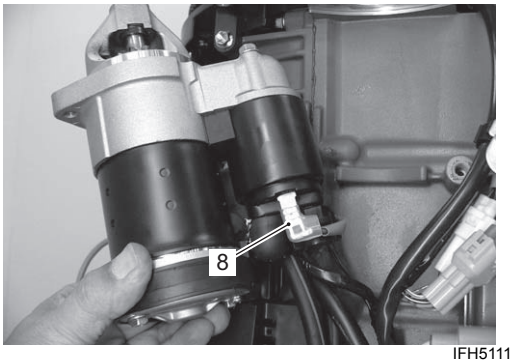

IFH511190011-01

Installation

Installation is reverse order of removal with special attention to the following steps.

- Install starter motor and tighten starter motor mounting bolts securely.

  Tightening torque
  Starter motor mounting bolt (a): 23 N·m (2.3 kgf-m, 16.5 lbf-ft)

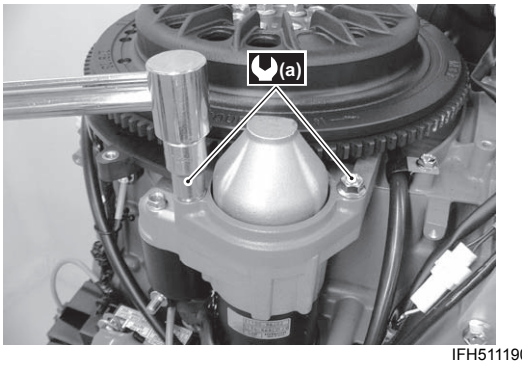

IFH511190012-01

Starter Motor Test

CENFH5111906002

⚠ CAUTION

Sparks resulting from short circuit between the positive (+) and negative (–) terminals during connections to the battery could cause a burn.

Be careful not to short-circuit the positive (+) and negative (–) cables and connect them only to the correct terminals.

⚠ CAUTION

If the cable used for the test is not adequately thick, the cable may become extremely hot due to large current flowing through it and you could get burned.

Be sure to connect the battery and the starting motor with a lead wire of the same size as original equipment.

NOTICE

If battery power is applied too long in any of the following tests, the coil of the magnetic switch may burn.

Each test must be completed within 3 – 5 seconds to avoid burning of the coil.

Pull-In / Hold-In Test

NOTE

Before testing, disconnect the brush lead from terminal “M”.

Connect the battery to the magnetic switch as shown in the figure.

- Check that the plunger and pinion (over-running clutch) move outward.
  If the plunger and pinion don’t move, replace the magnetic switch.

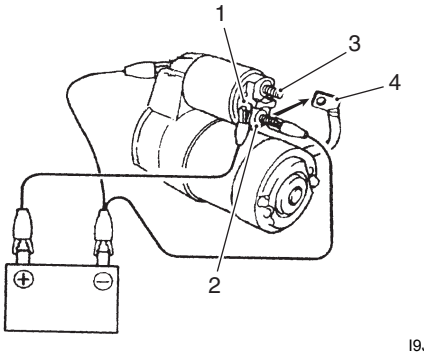

I9J011190002-02

1. Terminal “S”	3. Terminal “B”
2. Terminal “M”	4. Brush lead

- While connected as above with the plunger out, disconnect the negative lead from terminal “M”. Check that the plunger and pinion remain out. If the plunger and pinion return inward, replace the magnetic switch.

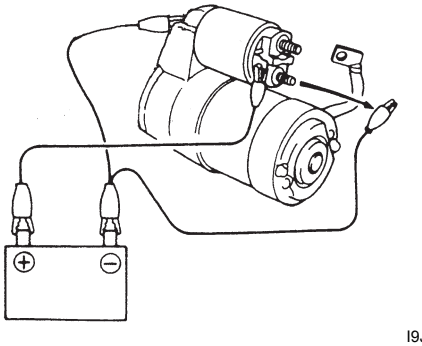

I9J011190003-01

Plunger and Pinion Return Test

Disconnect the negative lead from the switch/motor body.
Check that the plunger and pinion return inward.
If the plunger and pinion don't return inward, replace the magnetic switch.

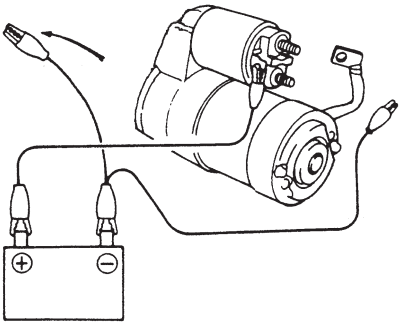

I9J011190004-01

No-Load Performance Test

NOTE

Before performing the following test, secure the starter motor to the test bench.

1) Connect a battery and ammeter to the starter motor as shown.
2) Check that the starter rotates smoothly and steadily with the pinion moving out. Check that the ammeter indicates the specified current.

Specified current (No-load performance test)
Within 90 A at 11 V

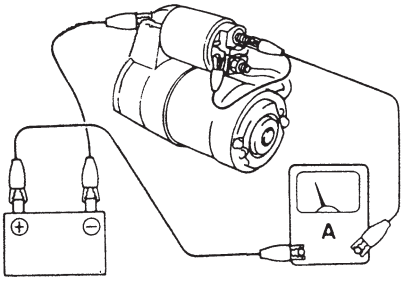

I9J011190005-01

Starter Motor Components

CENFH5111906003

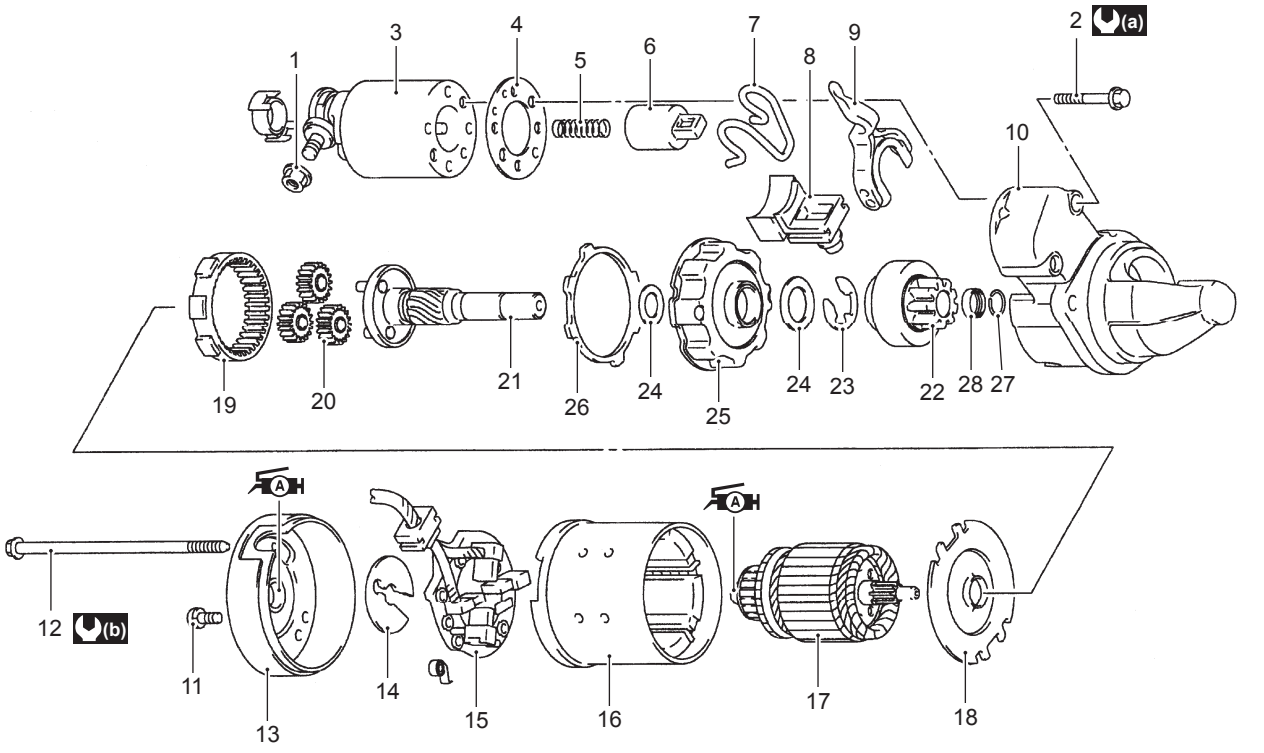

IEH511190007-01

1. Nut	9. Shift lever	17. Armature	25. Center bracket
2. Bolt	10. Front housing	18. Center cover plate	26. Rubber ring
3. Magnetic switch	11. Screw	19. Internal gear	27. Stopper ring
4. Gasket	12. Through bolt	20. Planetary gear	28. Pinion stopper
5. Spring	13. Rear cover	21. Pinion shaft	(a) : 7 N·m (0.7 kgf-m, 5.1 lbf-ft)
6. Plunger	14. Thrust washer	22. Pinion	(b) : 5.5 N·m (0.55 kgf-m, 4.0 lbf-ft)
7. Torsion spring	15. Brush holder	23. E-ring	(A) : Apply grease.
8. Rubber packing	16. Yoke	24. Washer	

Starter Motor Disassembly and Assembly

CENFH5111906004

Disassembly

When overhauling the starting motor, it is recommended that the component parts be cleaned thoroughly. However, the yoke assembly, armature coil, over-running clutch assembly, magnetic switch assembly and rubber or plastic parts should not be washed in a degreasing tank or with a grease dissolving solvent. These parts should be cleaned with compressed air or wiped with clean cloth.

NOTE

Before disassembling the starting motor, be sure to put match marks at three locations (“A”, “B” and “C”) as shown in the figure at right to avoid any possible component alignment mistakes.

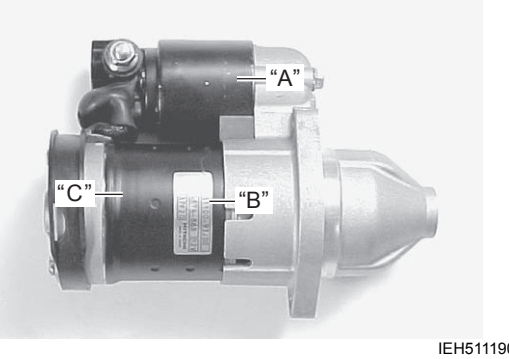

IEH511190008-02

1) Remove nut (1) from the magnetic switch, then disconnect the connecting wire (2).
2) Remove two bolts (3) securing the magnetic switch.

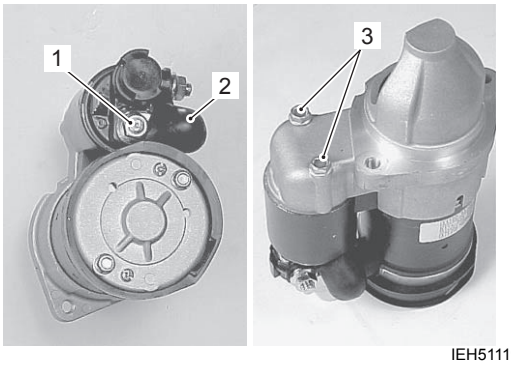

IEH511190009-01

3) Remove the magnetic switch (4).

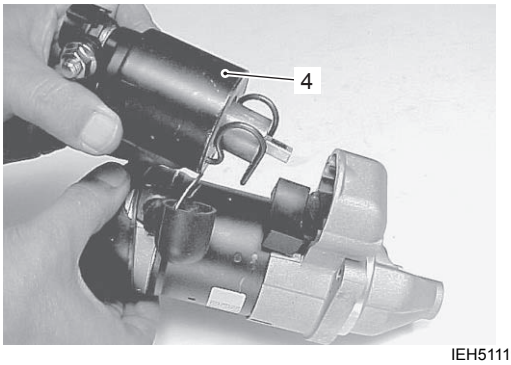

IEH511190010-01

4) Remove screws (5), long through bolts (6) and the rear cover (7).

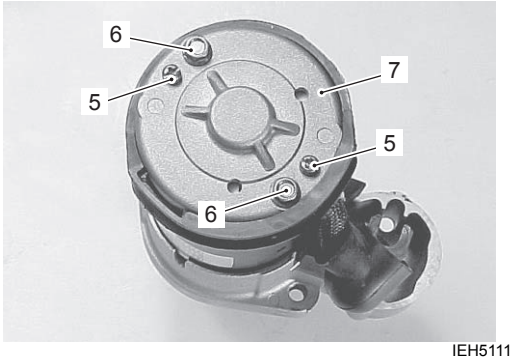

IEH511190011-01

5) Remove thrust washer (8) with a screwdriver.

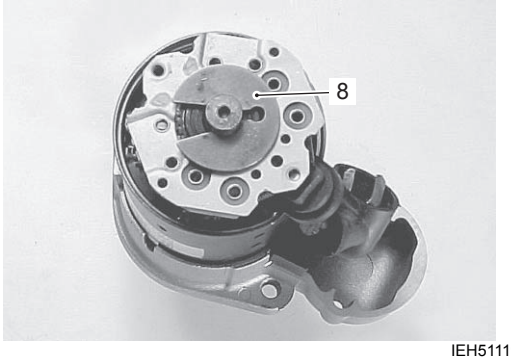

IEH511190012-01

6) Pull the brush spring (9) up to separate the brush from the surface of the commutator, then remove the brush holder (10).

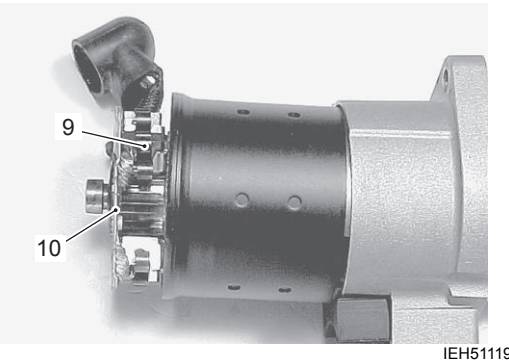

IEH511190013-01

7) Remove the yoke (11) and armature (12).

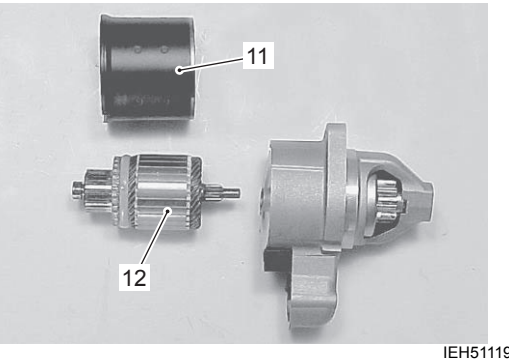

IEH511190014-01

8) Remove the center cover plate (13).
9) Remove the planetary gears (14) and internal gear (15).

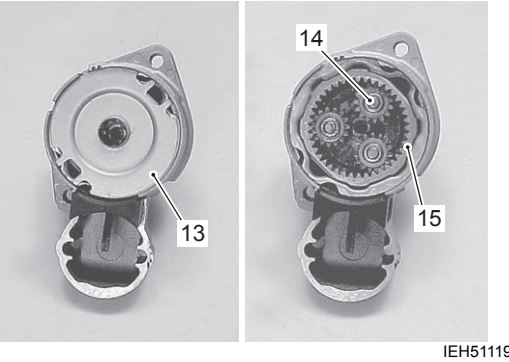

IEH511190015-01

10) Remove the center bracket (16) (with shift lever (18), pinion (19) and pinion shaft (20)) from front housing (17).

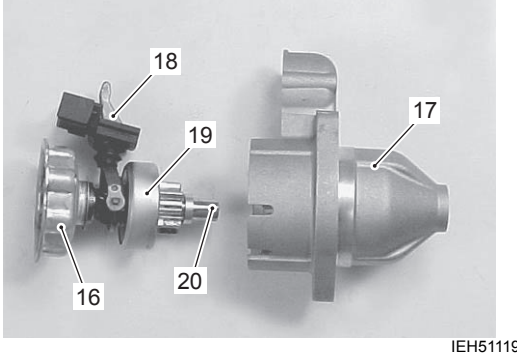

IEH511190016-01

11) Remove the shift lever (18).

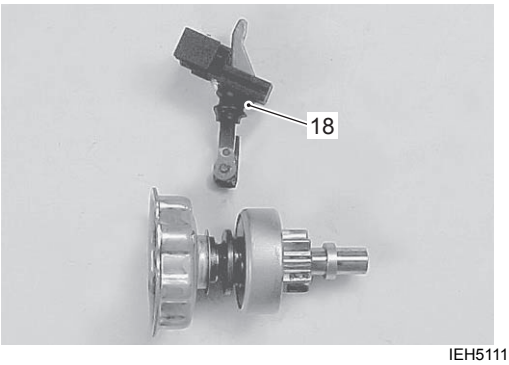

IEH511190017-01

12) Push the pinion stopper (21) down, then remove stopper ring (22).
Remove the pinion stopper and pinion (19).

⚠ WARNING

Failure to take proper precautions when removing stopper ring can cause personal injury.

Wear safety glasses when disassembling and assembling the stopper ring.

NOTE

Using a screw-driver, pry off the stopper ring.

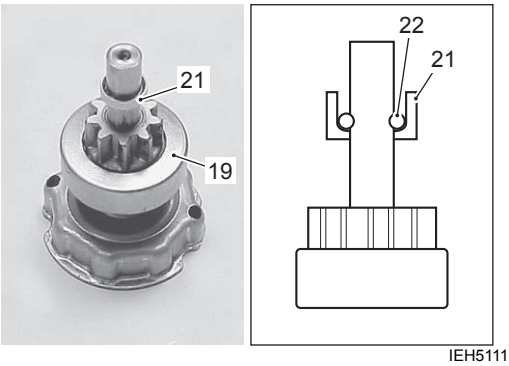

IEH511190018-01

13) Remove the E-ring (23).

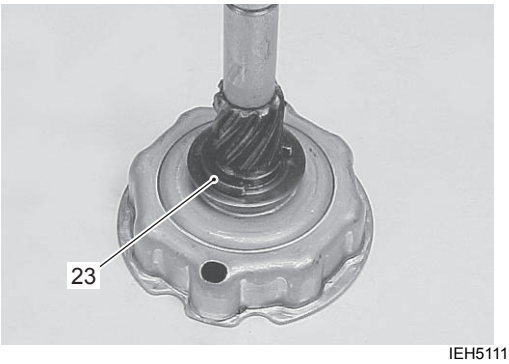

IEH511190019-01

14) Remove the pinion shaft (20), washers (24) and rubber ring (25) from the center bracket.

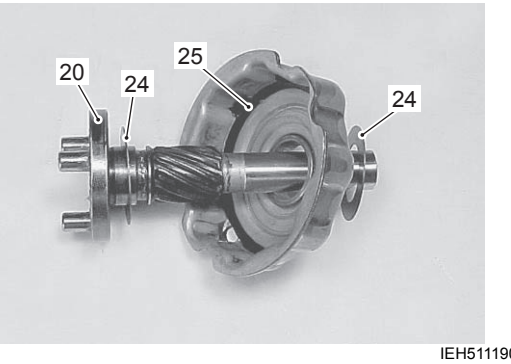

IEH511190020-01

Assembly

Assembly is in the reverse order of disassembly with special attention to the following steps.
Reassemble the starter motor, refer to “Starter Motor Components” (Page 1I-7).

- When installing the armature, use care to avoid breaking the brushes.

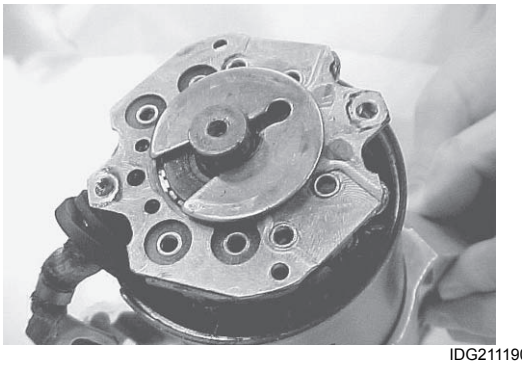

IDG211190021-01

Starter Motor Components Inspection and Servicing

CENFH5111906005

Armature and Commutator

- Inspect the commutator surface. If surface is gummy or dirty, clean with # 500 grit emery paper (1).

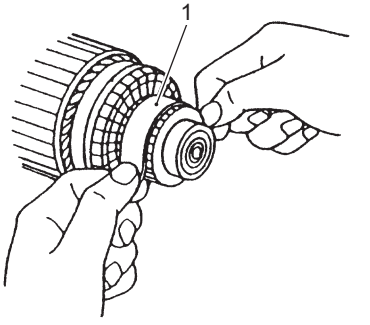

I9J011190022-01

- Measure the commutator outside diameter. If the measurement exceeds the service limit, replace the armature.

  Special tool
  (A): 09900–20101 (Vernier calipers (150 mm))

  Commutator outside diameter
  Standard: 29.0 mm (1.14 in.)
  Service limit: 28.0 mm (1.10 in.)

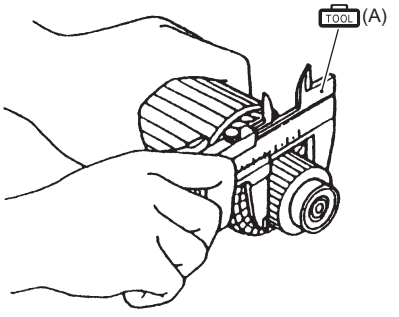

I9J011190023-01

- Check that the mica (insulator) (2) between the segments (3) is undercut to specified depth “a”.
  If the measurement exceeds the service limit, cut to the specified depth.

⚠ WARNING

Failure to following proper precautions during use of the compressed air may cause severe personal injury.

Wear safety glasses when using compressed air.

NOTE

Remove all particles of mica and metal using compressed air.

Commutator undercut “a”
Standard: 0.5 – 0.8 mm (0.02 – 0.03 in.)
Service limit: 0.2 mm (0.01 in.)

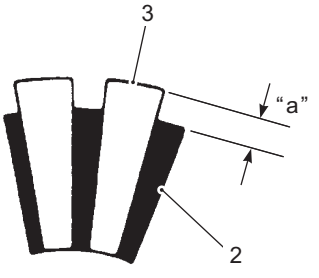

I9J011190024-01

2. Mica	3. Segment

- Check for continuity between the commutator (4) and the armature core (5)/shaft (6).
  Replace the armature if continuity is indicated.

  Special tool
  (B): 09900–25008 (Multi circuit tester set)

  Tester knob indication
  Continuity (•)))

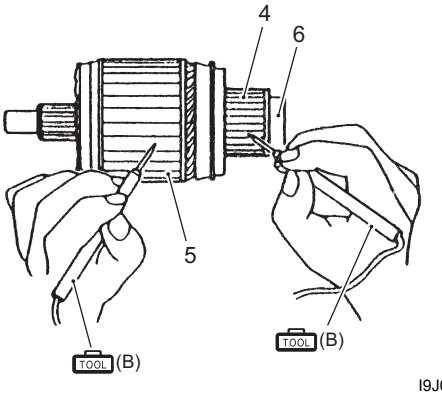

I9J011190025-01

4. Commutator	5. Armature core	6. Shaft

- Check for continuity between adjacent commutator segments. Replace armature if no continuity is indicated.

  Tester knob indication
  Continuity (•)))

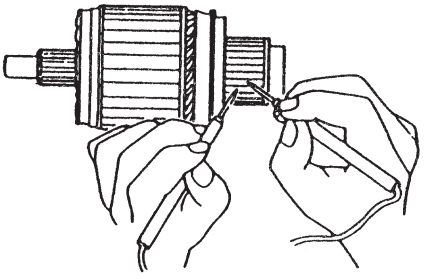

I9J011190026-01

Brushes
Check the length of each brush (1).
If brushes are worn down to the service limit, they must be replaced.

Special tool
(A): 09900–20101 (Vernier calipers (150 mm))

Brush length
Standard: 16.0 mm (0.63 in.)
Service limit: 12.0 mm (0.47 in.)

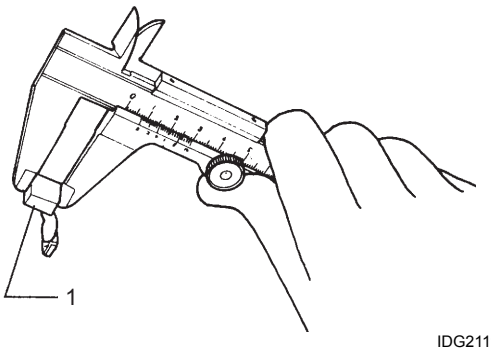

IDG211190033-01

Brush Holder
Check brush holder continuity.
Replace the brush holder if the tester doesn't show the below.

Special tool
TOOL : 09900–25008 (Multi circuit tester set)

Tester knob indication
Continuity (•))))

Brush holder continuity

	Continuity
Brush holder positive (+) to brush holder negative (–)	**No**
Brush holder positive (+) to base plate (ground)	**No**

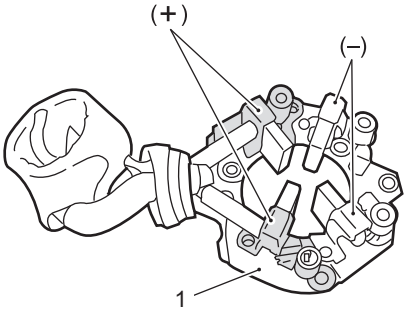

IFH511190002-01

1. Base plate

Shift Lever
Inspect the shift lever for wear. Replace if necessary.

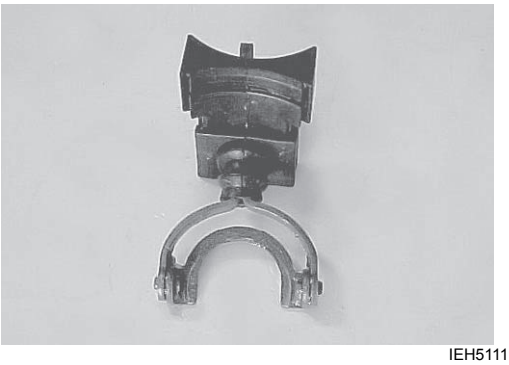

IEH511190021-01

Pinion and Over-Running Clutch

- Inspect the pinion for wear, damage or other abnormal conditions.
  Check that the clutch locks up when turned in the direction of drive and rotates smoothly in reverse direction. Replace if necessary.

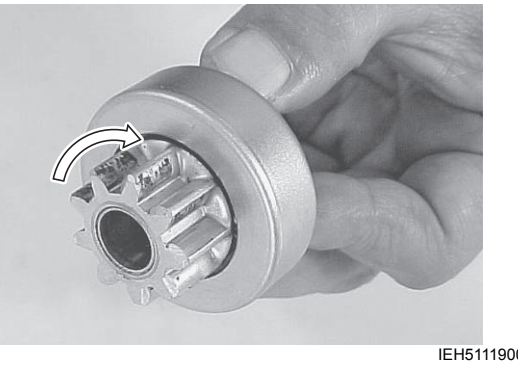

IEH511190022-01

- Inspect spline teeth for wear or other damage.
  Inspect the pinion for smooth movement. Replace if necessary.

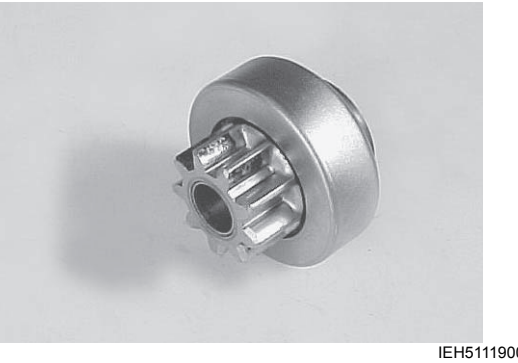

IEH511190023-01

Gear
Inspect planetary gears and internal gear for wear, damage or other abnormal conditions.
Replace if necessary.



IDG211190025-01

Pinion Shaft / Pinion Shaft Bushing

- Inspect the pinion shaft for wear, damage or other abnormal conditions. Replace if necessary.
- Inspect the pinion shaft bushing for wear or other damage.
  Replace if necessary.

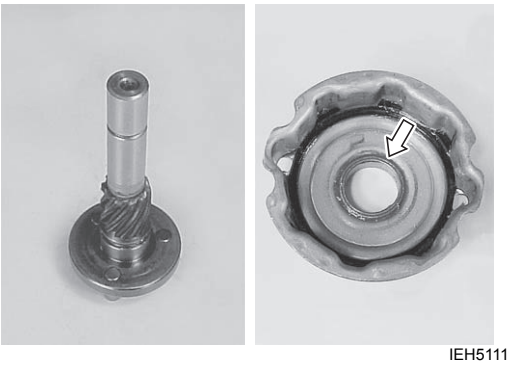

IEH511190024-01

Front Housing

- Inspect the front housing for wear, damage or other abnormal conditions. Replace if necessary.
- Inspect the bushing for wear or other damage. Replace if necessary.

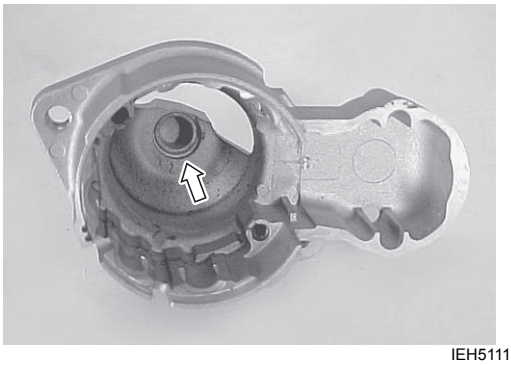

IEH511190025-01

Armature Shaft Bush

Inspect the bushing for wear or other damage.
Replace if necessary.



IDG211190028-01

Plunger

Inspect the plunger for wear or other damage.
Replace if necessary.

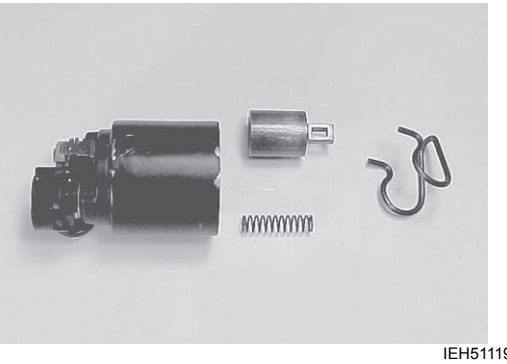

IEH511190026-01

Magnetic Switch

Push in the plunger and release. The plunger should return quickly to its original position.
Replace if necessary.

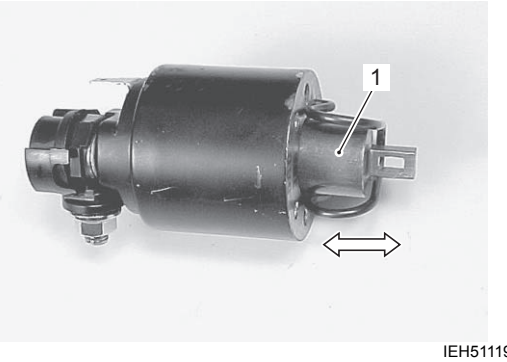

IEH511190027-01

1. Plunger

Pull-in coil open circuit test

Check for continuity across the magnetic switch terminal “S” (1) and terminal “M” (2).
If no continuity exists, the coil is open and should be replaced.

Special tool

TOOL (A): 09900–25008 (Multi circuit tester set)

Tester knob indication

Continuity (•)))

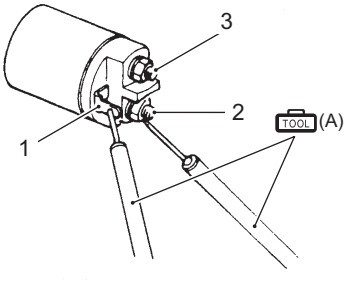

I9J011190038-02

1. Terminal “S”	2. Terminal “M”	3. Terminal “B”

Hold-in coil open circuit test
Check for continuity across the magnetic switch terminal "S" (1) and coil case (4).
If no continuity exists, the coil is open and should be replaced.

Special tool
(A): 09900–25008 (Multi circuit tester set)

Tester knob indication
Continuity (•))))

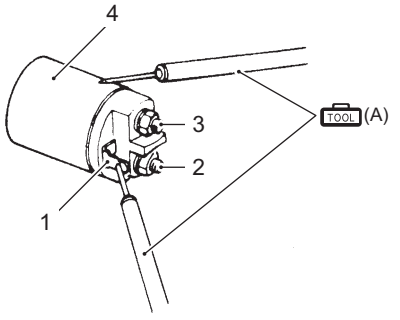

I9J011190039-01

1. Terminal "S"	3. Terminal "B"
2. Terminal "M"	4. Coil case

Contact points test
Put the plunger on the under side and then push the magnetic switch down.
At this time, check for continuity between terminal "B" and terminal "M".
Continuity indicates proper condition. If no continuity exists, replace the magnetic switch and/or plunger.

Special tool
(A): 09900–25008 (Multi circuit tester set)

Tester knob indication
Continuity (•))))

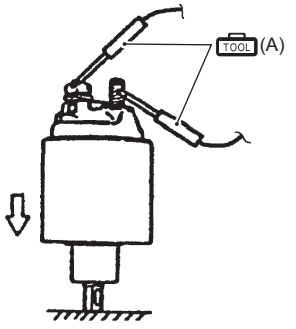

I9J011190040-01

Ignition Switch Inspection

CENFH5111906010

Inspect the ignition switch using the following procedures:

1) Disconnect the ignition switch from remo-con box wiring harness.
2) Check continuity between wiring leads at the key positions shown in the chart.
3) If out of specification, replace the ignition switch.

Special tool
(A): 09900–25008 (Multi circuit tester set)

Tester knob indication
Continuity (•))))

Key position	Switch lead wires					
	B	G	W	Gr	Br	O
OFF	○—○					
ON			○—○			
START			○—○	○—○		
FREE						
PUSH			○—○	○—○	○—○	○—○

○—○ : Continuity

IDG211190040-01

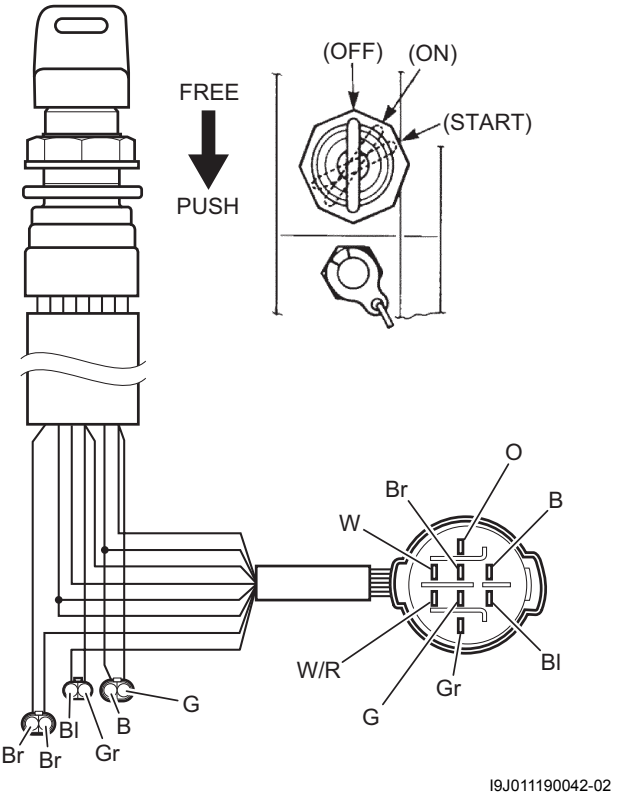

I9J011190042-02

Starter Motor Relay Inspection

CENFH5111906011

Inspect the starter motor relay using the following procedures:

1) Disconnect the starter motor relay (1) from the fuse box.

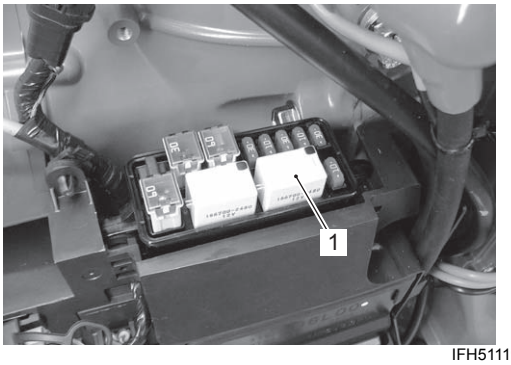

IFH511190013-01

2) Check continuity between terminal (2) and (3) each time 12 V power supply is applied to terminal (4) and (5).
Connect the positive (+) lead to terminal (5), and negative (–) lead to terminal (4).

NOTICE

If the 12 V power supply wire is connected to wrong terminal or touched to each other, the power supply wire, tester may be damaged.

Be careful not to touch 12 V power supply wires to each other or with other terminals.

Special tool
TOOL (A): 09900–25008 (Multi circuit tester set)

Tester knob indication
Continuity (•))))

Starter motor relay function

	Continuity
12 V power applied	**Yes**
12 V power not applied	**No**

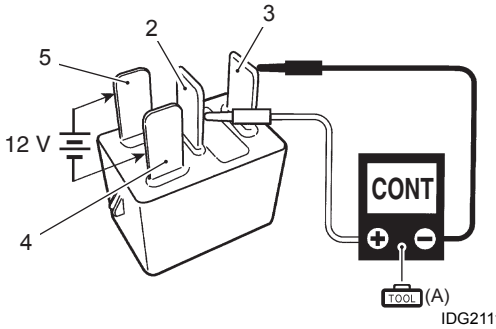

IDG211190039-01

3) Measure the resistance between relay terminals (4) and (5).
If out of specification, replace starter motor relay.

Tester knob indication
Resistance (Ω)

Starter motor relay solenoid coil resistance
Standard: 145 – 190 Ω

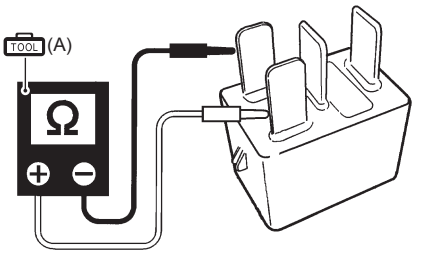

I9J011190044-02

Neutral Switch Removal and Installation

CENFH5111906012

Removal

1) Remove the lower side covers.
Refer to “Lower Side Cover Removal and Installation” in Section 2A (Page 2A-3).
2) Remove the fuel delivery pipe and intake manifold assembly.
Refer to “Intake Manifold Removal and Installation” in Section 1D (Page 1D-8).
3) Disconnect the neutral switch lead wire connector (1) and shift position sensor lead wire connector (2).

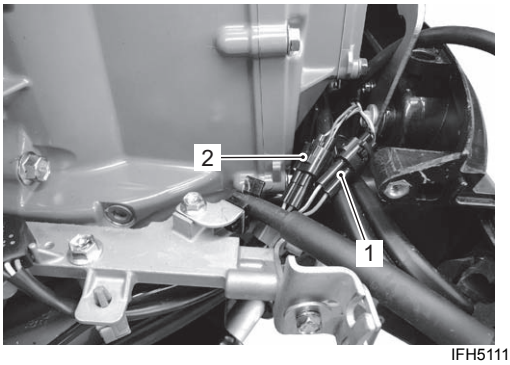

IFH511190014-04

4) Remove E-ring (3) from clutch lever shaft.

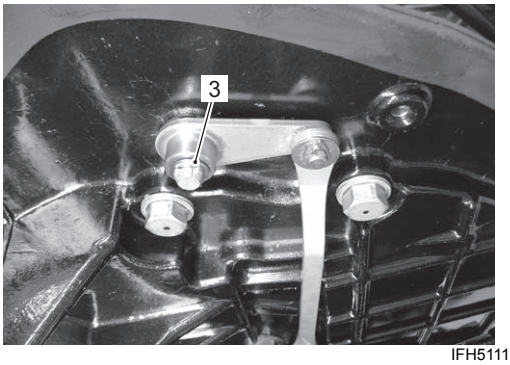

IFH511190015-01

5) Remove the two bolts (4) securing throttle/clutch lever holder (5).
Remove the throttle/clutch lever holder with neutral switch and shift position sensor.

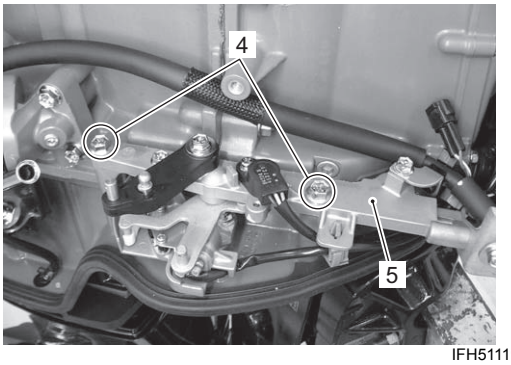

IFH511190016-02

6) Remove the screws and plate (6).

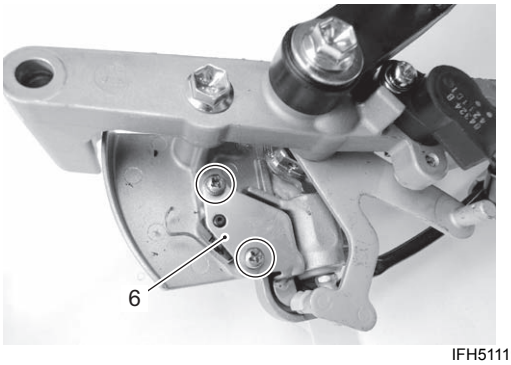

IFH511190017-03

7) Remove the neutral switch (7).

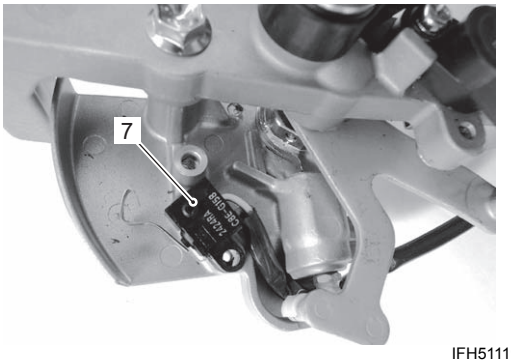

IFH511190018-02

Installation
Installation is reverse order of removal with special attention to the following steps.

- Place the neutral switch (1) in position.
- Apply thread lock to the switch mounting screws.

1342 : Thread lock cement 99000–32050 (SUZUKI Thread Lock 1342 (50 g))

- Install the plate (2) and screws, then tighten screws securely.
- Apply water resistant grease to the switch lever.

W : Grease 99000–25350 (SUZUKI Water Resistant Grease EP2 (250 g))

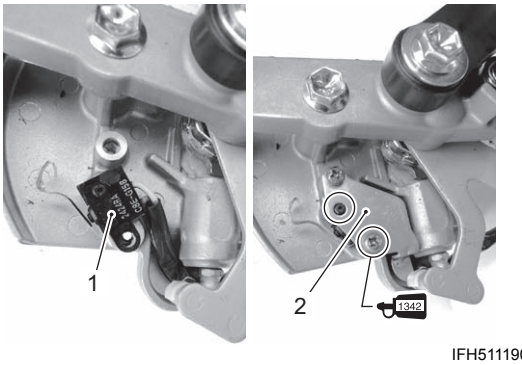

IFH511190019-03

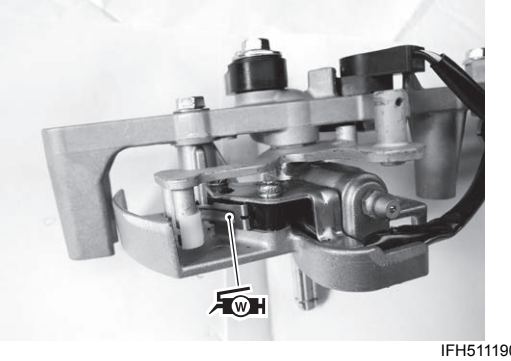

IFH511190020-04

- Secure lead wire with lead wire clamps, then check that lead wire routed properly.

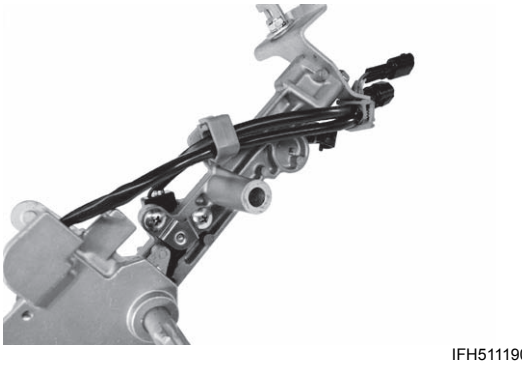

IFH511190021-03

- Apply water resistant grease to bush, then install the bush.
- Install the throttle/clutch lever holder with neutral switch and shift position sensor, then tighten bolts securely.

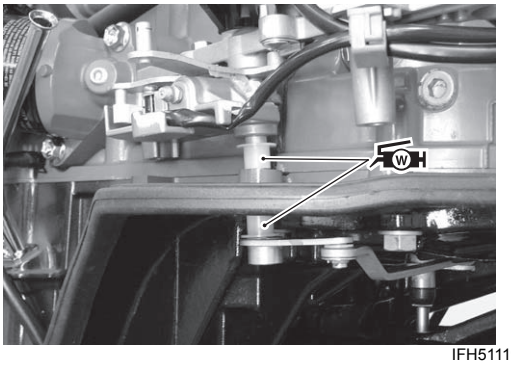

IFH511190022-01

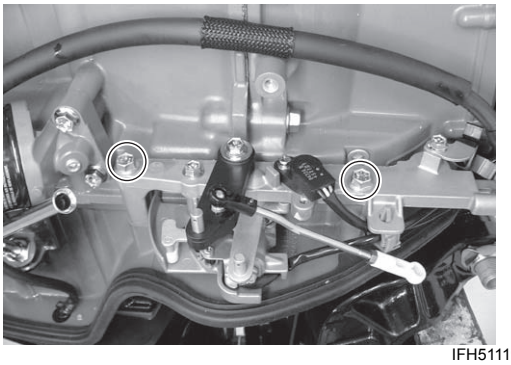

IFH511190023-01

- Install the fuel delivery pipe and intake manifold assembly.
  Refer to “Intake Manifold Removal and Installation” in Section 1D (Page 1D-8).
- Check to ensure that all removed parts are back in place.
- Check fuel and water hose routing.
  Refer to “Fuel Hose Routing” in Section 4B (Page 4B-1) and “Water Hose Routing” in Section 4B (Page 4B-6).
- Check wire routing.
  Refer to “Wiring Harness Routing Diagram” in Section 4A (Page 4A-2).
- Check for fuel leakage.
- Check for water leakage.

Neutral Switch Inspection

CENFH5111906013

Check for continuity/infinity of the neutral switch.

Special tool
TOOL (A): 09900–25008 (Multi circuit tester set)

Tester knob indication
Continuity (•))))

Neutral Switch in Remo-Con Box

1) Disconnect the neutral switch lead wire connector from the ignition switch.
2) Check continuity/infinity between the switch brown wire leads while operating the remo-con handle. If out of specification, replace the neutral switch.

Neutral switch function

Shift position	Tester indicates
Neutral	Continuity
Forward	Infinity
Reverse	Infinity

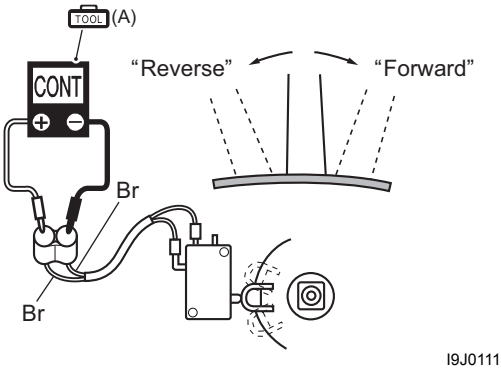

I9J011190045-03

Neutral Switch on Engine Side

1) Remove lower side covers.
   Refer to “Lower Side Cover Removal and Installation” in Section 2A (Page 2A-3).
2) Remove two bolts (1) securing front panel.

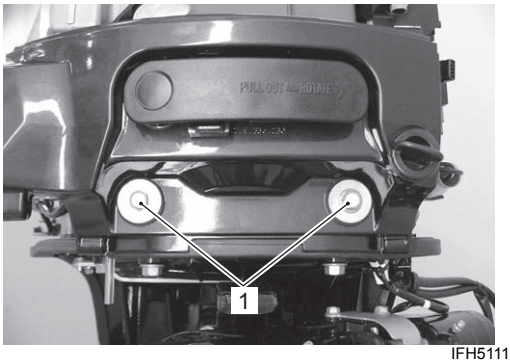

IFH511190024-01

3) Disconnect the neutral switch lead wire connector (2).

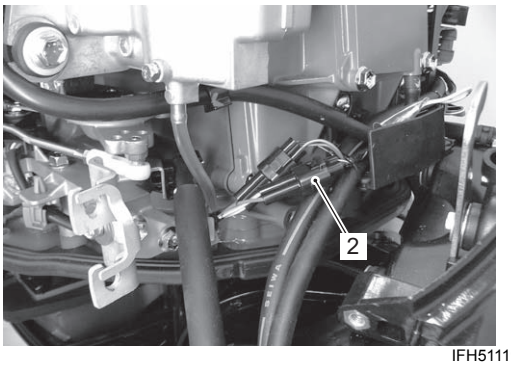

IFH511190025-01

4) Check continuity/infinity between the Yellow/Green and Brown lead wires while operating the remo-con handle.

Neutral switch function

Shift position	Tester indicates
Neutral	Continuity
Forward	Infinity
Reverse	Infinity

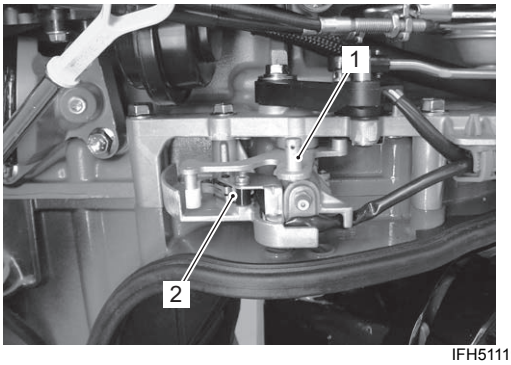

IFH511190026-01

1. Clutch lever	2. Neutral switch

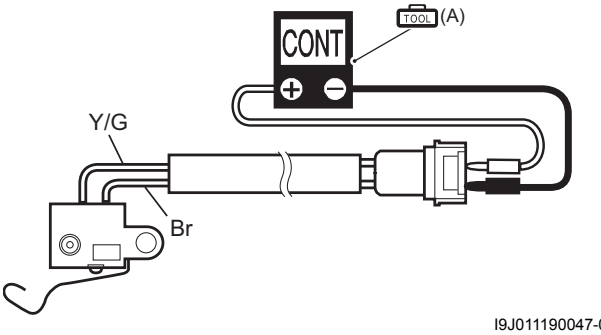

I9J011190047-03

5) If out of specification:

- 1st:
  Check the remo-con cable adjustment, readjust if necessary.
- 2nd:
  Check the wire harnesses for open and short circuits.
  If the wire harnesses are in good condition, replace the neutral switch and recheck.
  Refer to “Neutral Switch Removal and Installation” (Page 1I-14).

NOTE

After installing the neutral switch, check for correct function by operating the remo-con handle.

Charging System

General Description

Charging System Description

CENFH5111B01001

Outline

The battery charging system circuit is illustrated below.

It is composed of the battery charge coil, rectifier/regulator and battery. The three phase AC current generated from the battery charge coil is converted by the rectifier/regulator into regulated DC current which is used to charge the battery.

Battery charge coil output

Standard: 12 V 44 A (528 W) at 3 000 r/min

Regulated voltage

Standard: 14.2 – 15.2 V

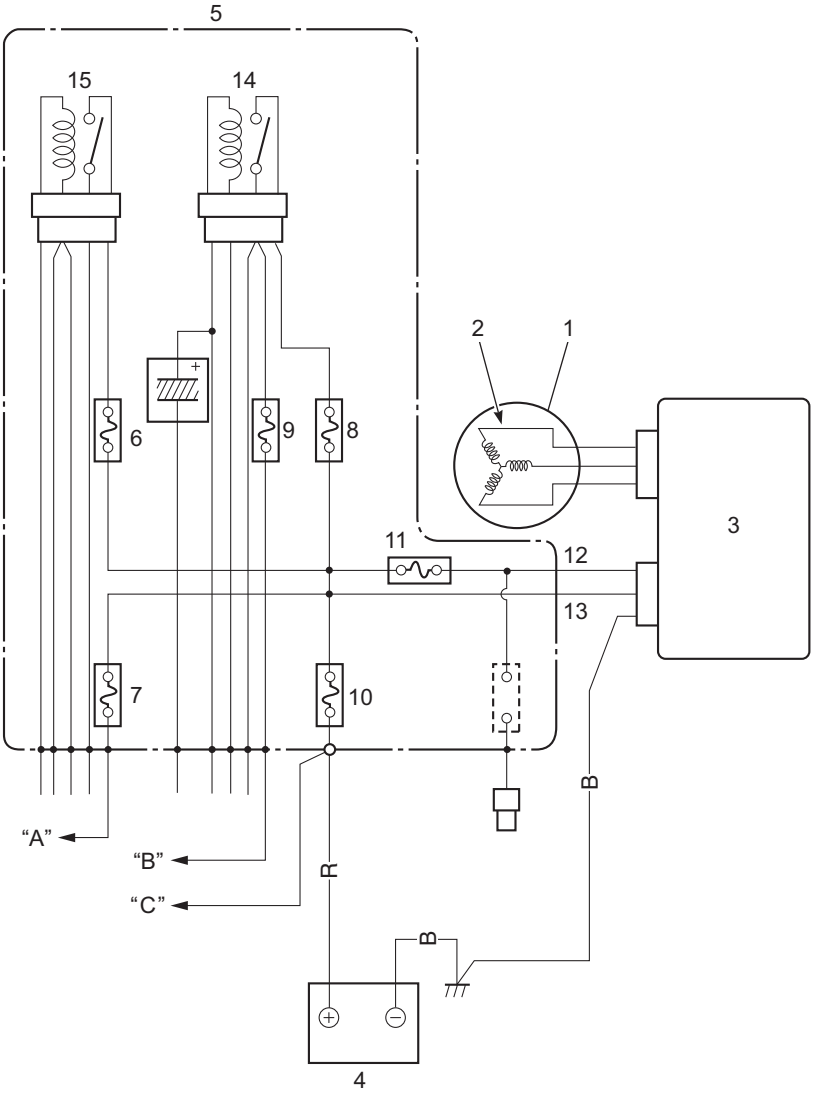

IFH5111B0001-02

1. Flywheel (Magneto)	6. 30 A fuse	11. 30 A fuse (Select, STD)	"A": To PTT switch
2. Battery charge coil	7. 10 A fuse	12. No.1 output line	"B": To IAC valve, VSV, OCV
3. Rectifier/regulator	8. 30 A fuse	13. No.2 output line	"C": To PTT relay
4. Battery (Main)	9. 10 A fuse	14. ECM main relay	
5. Fuse box	10. 60 A fuse	15. Starter motor relay	

Isolator Function

The battery charging system is equipped with an isolator function.
When a sub battery is used in addition to the main battery for engine operation, this function allows both the batteries to be charged at the same time.
To modify the charging circuit and distribute the power to the individual batteries, relocate the 30 amp fuse in [STD] position to [OPT x] position in the fuse box.
Relocation of the 30 amp fuse to [OPT x] position modifies the charging circuit so the No.2 red output line of the Rectifier & Regulator can charge the main battery for engine operation and the No.1 red output line can charge the sub battery.

NOTE

For proper charging circuit operation, the negative terminals of both batteries, main and sub batteries, must be connected with a cable of the same size as the existing battery cable.

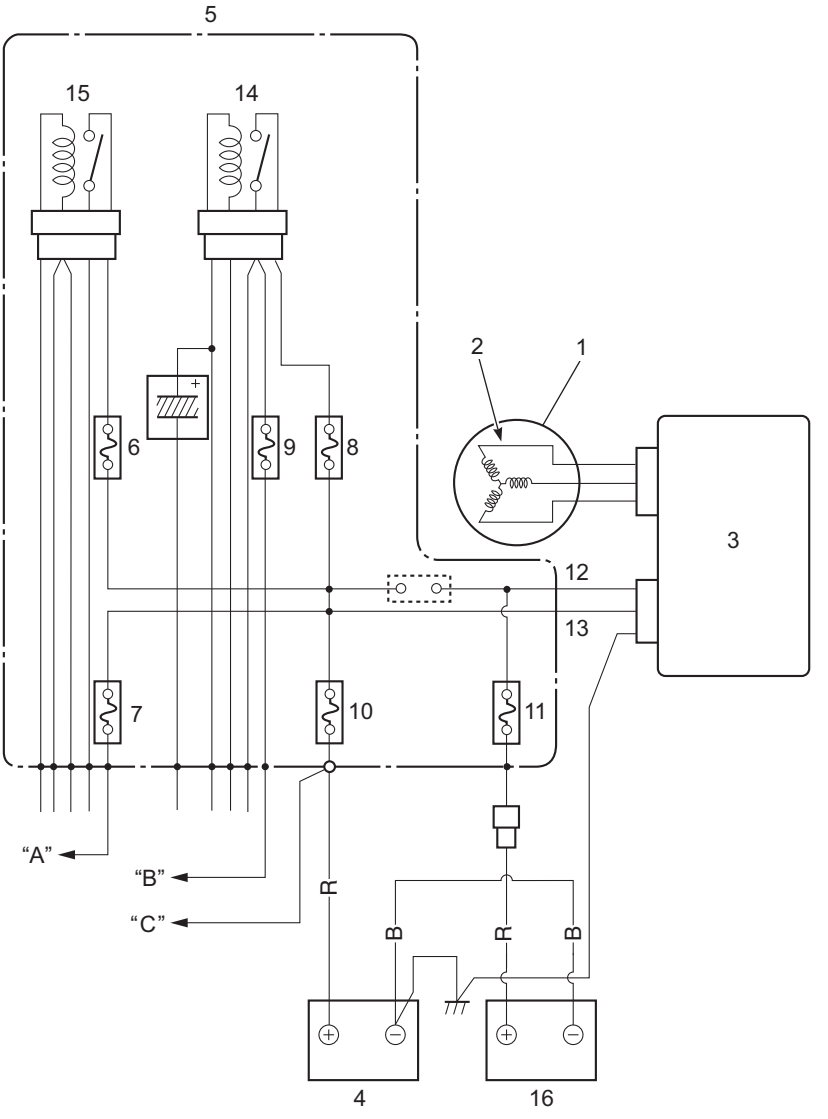

IFH5111B0002-01

1. Flywheel (Magneto)	6. 30 A fuse	11. 30 A fuse (Select, OPT x)	16. Battery (Sub)
2. Battery charge coil	7. 10 A fuse	12. No.1 output line	"A": To PTT switch
3. Rectifier/regulator	8. 30 A fuse	13. No.2 output line	"B": To IAC valve, VSV, OCV
4. Battery (Main)	9. 10 A fuse	14. ECM main relay	"C": To PTT relay
5. Fuse box	10. 60 A fuse	15. Starter motor relay	

Battery Requirement Description

CENFH5111B01002

Refer to “Battery Requirement” in Section 0A (Page 0A-5).

Component Location

Charging System Components Location

CENFH5111B03001

Refer to “Wiring Harness Routing Diagram” in Section 4A (Page 4A-2).

Diagnostic Information and Procedures

Charging System Diagnosis

CENFH5111B04001

Condition	Possible cause	Correction / Reference Item
Alternator (Battery charge coil) does not charge.	Open or short circuit lead wires.	*Repair or replace.*
	Open or short circuit battery charge coil.	*Replace.*
	Rectifier/Regulator failure.	*Replace.*
	Main fuse blown out.	*Replace.*
	Poor or broken battery connection.	*Repair or Replace.*
Alternator (Battery charge coil) overcharge.	Rectifier/Regulator failure.	*Replace.*
	Poorly grounded rectifier/regulator.	*Repair or Retighten.*
Unstable charging	Short circuit battery charge coil.	*Replace.*
	Loose lead wire connection.	*Repair or replace.*
	Rectifier/Regulator failure.	*Replace.*
	Poor or broken battery connection.	*Repair or replace.*

Service Instructions

Charging System Construction

CENFH5111B06001

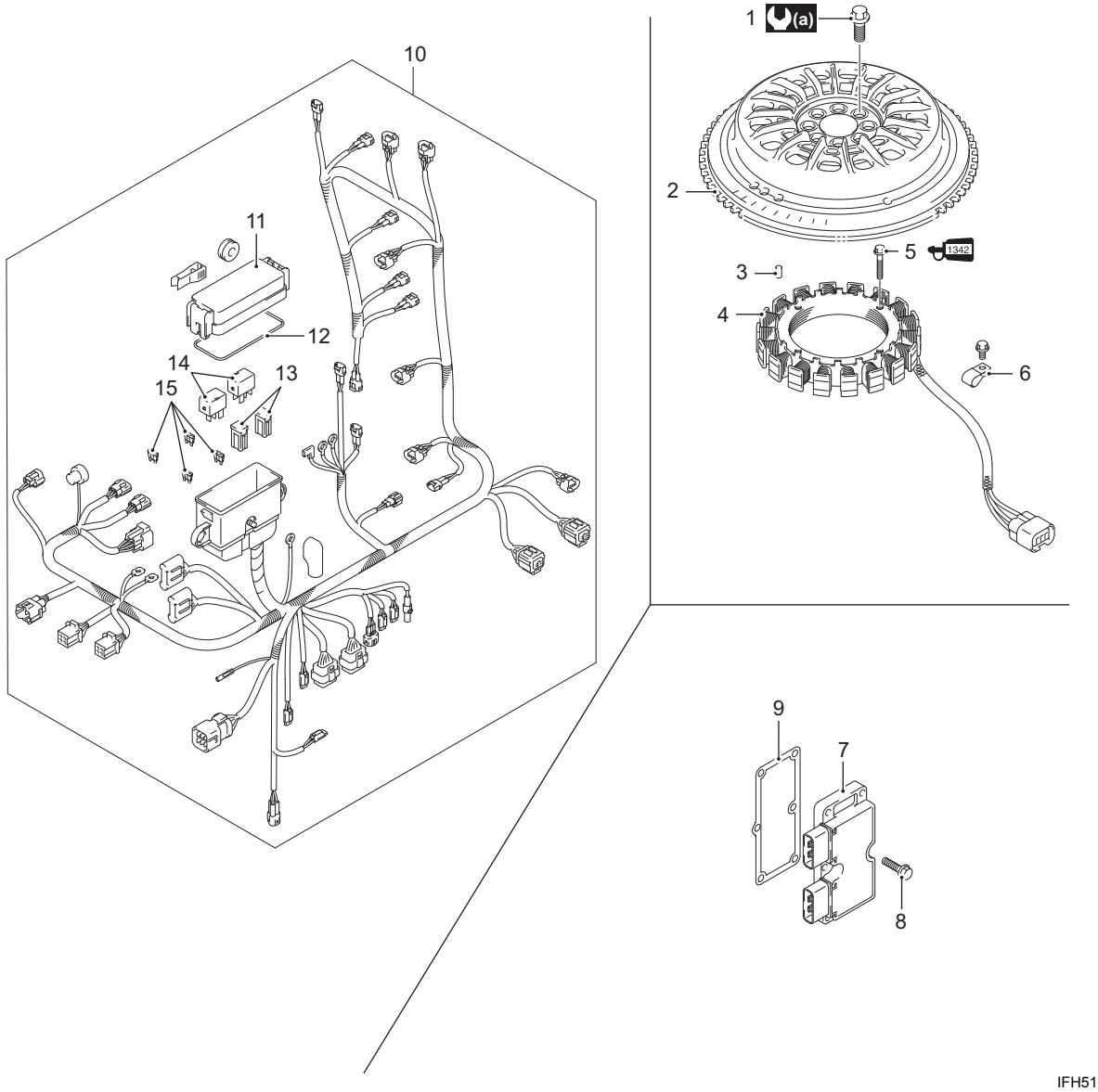

IFH5111B0003-03

1. Bolt	6. Clamp	11. Fuse case upper cover	(a) : 118 N·m (11.8 kgf-m, 85.5 lbf-ft)
2. Flywheel	7. Rectifier/Regulator	12. O-ring	1342 : Apply SUZUKI Thread Lock 1342.
3. Dowel pin	8. Bolt	13. Fuse (60 A, 30 A)	
4. Battery charge coil	9. Gasket	14. Relay	
5. Bolt	10. Wiring harness assembly	15. Fuse	

Flywheel Removal and Installation

CENFH5111B06002

Removal

⚠ CAUTION

Failure to take proper precaution when removing flywheel may result in personal injury and/or damage to electronic components.

Prior to removing flywheel, disconnect battery cables from battery.

1) Remove ring gear cover (1).
Refer to “Ring Gear Cover Removal and Installation” in Section 1D (Page 1D-2).

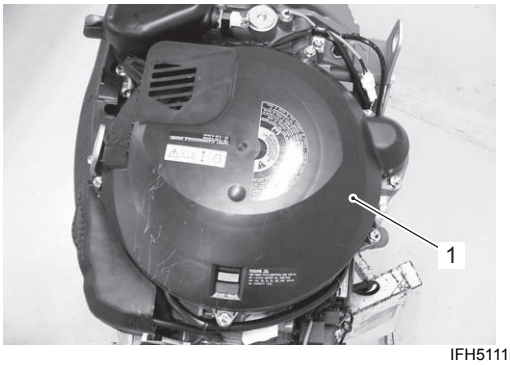

IFH5111B0005-01

2) Remove the bolt (2) securing lead wire clamp.

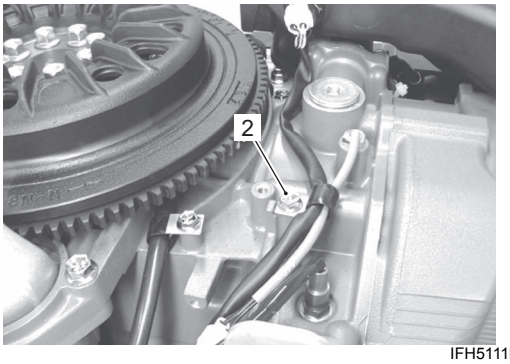

IFH5111B0006-02

3) To lock the flywheel (3) when removing attaching bolts, use special tool shown in figure.
Use bolts and threaded holes “A” on top of cylinder to attach special tool.

Special tool
TOOL (A): 09916–99312 (Flywheel holder)

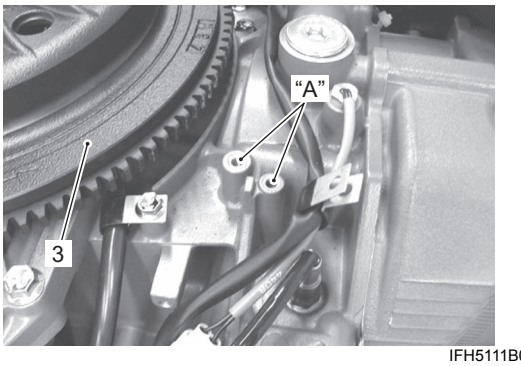

IFH5111B0007-03

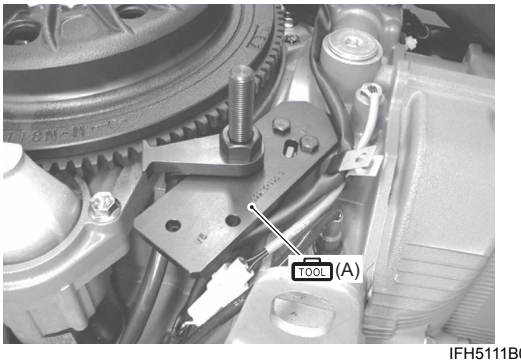

IFH5111B0008-02

4) Remove eight flywheel bolts (4).

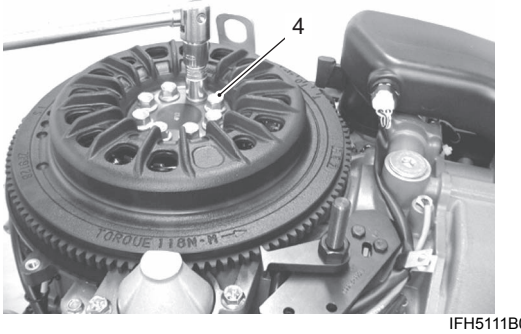

IFH5111B0009-02

5) Remove flywheel and dowel pin (5).

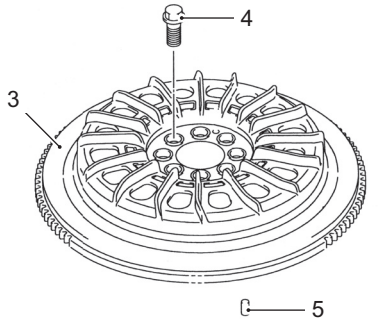

IFH5111B0004-01

Installation

Installation is reverse order of removal with special attention to the following steps.

- Install dowel pin (1).

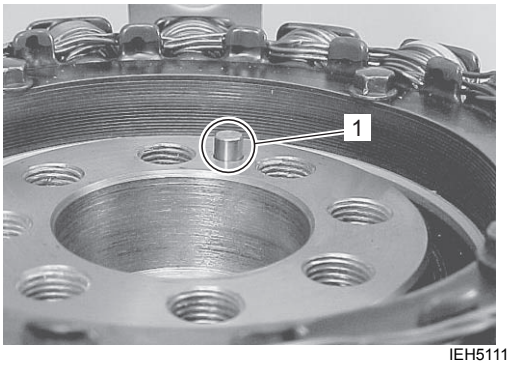

IEH5111B0020-01

- Install flywheel (2) onto crankshaft making sure to align dowel pin hole “A” with the pin (1).

NOTE

Before installing the flywheel magneto, wipe the crankshaft and flywheel clean.

NOTICE

Before tightening flywheel bolts, make sure the flywheel dowel pin hole and crankshaft dowel pin align, or severe damage may result.

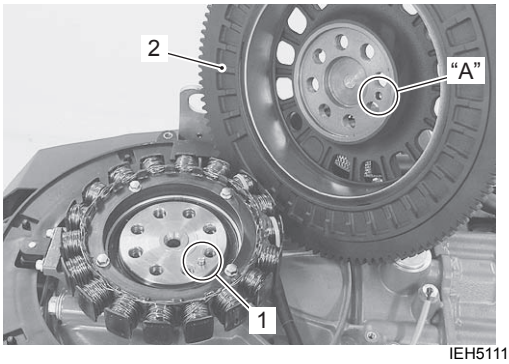

IEH5111B0008-01

- Tighten flywheel bolts (3) to specified torque. To lock flywheel, use special tool as shown in figure.

Tightening torque
Flywheel bolt (a): 118 N·m (11.8 kgf-m, 85.5 lbf-ft)

Special tool
TOOL (A): 09916–99312 (Flywheel holder)

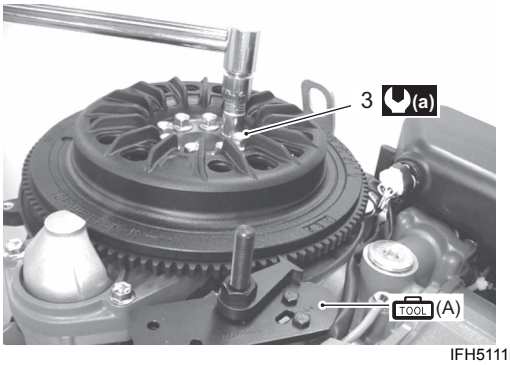

IFH5111B0010-02

- After installing flywheel and torquing bolts to specification, check air gap between CKP sensor and flywheel reluctor bars.
  Refer to “CKP Sensor Removal and Installation” in Section 1C (Page 1C-10).
- Check to ensure that all removed parts are back in original position.

Battery Charge Coil Removal and Installation

CENFH5111B06003

Removal

⚠ CAUTION

Failure to take proper precaution when removing electrical parts may result in personal injury and/or damage to electronic components.

Prior to removing electrical parts, disconnect battery cables from battery.

1) Remove flywheel.
   Refer to “Flywheel Removal and Installation” (Page 1K-5).
2) Remove four screws securing the battery charge coil (1).
3) Remove the bolt and lead wire clamp (2).
   Unfasten the cable tie (3) binding lead wire.
4) Disconnect charge coil lead wire connector (4) from Rectifier/regulator.
   Remove the battery charge coil (1).

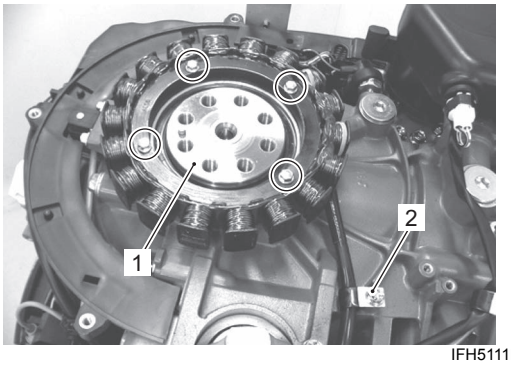

IFH5111B0011-02

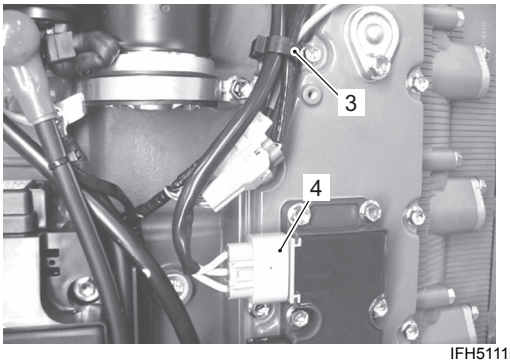

IFH5111B0012-02

Installation

Installation is reverse order of removal with special attention to the following steps.

- Apply thread lock to the coil securing screws.

  1342 : Thread lock cement 99000–32050 (SUZUKI Thread Lock 1342 (50 g))

- Install battery charge coil, then tighten screws securely.
- Secure coil lead wire with lead wire clamps (1).

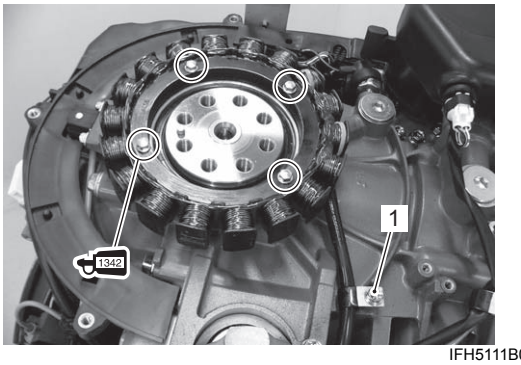

IFH5111B0013-02

- Check that coil lead wires are routed properly and away from hot or rotating parts.
  For wire routing, refer to “Wiring Harness Routing Diagram” in Section 4A (Page 4A-2).
- Install flywheel and tighten flywheel bolt to specified torque.
  Refer to “Flywheel Removal and Installation” (Page 1K-5).

Battery Charge Coil Inspection

CENFH5111B06004

Measure battery charge coil resistance in the following procedure.

1) Disconnect battery charge coil leads from rectifier/regulator.
2) Measure resistance between leads in the combinations shown.
   If measurement exceeds specification, replace battery charge coil.

Special tool
TOOL : 09900–25008 (Multi circuit tester set)

Tester knob indication
Resistance (Ω)

Battery charge coil resistance

Terminal for tester probe connection	Resistance
Yellow 1 to Yellow 2	0.14 – 0.30 Ω
Yellow 2 to Yellow 3	
Yellow 3 to Yellow 1	

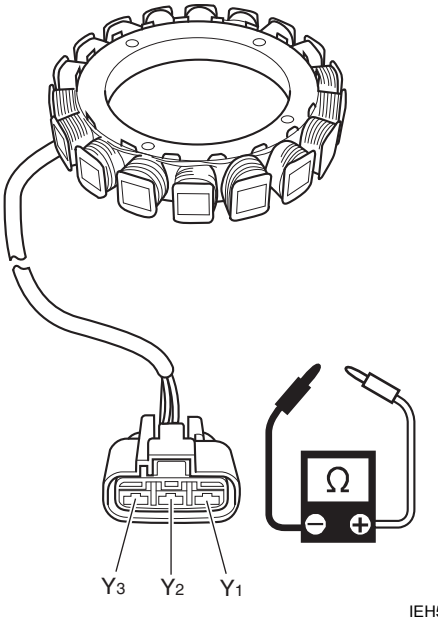

IEH5111B0013-01

Rectifier / Regulator Removal and Installation

CENFH5111B06005

Removal

⚠ CAUTION

Failure to take proper precaution when removing electrical parts may result in personal injury and/or damage to electronic components.

Prior to removing electrical parts, disconnect battery cables from battery.

1) Disconnect lead wire connectors (1) from rectifier/regulator (2).
2) Remove the six bolts and rectifier/regulator.

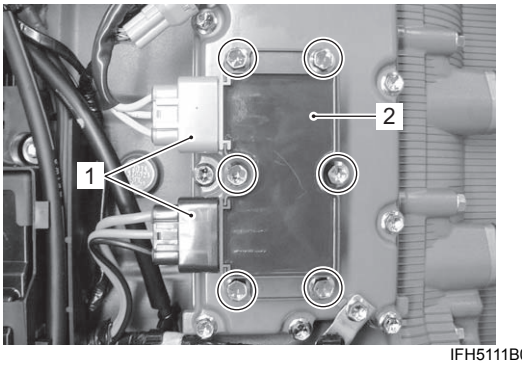

IFH5111B0014-01

3) Remove the gasket (3).

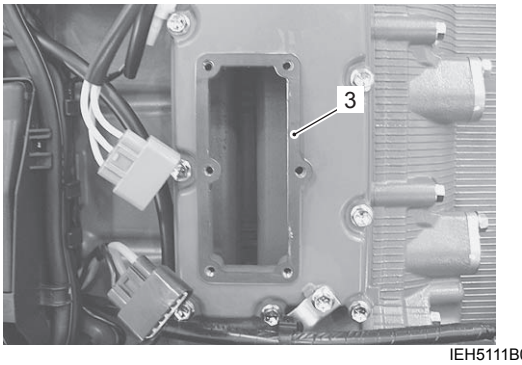

IEH5111B0015-01

Installation

Installation is reverse order of removal with special attention to the following steps.

- Install gasket and rectifier/regulator, then tighten bolts securely.

NOTICE

A previously-used gasket may leak, resulting in engine damage.

Do not re-use gasket once removed. Always use a new gasket.

- Connect lead wire connectors. Check that lead wire routed properly.
  Refer to “Wiring Harness Routing Diagram” in Section 4A (Page 4A-2).

Rectifier / Regulator Inspection

CENFH5111B06006

Inspect the rectifier/regulator in the following procedures:

1) Disconnect all lead wires of rectifier/regulator.
2) Measure voltage between terminals in the combinations shown.
   If measurement exceeds specification, replace rectifier/regulator.

Special tool
TOOL : 09900–25008 (Multi circuit tester set)

Tester knob indication
Diode test (⊣◀)

Unit: V

		Tester probe (+) (Red)					
	—	Black	Red 1	Red 2	Yellow 1	Yellow 2	Yellow 3
Tester probe (–) (Black)	Black	—	*	*	*	*	*
	Red 1	0.6 – 0.9	—	*	0.3 – 0.6	0.3 – 0.6	0.3 – 0.6
	Red 2	0.6 – 0.9	*	—	0.3 – 0.6	0.3 – 0.6	0.3 – 0.6
	Yellow 1	0.3 – 0.6	*	*	—	*	*
	Yellow 2	0.3 – 0.6	*	*	*	—	*
	Yellow 3	0.3 – 0.6	*	*	*	*	—

*: 1.3 V or more (tester's battery voltage)

NOTE

If the tester reads 1.4 V or below when the tester probes are not connected, replace its battery.

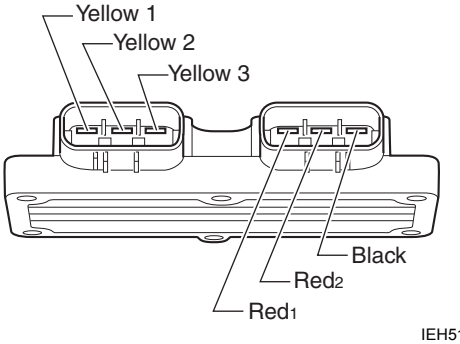

IEH5111B0016-01

3) Connect all lead wires of rectifier/regulator.

Main Fuse Inspection

CENFH5111B06007

Inspect the main fuse in the following procedures.

1) Remove the main fuse (1) from fuse box.

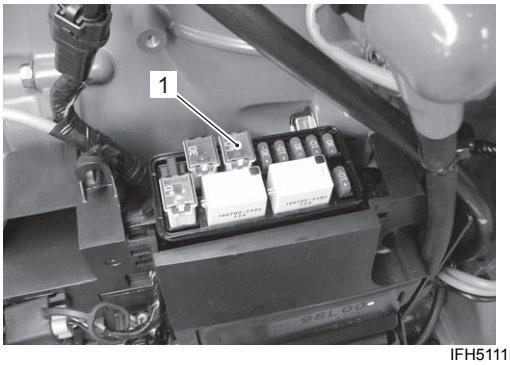

IFH5111B0015-02

2) Inspect continuity between both terminal of fuse.
If no continuity is indicated, replace fuse.

Special tool
(TOOL) : 09900–25008 (Multi circuit tester set)

Tester knob indication
Continuity (•)))

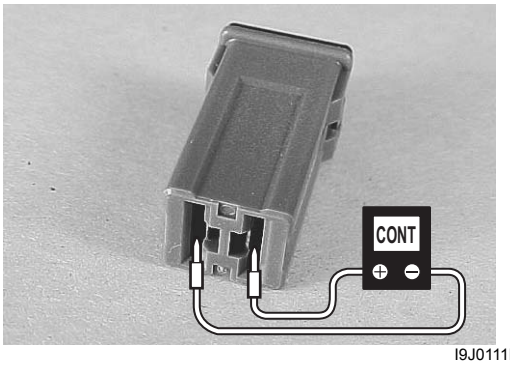

I9J0111B0023-01

Section 2

Mid Unit

CONTENTS

Precautions 2-1
Precautions 2-1
Precaution for Mid Unit 2-1

Housing and Bracket 2A-1
Precautions 2A-1
Precaution for Housing and Bracket 2A-1
Service Instructions 2A-2
Lower Side Cover Components 2A-2
Lower Side Cover Removal and Installation 2A-3
Engine Holder / Oil Pan / Driveshaft Housing / Mounts Components 2A-4
Engine Holder / Oil Pan / Driveshaft Housing / Mounts Disassembly 2A-6
Engine Holder / Oil Pan / Driveshaft Housing / Mounts Assembly 2A-10
Engine Holder / Oil Pan / Driveshaft Housing / Mounts Related Component Inspection 2A-14
Clutch Shaft Bearing and Oil Seal Replacement 2A-15
Mount Oil Seal Cover Oil Seal Replacement 2A-17
Clamp / Swivel / Steering Bracket Components 2A-18
Clamp / Swivel / Steering Brackets Disassembly 2A-19
Clamp / Swivel / Steering Brackets Assembly 2A-21
Clamp / Swivel / Steering Brackets Related Components Inspection 2A-25

Power Trim and Tilt 2B-1
Precautions 2B-1
Precaution for Power Trim and Tilt 2B-1
General Description 2B-2
Power Trim and Tilt Description 2B-2
Principles of Power Trim and Tilt Operation Description 2B-3
Schematic and Routing Diagram 2B-9
Power Trim and Tilt System Diagram 2B-9
Diagnostic Information and Procedures 2B-11
Diagnose PTT System Malfunction 2B-11
Service Instructions 2B-12
Checking PTT Fluid Level 2B-12
Air Bleeding from PTT Unit 2B-12
Setting Trim Down Position Limit 2B-13
Power Trim and Tilt Unit Removal and Installation 2B-14
Power Trim and Tilt Unit Components 2B-18
Power Trim and Tilt Unit Disassembly 2B-19
Power Trim and Tilt Unit Reassembly 2B-21
Power Trim and Tilt Unit Components Cleaning and Inspecting 2B-24
Power Trim and Tilt Motor Removal and Installation 2B-25
Power Trim and Tilt Motor Disassembly and Assembly 2B-26
PTT Motor Related Items Inspection 2B-27
PTT Motor Relay Inspection 2B-29
PTT Switch Inspection 2B-30
Tilt Limit Switch Inspection 2B-30

Precautions

Precautions

Precaution for Mid Unit

CENFH5112000001

Refer to “General Precautions” in Section 00 (Page 00-1).

Housing and Bracket

Precautions

Precaution for Housing and Bracket

CENFH5112100001

NOTICE

Do not break or cut bonding wires, as they perform an important function in the prevention of galvanic corrosion or build up of static charges.
Replace any damaged wire.

NOTE

- **When disassembling housing and bracket, inspect mountings and bolts for damage and wear. Replace if necessary.**
- **Check the condition of the zinc anodes on lower section of mid unit. Replace if necessary.**

Service Instructions

Lower Side Cover Components

CENFH5112106001

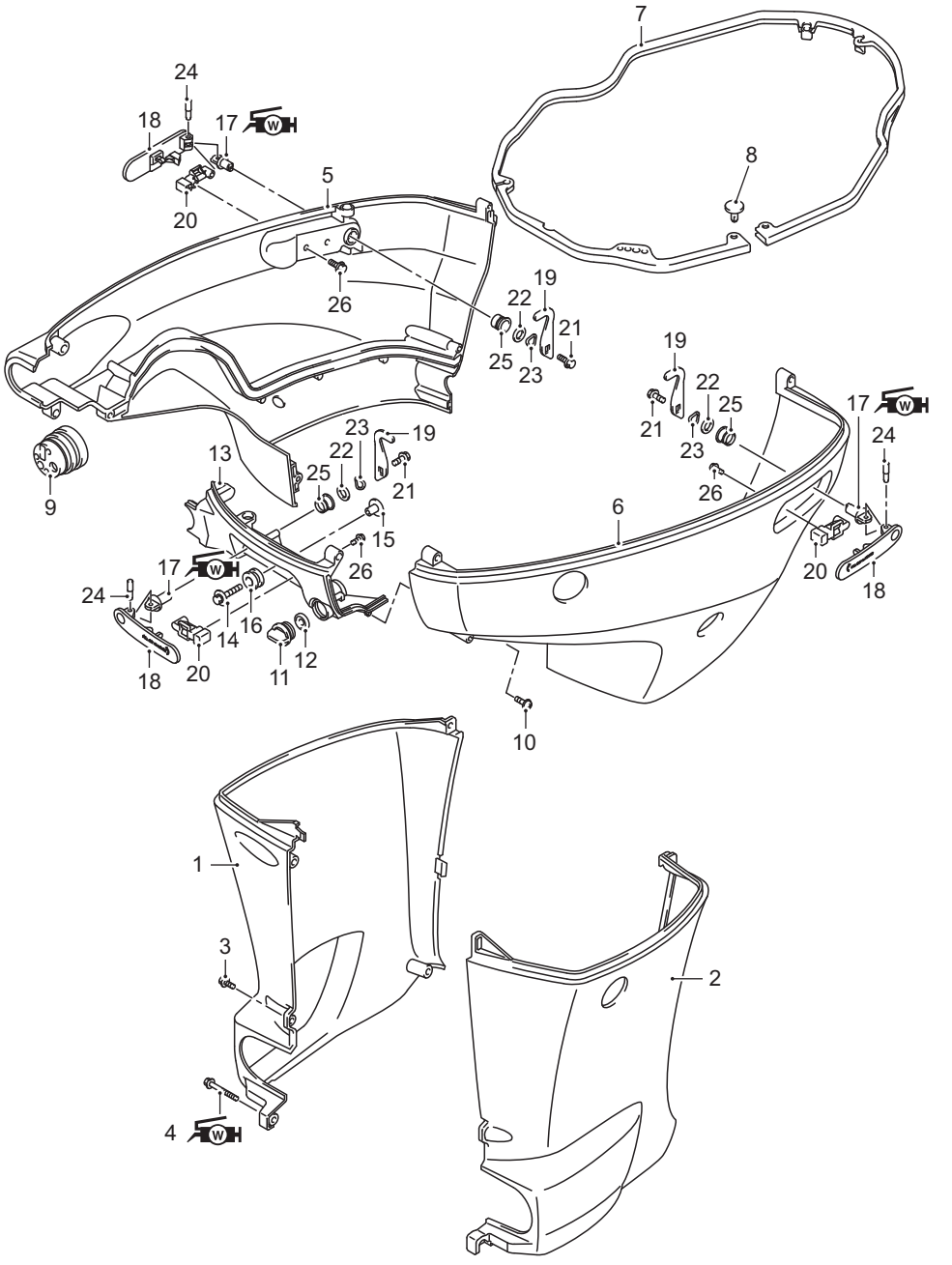

IFH511210013-02

1. Oil pan cover STBD	10. Screw	19. Engine cover hook
2. Oil pan cover PORT	11. Plug	20. Latch
3. Screw	12. Gasket	21. Bolt
4. Bolt	13. Front panel	22. Washer
5. Lower side cover STBD	14. Bolt	23. Washer
6. Lower side cover PORT	15. Washer	24. Pin
7. Side cover seal	16. Cushion	25. Bushing
8. Pin	17. Engine cover hook shaft	26. Screw
9. Grommet	18. Engine cover hook lever	: Apply SUZUKI Water Resistant Grease.

Lower Side Cover Removal and Installation

CENFH5112106002

Removal

1) Remove six screws (1) and STBD side cover (2).

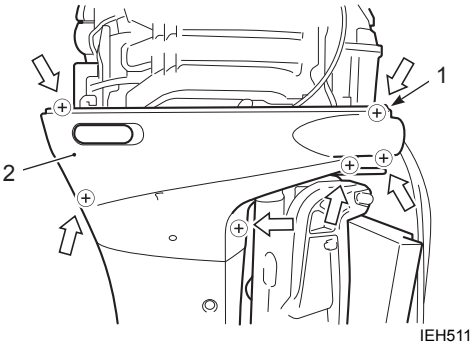

IEH511210108-01

2) Remove two screws (3) and PORT side cover (4).

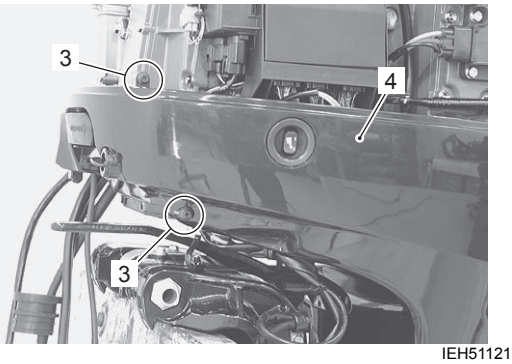

IEH511210002-04

3) Disconnect PTT switch lead wire connector (5).

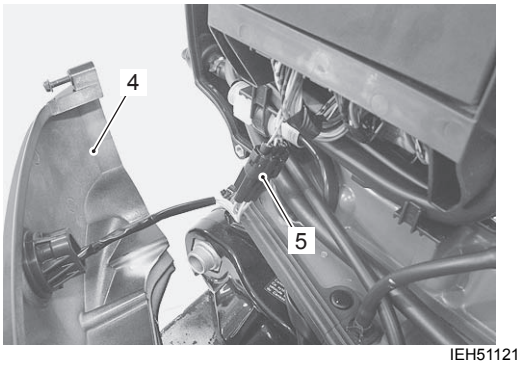

IEH511210003-04

4) Remove five screws and STBD/PORT oil pan covers (6) and (7).

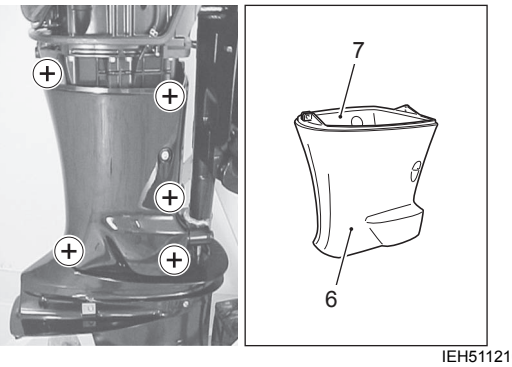

IEH511210004-04

Installation

Installation is reverse order of removal.

Engine Holder / Oil Pan / Driveshaft Housing / Mounts Components

CENFH5112106003

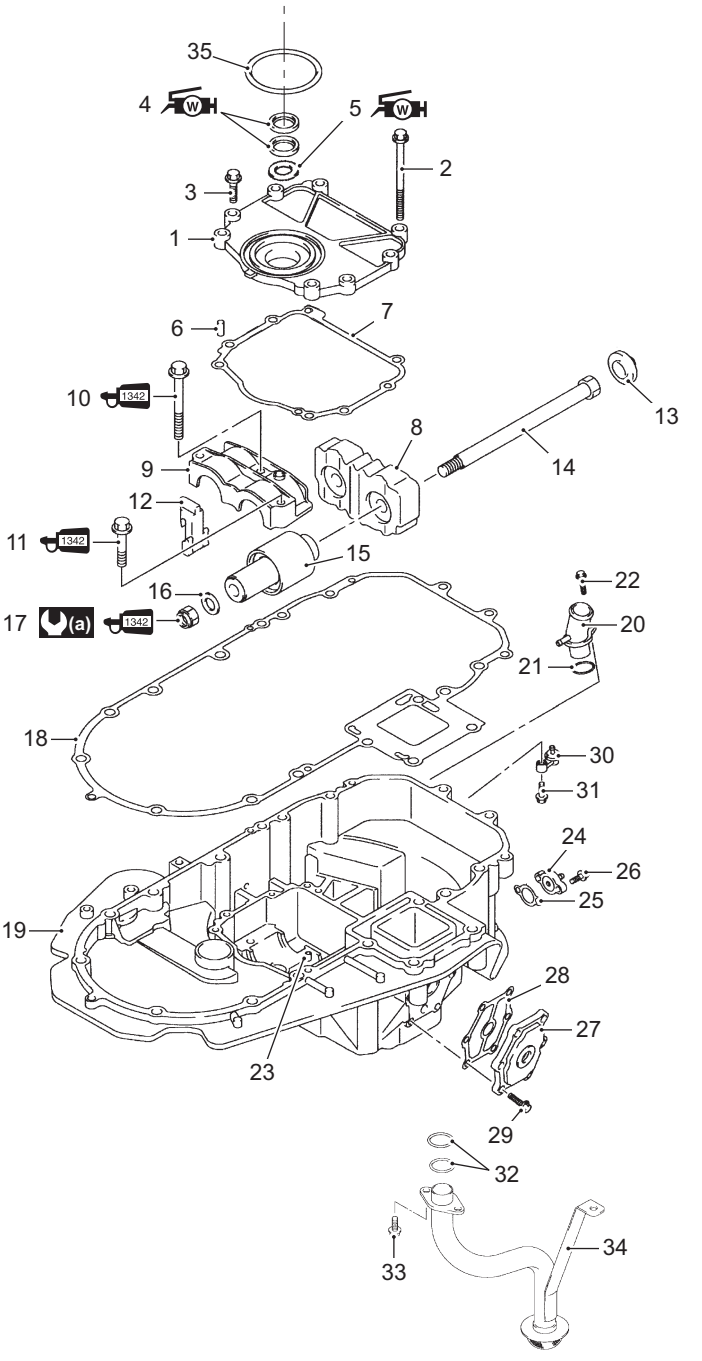

IFH511210014-02

1. Mount oil seal cover	11. Bolt	21. O-ring	31. Bolt
2. Bolt	12. Upper side mount	22. Bolt	32. O-ring
3. Bolt	13. Spacer	23. Pin	33. Bolt
4. Oil seal	14. Upper mount bolt	24. Engine holder cover	34. Oil strainer
5. Scraper	15. Upper mount	25. Gasket	35. O-ring
6. Pin	16. Washer	26. Bolt	(a) : 100 N·m (10 kgf-m, 72.5 lbf-ft)
7. Gasket	17. Nut	27. Water jacket cover	W : Apply SUZUKI Water Resistant Grease.
8. Upper thrust mount	18. Gasket	28. Gasket	1342 : Apply SUZUKI Thread Lock 1342.
9. Upper mount cover	19. Engine holder	29. Bolt	
10. Bolt	20. Water return union	30. Water indicator	

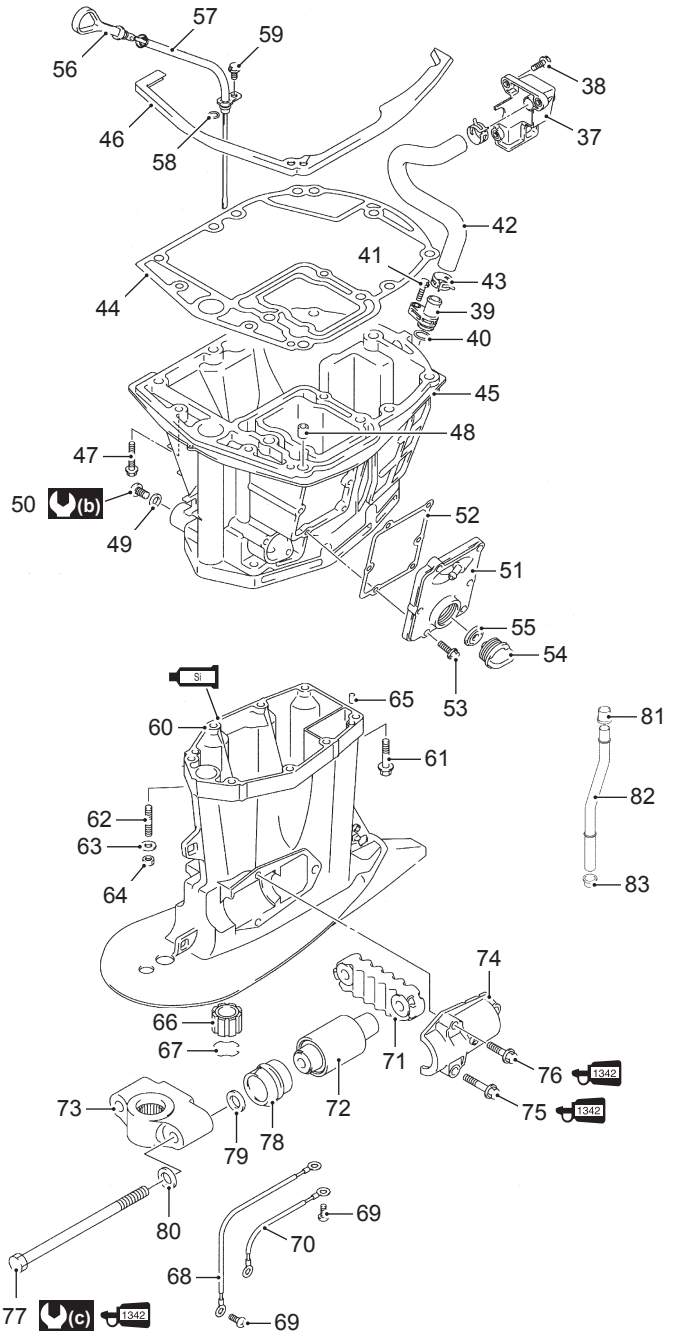

IEH511210110-02

37. Exhaust release pipe	50. Oil drain plug	63. Washer	76. Bolt
38. Bolt	51. Water jacket cover	64. Nut	77. Lower mount bolt
39. Exhaust pipe	52. Gasket	65. Pin	78. Lower side mount
40. O-ring	53. Bolt	66. Bushing (Type: X)	79. Washer
41. Bolt	54. Plug	67. Ring	80. Washer
42. Hose	55. Gasket	68. Bonding wire	81. Bushing
43. Clip	56. Oil level gauge	69. Screw	82. Water tube
44. Gasket	57. Oil level gauge guide	70. Bonding wire	83. Bushing
45. Oil pan	58. O-ring	71. Lower thrust mount	(b) : 13 N·m (1.3 kgf-m, 9.5 lbf-ft)
46. Seal	59. Bolt	72. Lower mount	(c) : 100 N·m (10 kgf-m, 72.5 lbf-ft)
47. Bolt	60. Driveshaft housing	73. Lower mount bracket	1342 : Apply SUZUKI Thread Lock 1342.
48. Pin	61. Bolt	74. Lower mount cover	Si : Apply SUZUKI Silicone Seal.
49. Gasket	62. Stud bolt	75. Bolt	

Engine Holder / Oil Pan / Driveshaft Housing / Mounts Disassembly

CENFH5112106004

1) Remove power unit.
   Refer to “Power Unit Removal and Installation” in Section 1D (Page 1D-20).
2) Remove lower unit.
   Refer to “Lower Unit Removal and Installation” in Section 3A (Page 3A-6).
3) Remove E-ring (1) from clutch lever shaft.

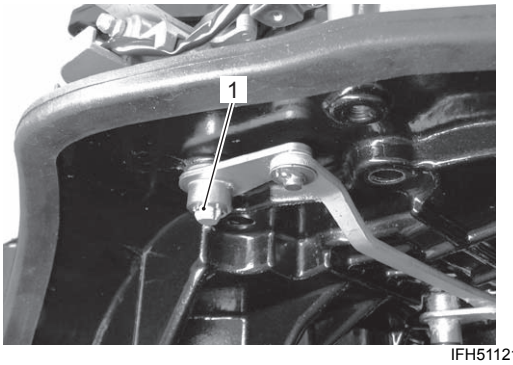

IFH511210015-01

4) Remove two bolts and throttle lever holder (2).

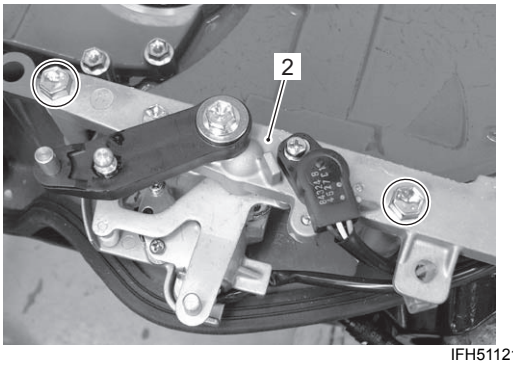

IFH511210016-01

5) Remove pin (3), hose union “A” and side cover seal (4).

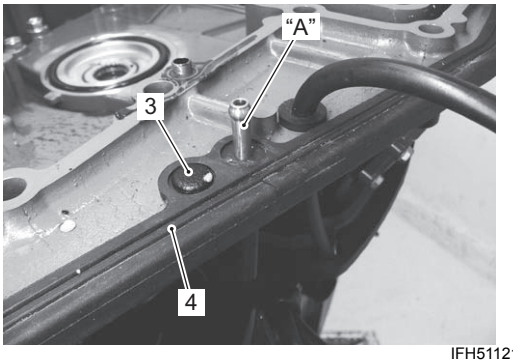

IFH511210017-01

6) Remove bolt and pilot water tube (5).

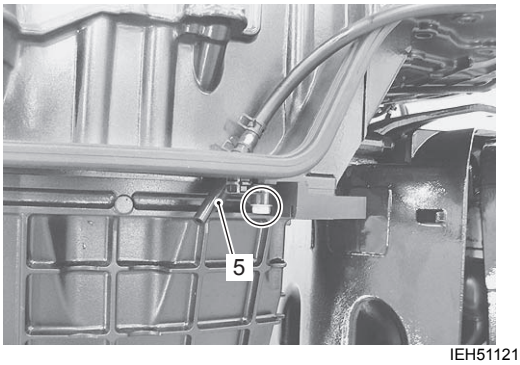

IEH511210058-02

7) Disconnect water hose (oil pan to 3 way joint) (6) from oil pan water jacket cover (7).

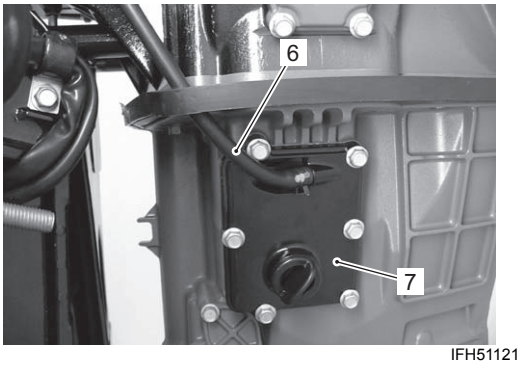

IFH511210018-01

8) Remove water hose (engine holder cover to cylinder block) (8).
   Remove two bolts and vacuum tank (9).

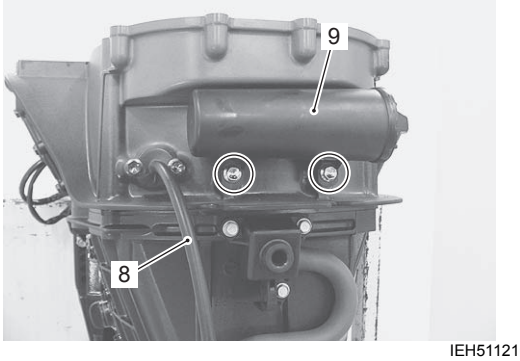

IEH511210060-02

9) Operate the PTT motor to extend the PTT rod upward.

Special tool
(TOOL) : 09945–79310 (PTT cable extension)

10) Remove the screw and bonding wire (10).
Unscrew and remove STBD/PORT lower mount bolts (11).
Account for washers (12).

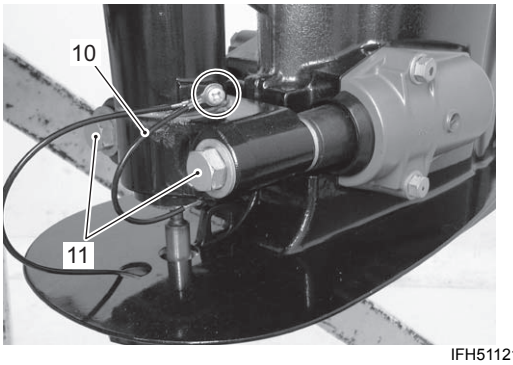

IFH511210019-01

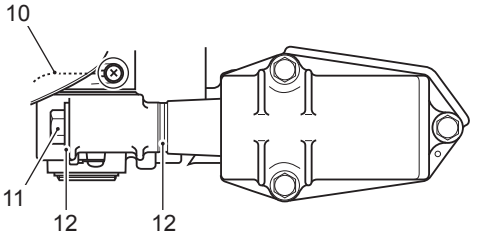

IEH511210062-02

11) Remove eight bolts and mount oil seal cover (13).

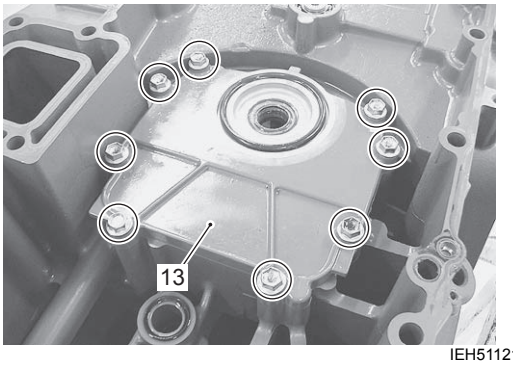

IEH511210070-03

12) Remove STBD/PORT upper mount nuts (14) and washers.

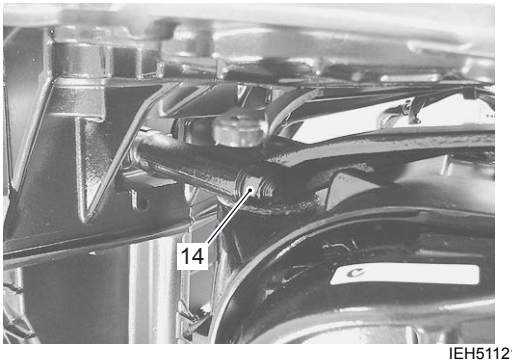

IEH511210063-03

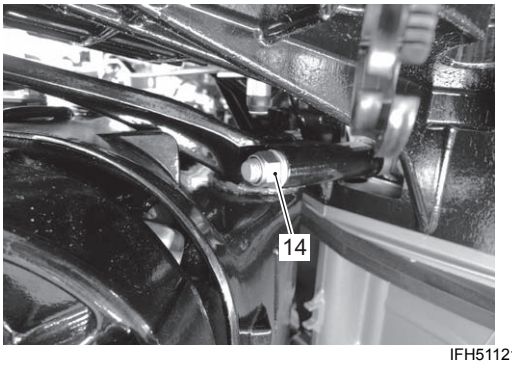

IFH511210005-02

13) Remove driveshaft housing (15) with oil pan (16) and engine holder (17).

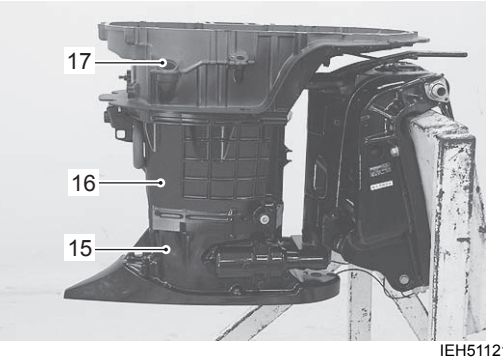

IEH511210065-03

14) Remove the upper side mounts (18).
Remove three bolts and upper mount cover (19).

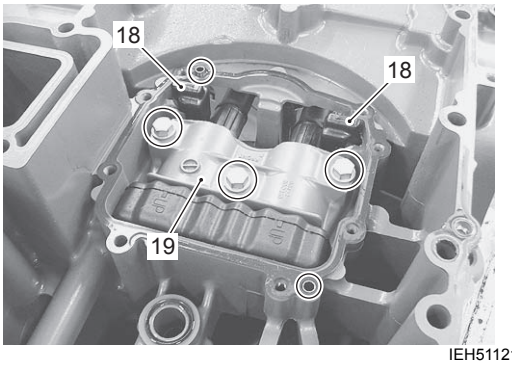

IEH511210075-03

15) Remove upper mounts (20), thrust mount (21), spacer (22) and mount bolts (23).

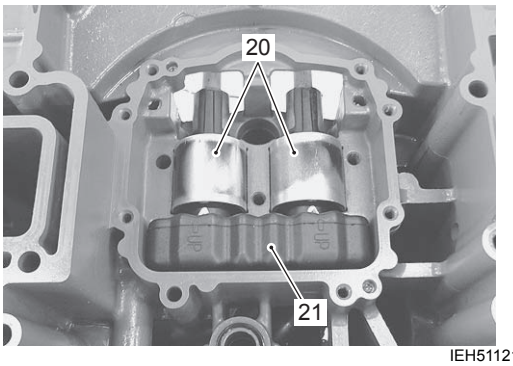

IEH511210076-03

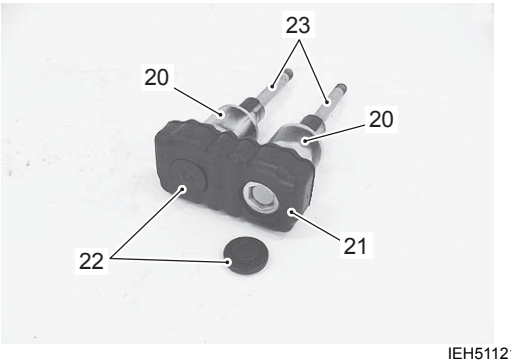

IEH511210077-04

16) Loosen the clamp securing exhaust hose (24), then remove the exhaust hose from exhaust pipe (25). Remove the three bolts securing exhaust relief pipe (26), then remove exhaust relief pipe.

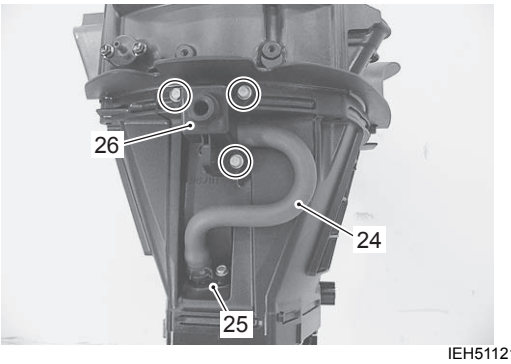

IEH511210078-04

17) Remove two bolts (27) and engine holder cover (28).

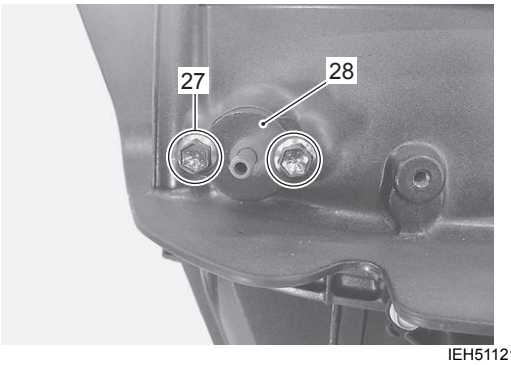

IEH511210079-04

18) Remove three bolts and engine holder (29).

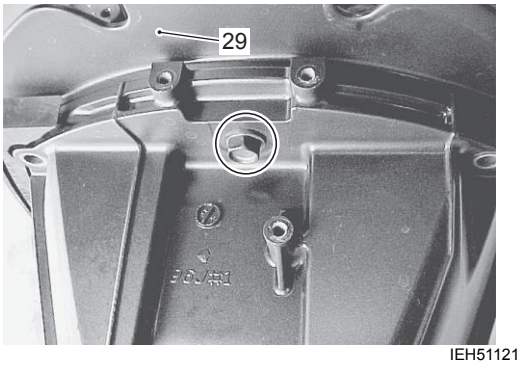

IEH511210080-03

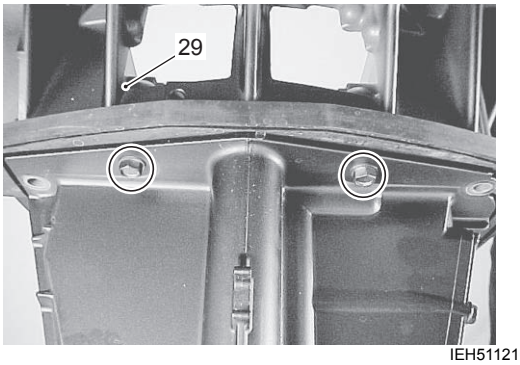

IEH511210081-03

19) Remove six bolts and water jacket cover (30).

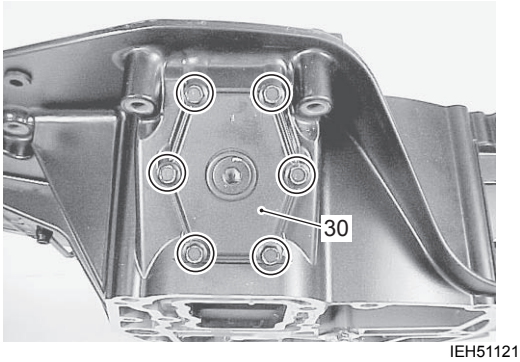

IEH511210082-03

20) Remove three bolts and oil strainer (31).

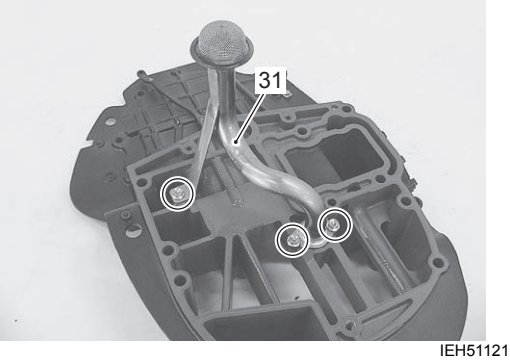

IEH511210083-03

21) Remove eight bolts, then remove oil pan (32) from driveshaft housing (33).

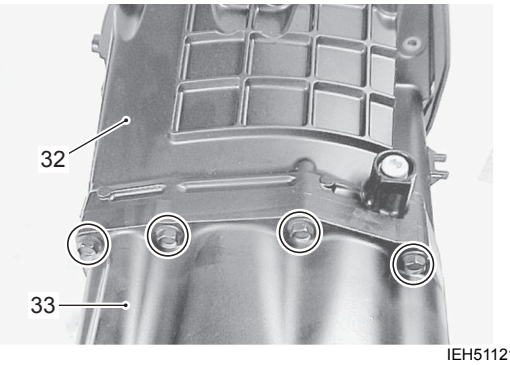

IEH511210084-04

22) Remove six bolts and oil pan water jacket cover (34).

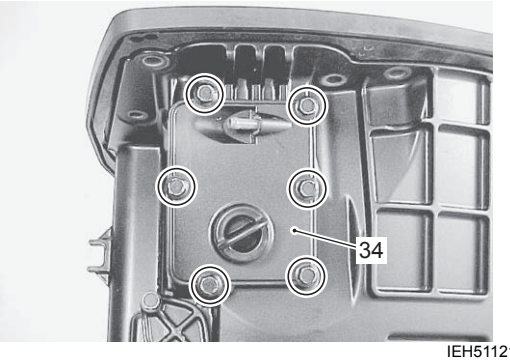

IEH511210085-03

23) Remove bolts, water pressure valve cover (35) and water pressure valve (36).

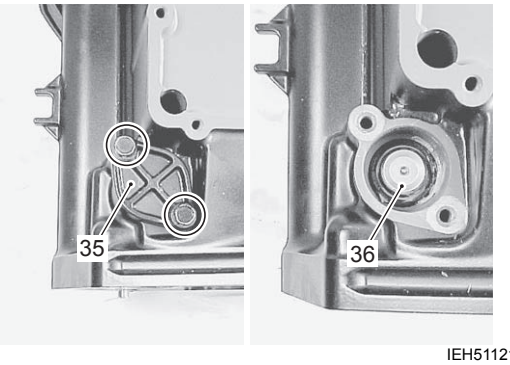

IEH511210086-03

24) Remove dowel pins (37).
Remove water tube (38).

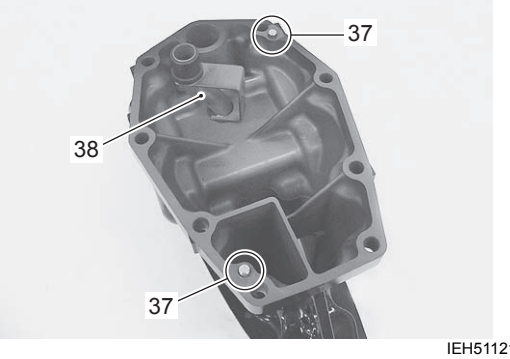

IEH511210087-03

25) Remove bolts and lower mount covers (39).

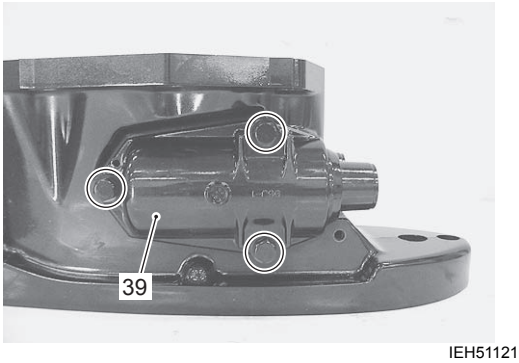

IEH511210088-04

26) Remove lower mounts (40) and lower thrust mount (41).

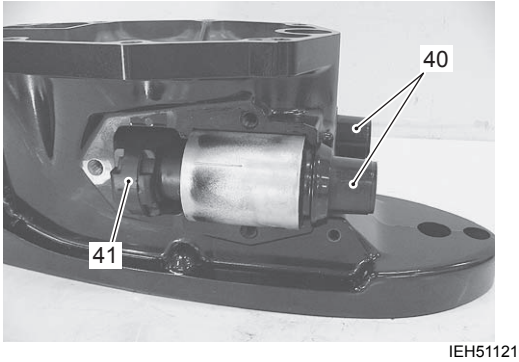

IEH511210089-04

27) Remove the lower side mount (42) from lower mount (40).

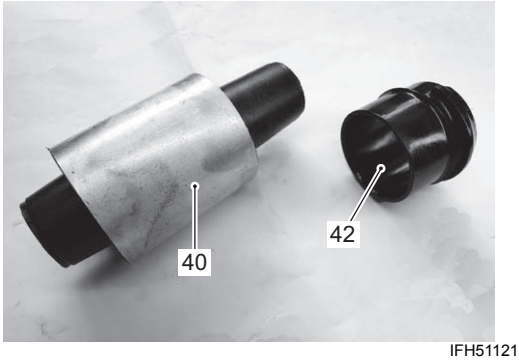

IFH511210006-01

Engine Holder / Oil Pan / Driveshaft Housing / Mounts Assembly

CENFH5112106005

Assembly is reverse order of disassembly with special attention to the following steps.

Lower Mount / Mount Cover

- Assemble the lower mount (2) and lower side mount (3).

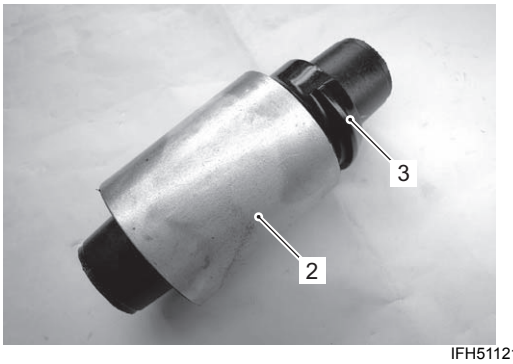

IFH511210007-02

- Install lower thrust mount (1) with the arrow mark facing forward.
- Install lower mounts (2).

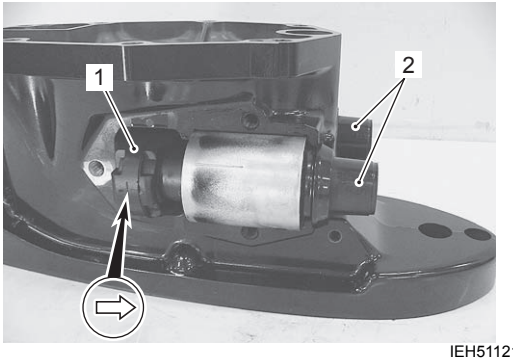

IEH511210090-02

- Install lower mount covers (4).
- Tighten mount cover bolts (5), pre-coated with thread lock, to specified torque.

1342 : Thread lock cement 99000–32050 (SUZUKI Thread Lock 1342 (50 g))

Tightening torque
Lower mount cover bolt (a): 50 N·m (5.0 kgf-m, 36.0 lbf-ft)

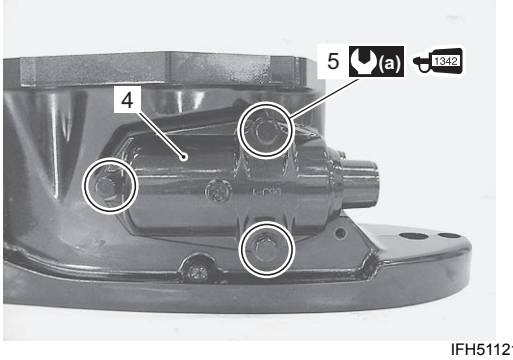

IFH511210012-01

Oil Pan to Driveshaft Housing

- Install water tube (1) to driveshaft housing (2).
- Install two dowel pins (3).
  Apply silicone seal to mating surfaces of driveshaft housing and oil pan.

Si : Sealant 93691–80030 (SUZUKI Silicone Seal (100 g))

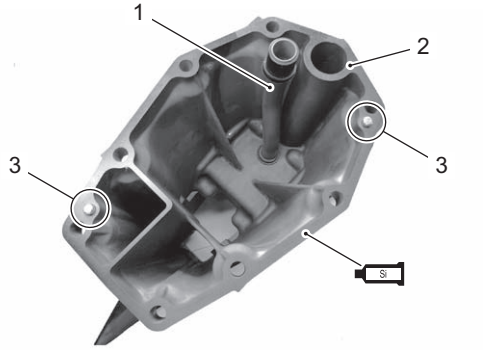

IFH511210008-01

- Install water pressure valve to oil pan.
  Refer to “Water Pressure Valve Removal and Installation” in Section 1F (Page 1F-5).
- Install the oil pan (4) to driveshaft housing (2) by aligning the water tube with the oil pan water passage. Tighten the eight bolts securely.

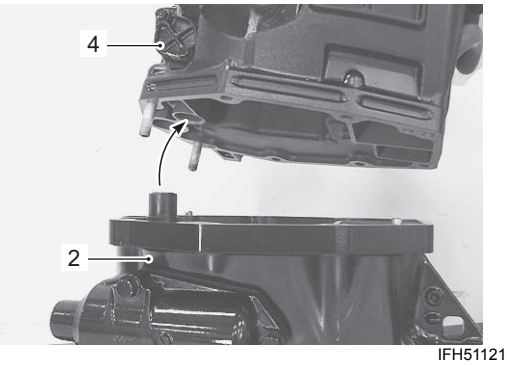

IFH511210029-01

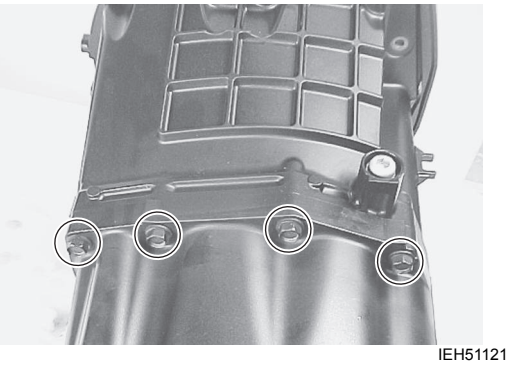

IEH511210115-02

Engine Holder to Oil Pan

- Apply engine oil to O-rings (1), then install O-rings to oil strainer (2).
- Install oil strainer to engine holder (3), then tighten bolts securely.

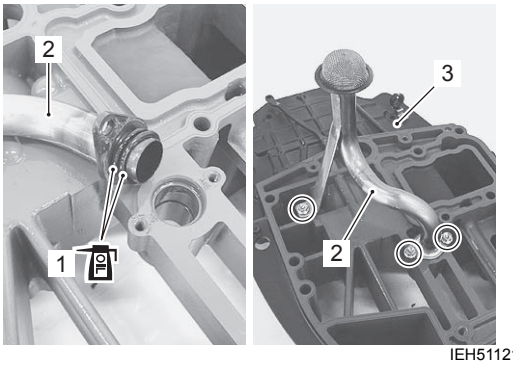

IEH511210095-03

- Install two dowel pins (4) and gasket (5) to oil pan.

NOTICE

Previously used gasket may leak oil and/or cooling water, resulting in engine damage.

Do not reuse gasket. Always assemble with a new gasket.

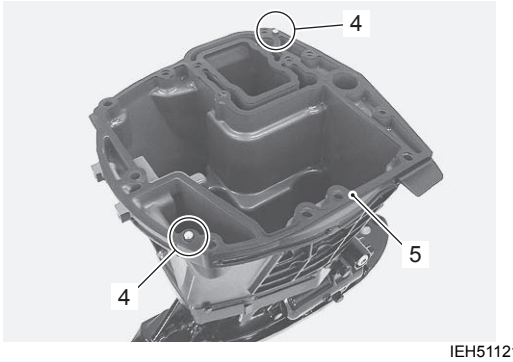

IEH511210096-02

- Install engine holder (3) to oil pan, then securely tighten it with engine holder bolts (6).

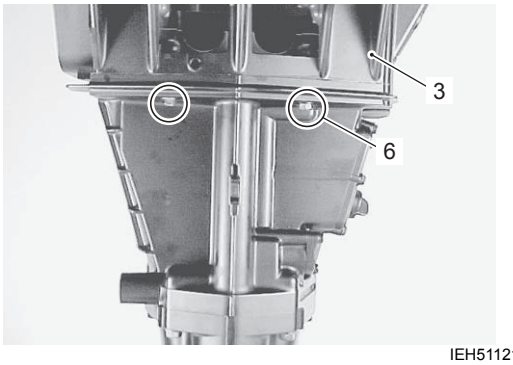

IEH511210097-01

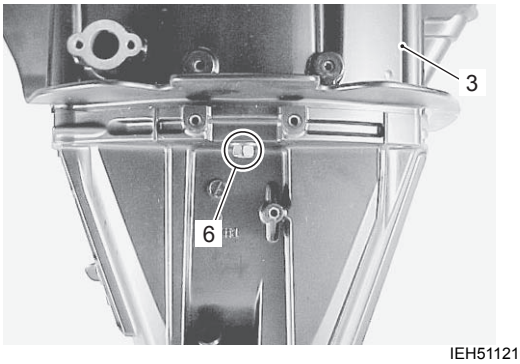

IEH511210098-01

Upper Mount and Mount Cover

- Assemble these items in the following sequence: Place upper thrust mount (1) and upper mounts (2) on upper mount bolts (3).
- Install spacers (4) to thrust mount.

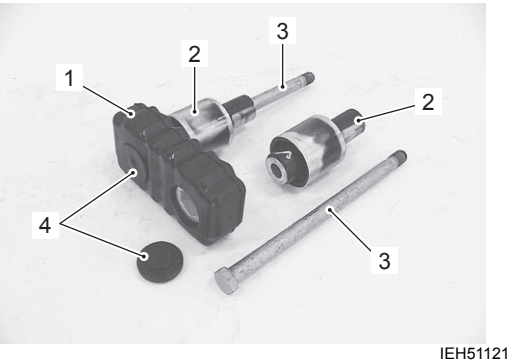

IEH511210099-02

- Place upper mount assembly into position.

NOTE

- **Position the projection “A” on upper mount tube to upper (flywheel) side.**
- **Install upper thrust mount with the lettered mark “UP” facing upward.**

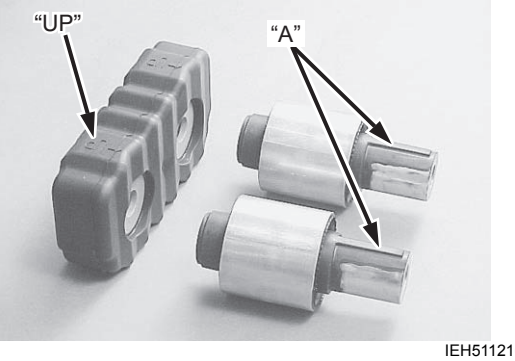

IEH511210100-01

- Install the upper mount cover (5) and tighten the mount cover bolts, pre-coated with thread lock, to specified torque.

  1342 : Thread lock cement 99000–32050 (SUZUKI Thread Lock 1342 (50 g))

  Tightening torque
  Upper mount cover bolt (a): 50 N·m (5.0 kgf-m, 36.0 lbf-ft)

- Install the upper side mounts (6).

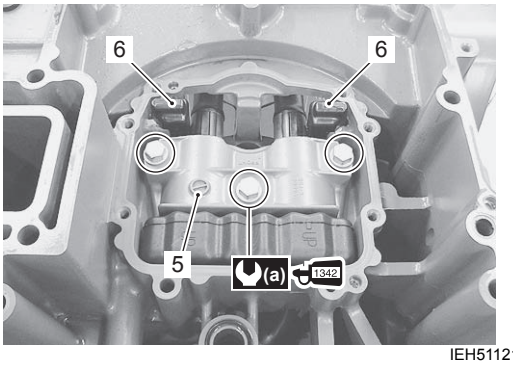

IEH511210101-02

Driveshaft Housing / Oil Pan

- Install driveshaft housing with oil pan and engine holder to steering bracket.
- Install washer (1) and upper mount nut (2), then tighten two nuts, pre-coated with thread lock, to specified torque.

  1342 : Thread lock cement 99000–32050 (SUZUKI Thread Lock 1342 (50 g))

  Tightening torque
  Upper mount nut (a): 100 N·m (10.0 kgf-m, 72.5 lbf-ft)

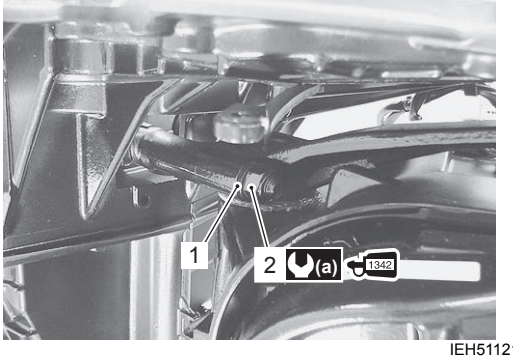

IEH511210066-02

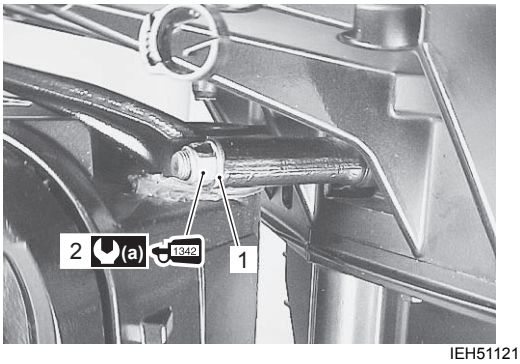

IEH511210067-04

Lower Mount Bolt

- Place washer (1) between lower mount and lower mount bracket.
- Install washer (2) and lower mount bolt (3), then tighten bolt, pre-coated with thread lock, to specified torque.

  1342 : Thread lock cement 99000–32050 (SUZUKI Thread Lock 1342 (50 g))

  Tightening torque
  Lower mount bolt (a): 100 N·m (10.0 kgf-m, 72.5 lbf-ft)

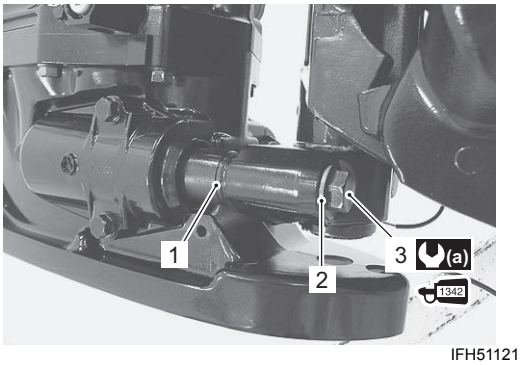

IFH511210020-01

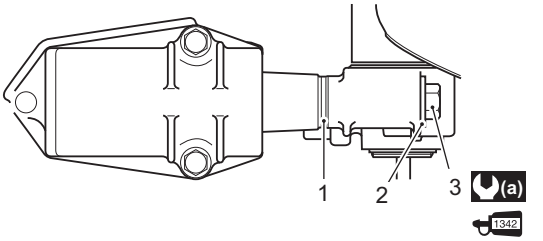

IFH511210021-01

Mount·oil Seal Cover

- Install dowel pins (1) and gasket (2).

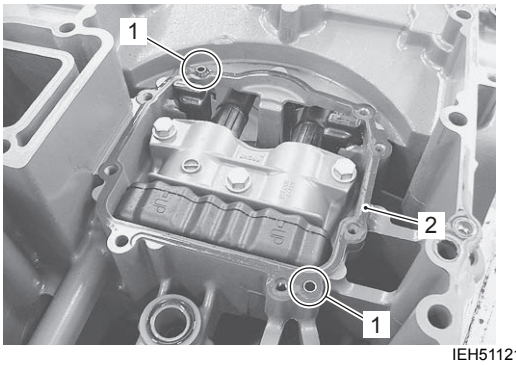

IEH511210111-01

- Install mount·oil seal cover (3), then tighten eight cover bolts securely.
- Apply Water Resistant Grease to oil seal.

: Grease 99000–25350 (SUZUKI Water Resistant Grease EP2 (250 g))

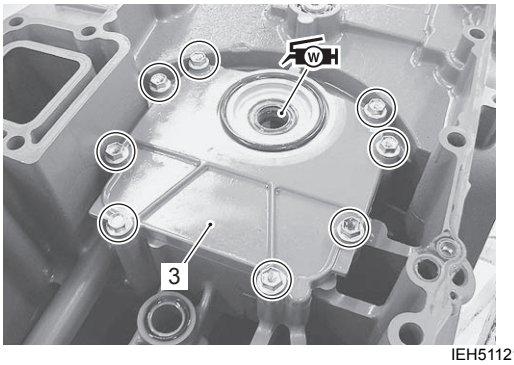

IEH511210112-01

Bonding Wire

- Reattach bonding wire, then tighten screw securely.

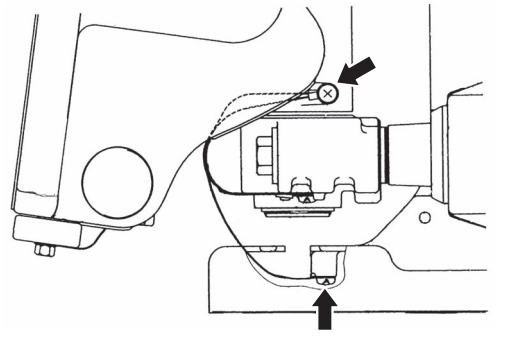

IEH511210072-01

Throttle Lever Holder

- Install throttle lever holder (1) to engine holder, then tighten bolts securely.

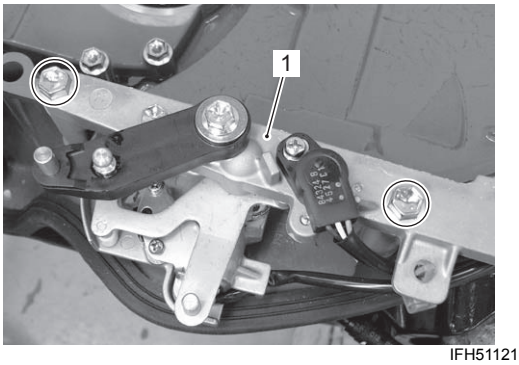

IFH511210022-01

- Install clutch lever shaft arm (2) and E-ring (3).

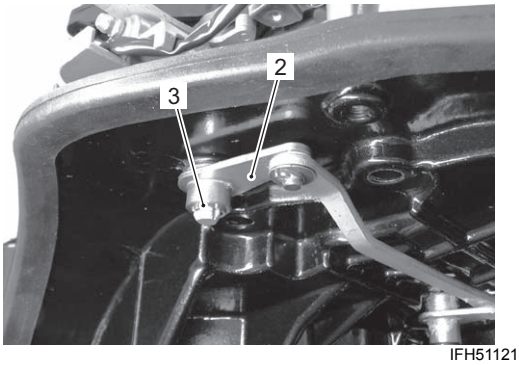

IFH511210023-01

- Install lower unit.
  Refer to “Lower Unit Removal and Installation” in Section 3A (Page 3A-6).
- Install power unit.
  Refer to “Power Unit Removal and Installation” in Section 1D (Page 1D-20).

Engine Holder / Oil Pan / Driveshaft Housing / Mounts Related Component Inspection

CENFH5112106006

Refer to “Engine Holder / Oil Pan / Driveshaft Housing / Mounts Disassembly” (Page 2A-6) and “Engine Holder / Oil Pan / Driveshaft Housing / Mounts Assembly” (Page 2A-10).

NOTE

If any component is found to be excessively worn, cracked, defective or damaged in any way, it must be replaced.

Engine Holder

- Inspect the engine holder. Replace if cracked, damaged, or other abnormal conditions are noted.
- Check water passage. If clogged or obstructed, clean water passage.
- Visually check the clutch shaft bearing. Replace if pitted, noisy, rough or other abnormal conditions are found.
  Refer to “Clutch Shaft Bearing and Oil Seal Replacement” (Page 2A-15).
- Check the clutch shaft oil seal. Replace the oil seal if nicked, cut, worn or other abnormal conditions are found.
  Refer to “Clutch Shaft Bearing and Oil Seal Replacement” (Page 2A-15).

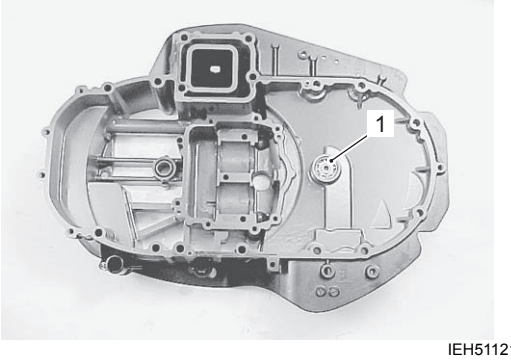

IEH511210007-03

1. Bearing

Mount Oil Seal Cover

- Inspect the mount oil seal cover. Replace the mount oil seal cover if cracked, damaged or other abnormal condition are found.
- Check condition of O-ring. Replace O-ring if nicked, cut, worn or other abnormal condition are found.
- Check condition of oil seal. Replace oil seal if nicked, cut, worn or other abnormal condition are found.
  Refer to “Mount Oil Seal Cover Oil Seal Replacement” (Page 2A-17).

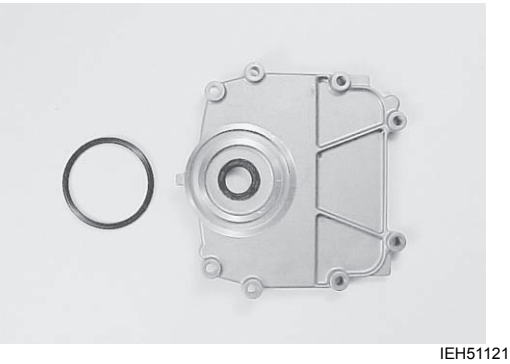

IEH511210008-01

Oil Strainer

- Inspect the oil strainer. Replace the strainer if cracked, damaged or other abnormal conditions are found.
  If clogged or obstructed, clean the oil strainer.
- Check condition of O-ring. Replace O-ring if nicked, cut, worn or other abnormal condition are found.



IEH511210009-02

Oil Pan / Driveshaft Housing

- Check oil pan, driveshaft housing.
  If cracks, defects or other damage is found, replace it.

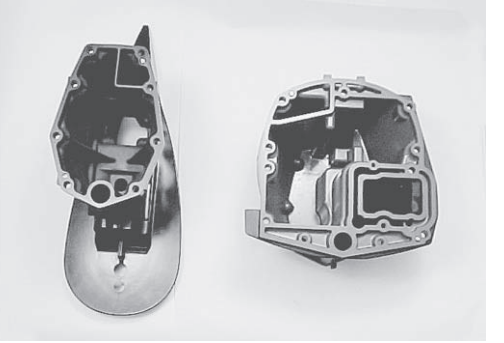

IEH511210010-01

Mounts

- Check upper, lower and thrust mounts.
  If excessive wear, corrosion or other damage is found, replace mount.
- Inspect mount cover. Replace mount cover if cracked, damaged or other abnormal conditions are found.



IEH511210011-01

Water Tube / Water Tube Grommet

- Check water tube.
  If a clog or obstruction is found, clean water tube.
  If cracks, corrosion or other damage is found, replace water tube.
- Check water tube grommet.
  If excessive wear or other damage is found, replace grommet.



IEH511210012-02

Clutch Shaft Bearing and Oil Seal Replacement

CENFH5112106007

1) Remove the engine holder.
   Refer to “Engine Holder / Oil Pan / Driveshaft Housing / Mounts Disassembly” (Page 2A-6).
2) Loosen and remove clutch shaft plug (1).
   Remove clutch shaft (2).
   Remove circlip (3).

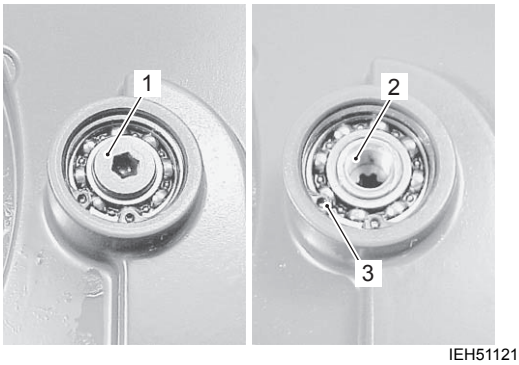

IEH511210014-01

3) Extract oil seal (4) with oil seal remover.

NOTICE

Removing the oil seal can cause damage to the seal lips, causing oil to leak.

Do not reuse oil seal once removed.
Always use a new oil seal.

Special tool
TOOL (A): 09913–50121 (Oil seal remover)

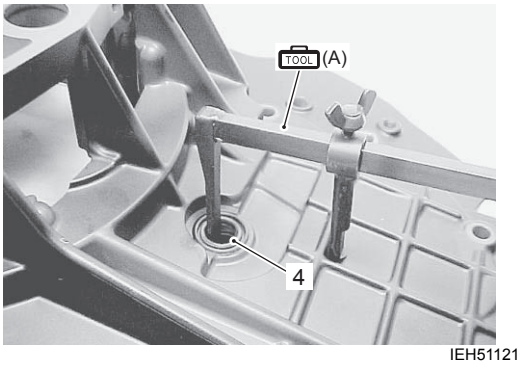

IEH511210013-01

4) Remove bearing (5) with special tool and sliding hammer.

NOTICE

Removing the bearing can cause damage to the ball retainer.
If the removed bearing is re-used, problem will occur in shift system.

Do not reuse the bearing once removed.
Always use a new bearing.

Special tool
TOOL (B): 09923–73210 (Bearing remover)
TOOL (C): 09930–30104 (Sliding hammer)

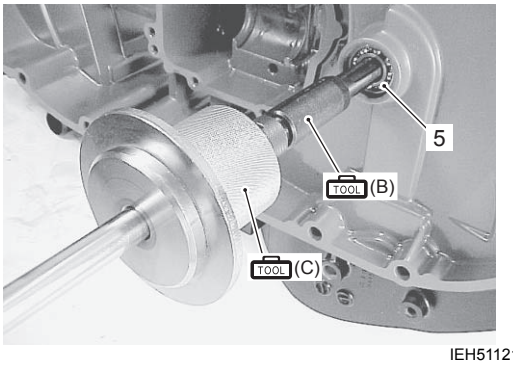

IEH511210015-01

5) Apply engine oil to outer circumference of new bearing (6).
Install bearing (6) into engine holder.



IEH511210016-01

6) Apply water resistant grease to outer circumference of oil seal (7).
Drive oil seal into engine holder.
Apply water resistant grease to the seal lip.

NOTE

Install oil seal as shown in the figure.

W : Grease 99000–25350 (SUZUKI Water Resistant Grease EP2 (250 g))

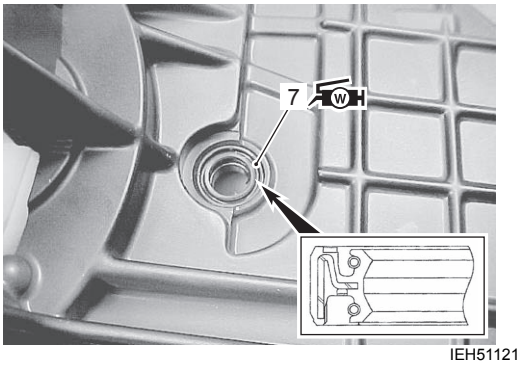

IEH511210017-01

7) Install circlip (3).
Install clutch shaft (2).
Tighten the clutch shaft plug (1), pre-coated with thread lock, to specified torque.

Tightening torque
Clutch shaft plug (a): 20 N·m (2.0 kgf-m, 14.5 lbf-ft)

1342 : Thread lock cement 99000–32050 (SUZUKI Thread Lock 1342 (50 g))

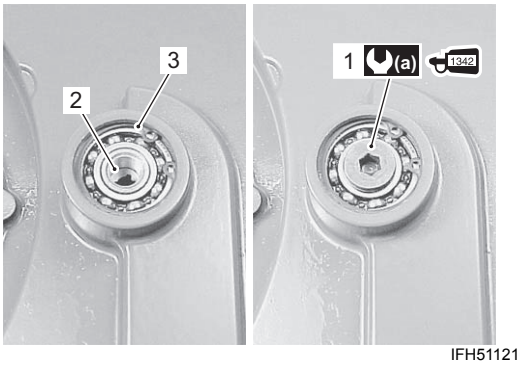

IFH511210024-01

8) Reassemble the engine holder.
Refer to “Engine Holder / Oil Pan / Driveshaft Housing / Mounts Assembly” (Page 2A-10).

Mount Oil Seal Cover Oil Seal Replacement

CENFH5112106008

1) Remove the mount oil seal cover.
   Refer to “Engine Holder / Oil Pan / Driveshaft Housing / Mounts Disassembly” (Page 2A-6).
2) Remove the oil seals (1).

NOTICE

Removing the oil seal can cause damage to the seal lips, causing oil to leak.

Do not reuse oil seal once removed. Always use a new oil seal.

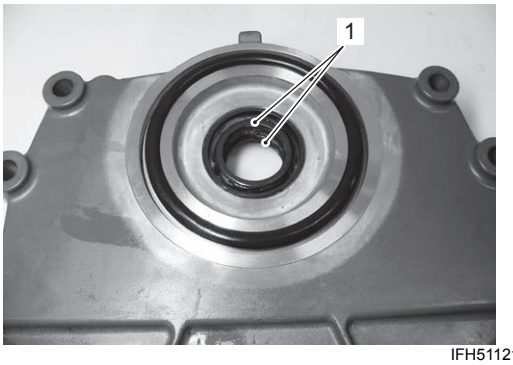

IFH511210025-01

3) Remove the scraper (2).

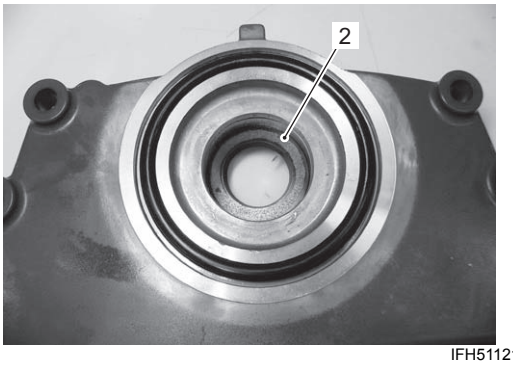

IFH511210026-01

4) Reinstall the scraper (2).

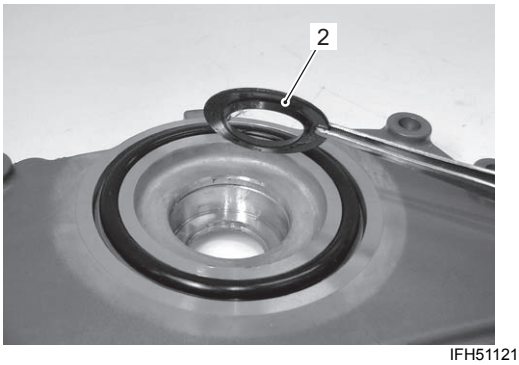

IFH511210027-01

5) Apply water resistant grease to outer circumference of oil seals.
   Drive the two oil seals (one at a time) into the mount oil seal cover.
   Apply water resistant grease to seal lips.

NOTE

Install oil seal with lip (spring side) facing downward (oil pan side).

: Grease 99000–25350 (SUZUKI Water Resistant Grease EP2 (250 g))

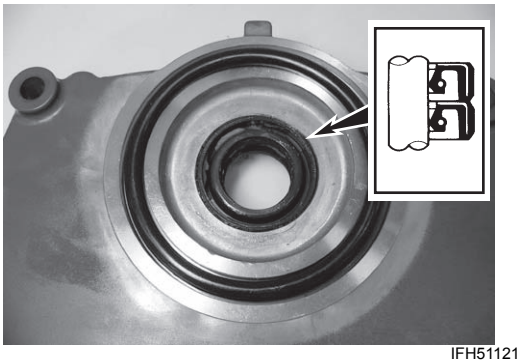

IFH511210028-01

6) Install the mount oil seal cover.
   Refer to “Engine Holder / Oil Pan / Driveshaft Housing / Mounts Assembly” (Page 2A-10).

Clamp / Swivel / Steering Bracket Components

CENFH5112106009

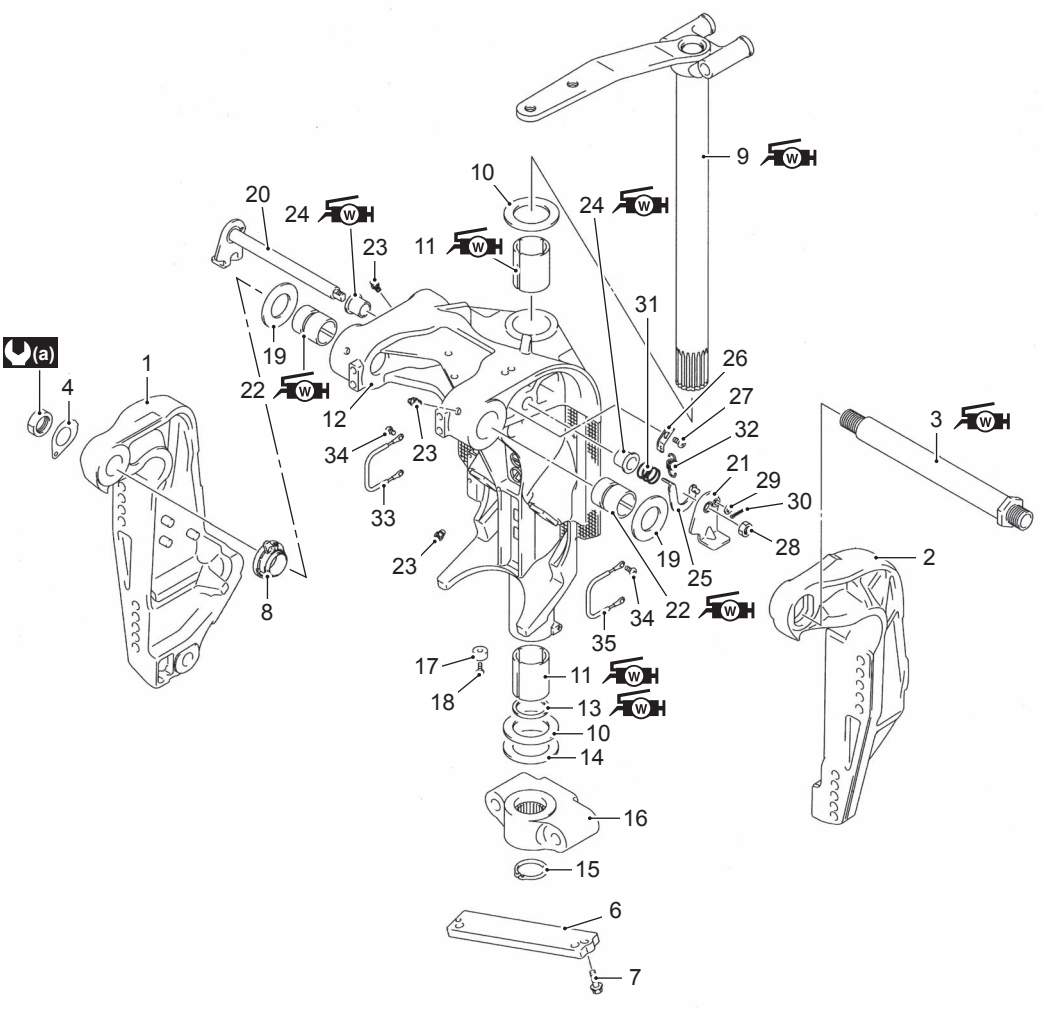

IEH511210113-02

1. Clamp bracket STBD	11. Bushing	21. Tilt lock lever PORT	31. Spring
2. Clamp bracket PORT	12. Swivel bracket	22. Bushing	32. Spring
3. Clamp bracket shaft	13. Seal	23. Grease nipple	33. Bonding wire
4. Washer	14. Shim	24. Bushing	34. Screw
5. Nut	15. Circlip	25. Tilt lock lever link	35. Bonding wire
6. Anode	16. Lower mount bracket	26. Bracket	(a) : 43 N·m (4.3 kgf-m, 31.0 lbf-ft)
7. Bolt	17. Anode	27. Screw	W : Apply SUZUKI water resistance grease.
8. Tilt limit switch cam	18. Bolt	28. Nut	
9. Steering bracket	19. Washer	29. Washer	
10. Washer	20. Tilt lock lever	30. Pin	

Clamp / Swivel / Steering Brackets Disassembly

CENFH5112106010

1) Remove engine holder/oil pan and driveshaft housing.
   Refer to “Engine Holder / Oil Pan / Driveshaft Housing / Mounts Disassembly” (Page 2A-6).
2) Remove screw and bonding wire (1).

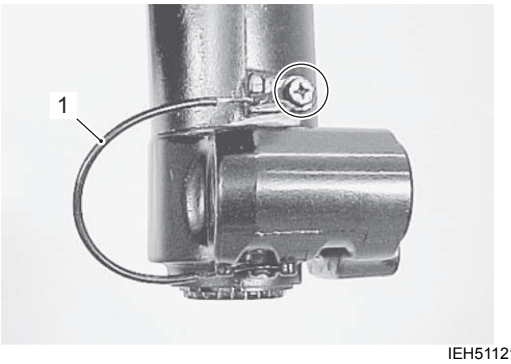

IEH511210021-03

3) Remove circlip (2).

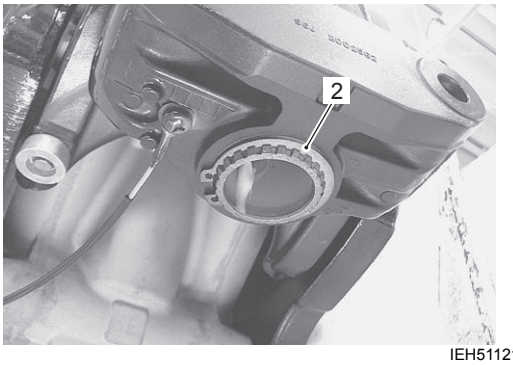

IEH511210022-03

4) Remove lower mount bracket (3), shims (4), and washer (5) from the steering shaft.

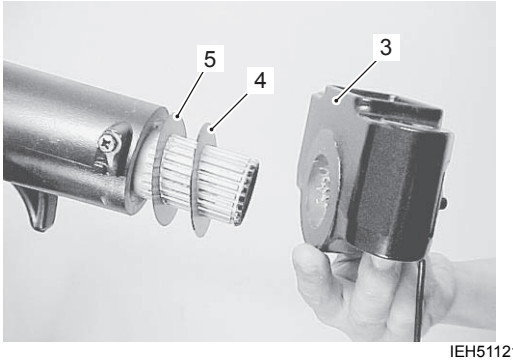

IEH511210023-04

5) Lift steering bracket (6) upward to remove from swivel bracket.
   Remove washer (7) and upper bushing (8).
6) Remove swivel bracket seal (9) and lower bushing (10).

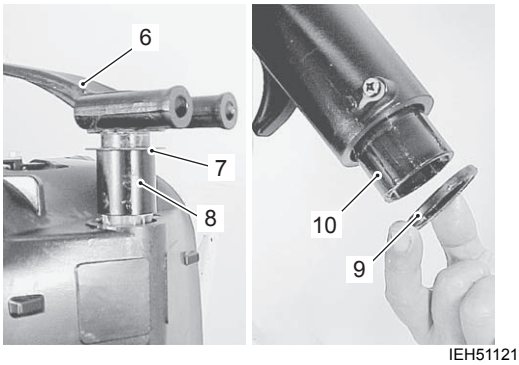

IEH511210024-04

7) Remove two bolts, switch cover (11) and tilt limit switch.
   Cut the cable tie (12) securing switch lead wire.

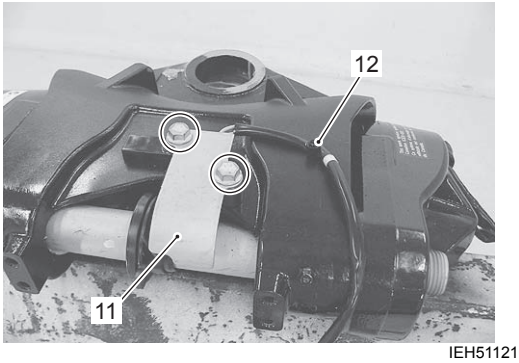

IEH511210025-03

8) Remove tilt limit switch cam (13).

NOTE

Unfasten three stoppers “A” from the tilt limit switch cam to remove it from cam holder.

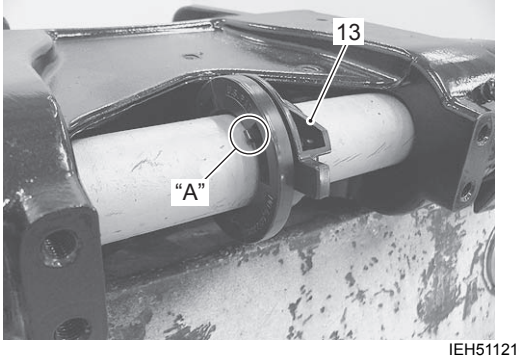

IEH511210026-02

9) Remove upper cam holder (14) and lower cam holder (15) from clamp bracket shaft.

NOTE

Use thin flat screw-driver to release the two hooks to separate the cam holder upper and lower halves.

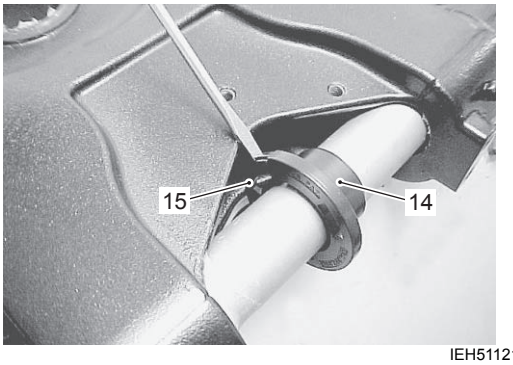

IEH511210027-01

10) Connect the special tool to PTT motor and raise the swivel bracket.

Special tool
TOOL : 09945–79310 (PTT cable extension)

Remove circlip (16) and push out tilt cylinder upper rod (17).

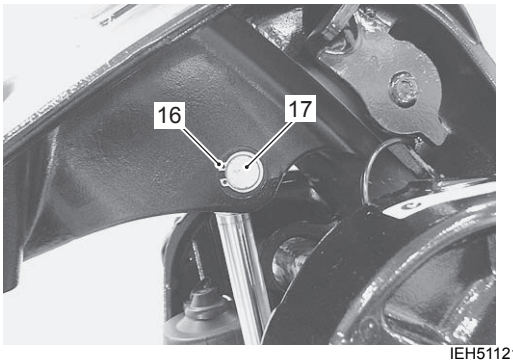

IEH511210028-02

11) Remove bolts and anode (18).

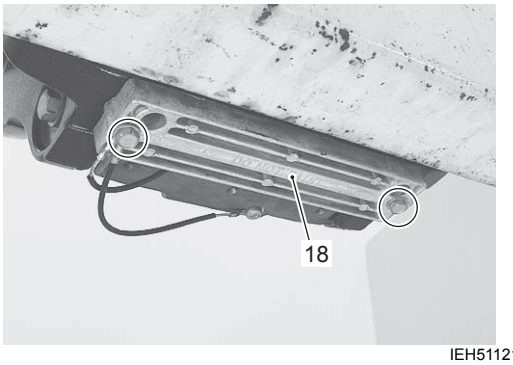

IEH511210029-04

12) Remove bolts (19) securing PTT unit to the STBD and PORT clamp brackets.

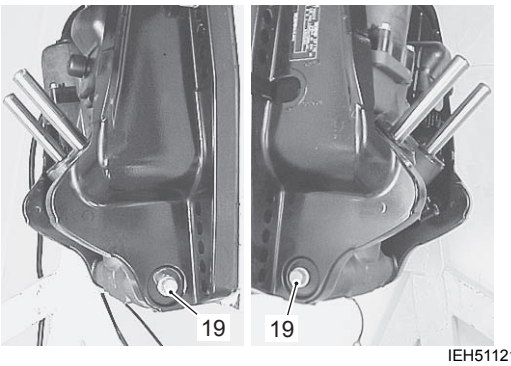

IEH511210030-06

13) Using flat screw-driver, drive locking edge of lock washer (20) to clamp bracket side.

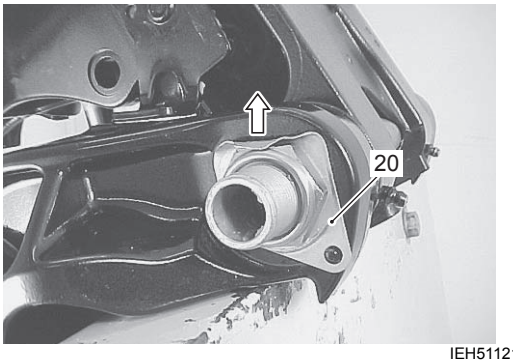

IEH511210031-06

14) Remove the two STBD motor mounting bolts (21). Remove the clamp bracket shaft nut (22) and lock washer (20).

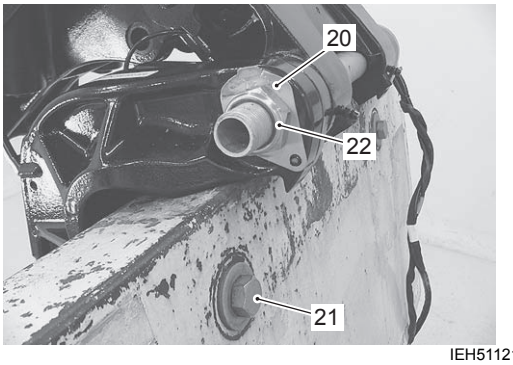

IEH511210032-05

15) Remove the screw (23) securing bonding wire. Slide STBD clamp bracket (24) off clamp bracket shaft, then remove PTT unit (25).

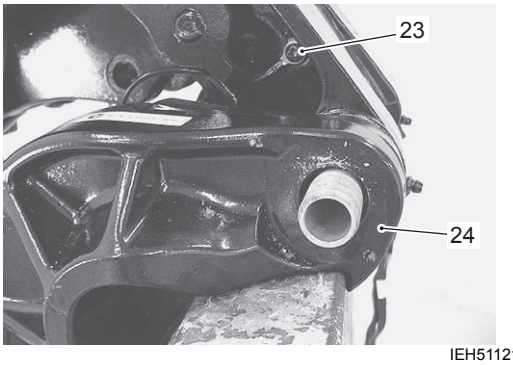

IEH511210033-06

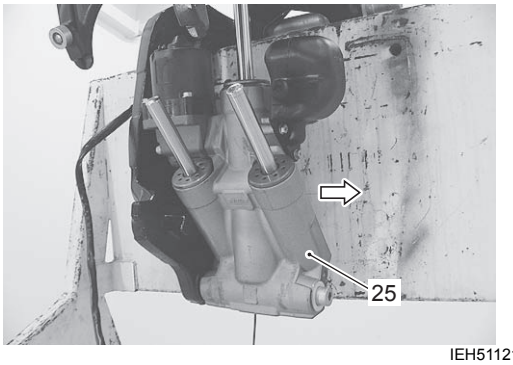

IEH511210104-04

16) Pull PORT clamp bracket (26) outward to remove clamp bracket and bracket shaft (30) from swivel bracket (27).
Remove washer (28) and bushing (29) from each side of swivel bracket.

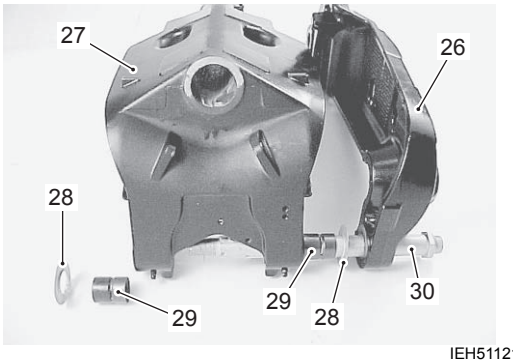

IEH511210034-06

Clamp / Swivel / Steering Brackets Assembly

CENFH5112106011

Assembly is reverse order of disassembly with special attention to the following steps.

Clamp Bracket / Swivel Bracket

NOTE

Before installing clamp bracket to swivel bracket, apply grease to clamp bracket shaft and bushings.

: Grease 99000–25350 (SUZUKI Water Resistant Grease EP2 (250 g))

- Insert PORT and STBD bushings (1) into the swivel bracket (2).

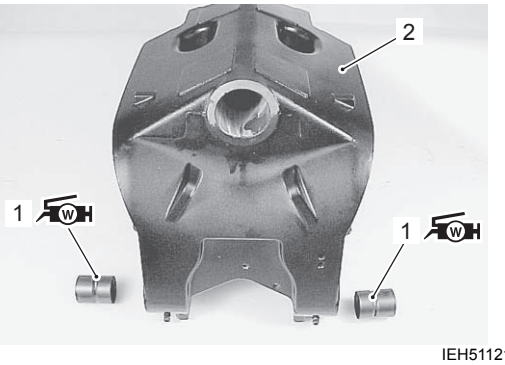

IEH511210035-01

- Assemble PORT clamp bracket (3), washer (4), clamp bracket shaft (5) and swivel bracket (2).

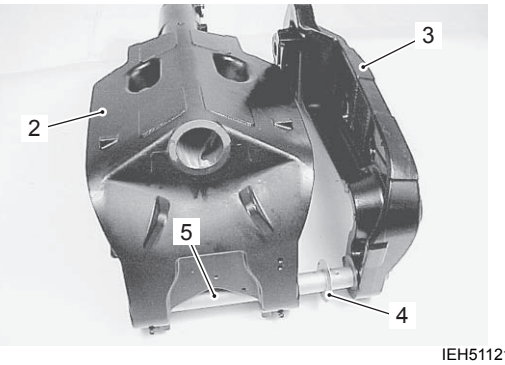

IEH511210036-01

NOTE

For proper operation of the tilt limit device, install the clamp bracket shaft to the port clamp bracket so the red paint mark "A" on the hex section and the cam holder location hole "B" on the clamp bracket shaft are positioned as shown in the figure.

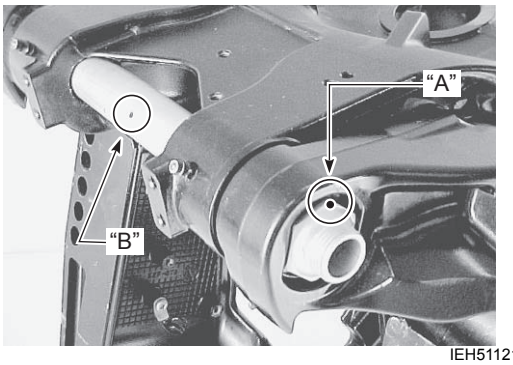

IEH511210037-01

- Install PTT unit assembly.
  Refer to "Power Trim and Tilt Unit Removal and Installation" in Section 2B (Page 2B-14).

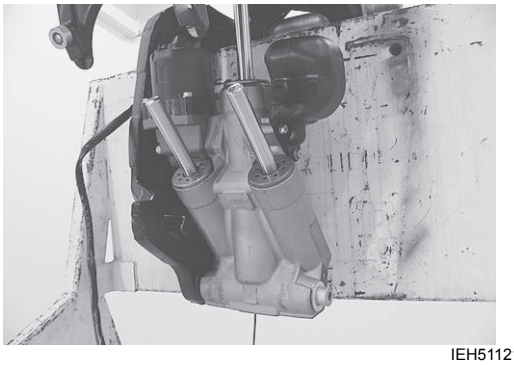

IEH511210114-01

- Install washer (6), STBD clamp bracket (7), lock washer (8) and clamp bracket shaft nut (9), then tighten clamp bracket shaft nut to specified torque.

  Tightening torque
  Clamp bracket shaft nut (a): 43 N·m (4.3 kgf-m, 31.0 lbf-ft)

- After tightening clamp bracket shaft nut to specified torque, bend lock washer edge toward nut to secure nut.

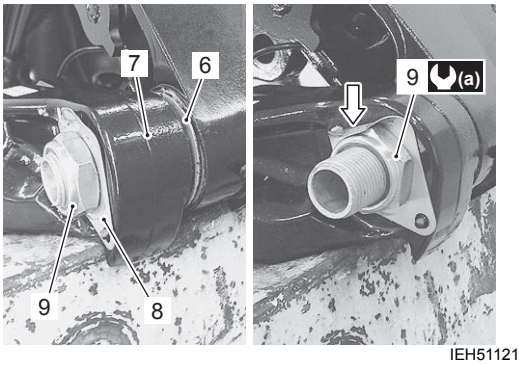

IEH511210039-02

- Tighten two PTT unit retaining bolts (10), pre-coated with thread lock, to specified torque.

  1342 : Thread lock cement 99000–32050 (SUZUKI Thread Lock 1342 (50 g))

  Tightening torque
  PTT retaining bolt (b): 50 N·m (5.0 kgf-m, 36.0 lbf-ft)

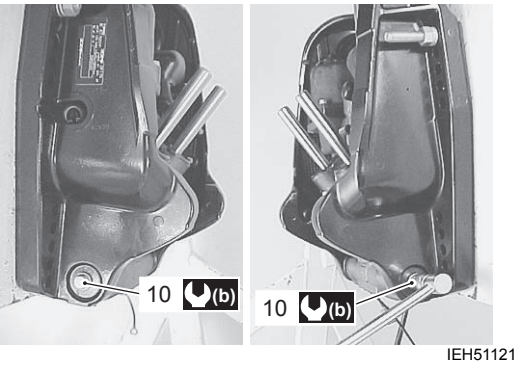

IEH511210040-03

Tilt Limit Device

- Install the lower cam holder (1) engaging its locating pin “A” with the clamp bracket shaft hole “B”, then install the upper cam holder (2).

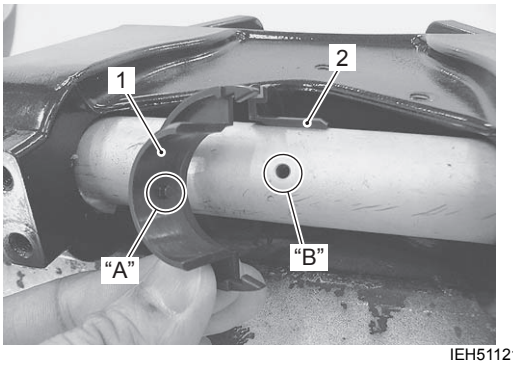

IEH511210041-02

- Install tilt limit switch cam (3).

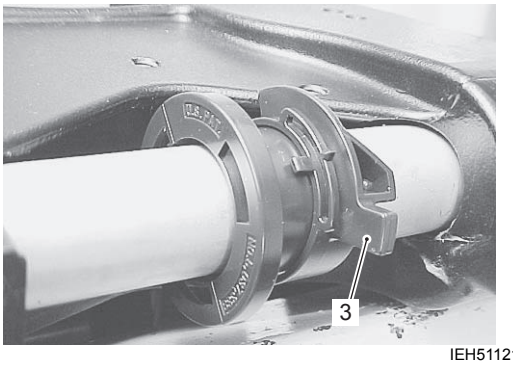

IEH511210042-03

- Install tilt limit switch (4), switch holder (5) and switch cover (6), then secure with bolts.
- Secure switch lead wire with cable tie.

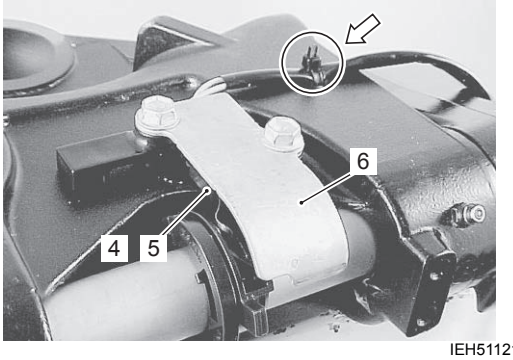

IEH511210043-01

Steering Bracket

- Apply water resistant grease to steering bracket shaft.

: Grease 99000–25350 (SUZUKI Water Resistant Grease EP2 (250 g))

NOTE

Apply water resistant grease to bushings, oil seal lip and pilot shaft portion of steering bracket.

- Install upper bushing (1) and washer (2) to swivel bracket.
- Install lower bushing (3) and swivel bracket seal (4) to swivel bracket.

NOTE

Install seal (4) with lip (spring side) facing downward.

- Install steering bracket (5) to swivel bracket.

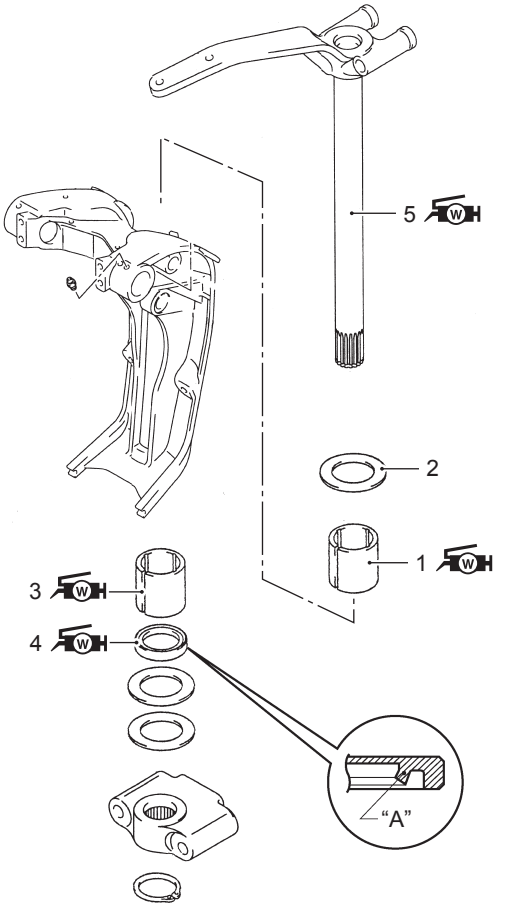

IEH511210044-02

1. Upper bushing	4. Swivel bracket seal
2. Washer	5. Steering bracket
3. Lower bushing	“A”: Seal lip

Lower Mount Bracket

- Install washer (1) and shim (2), and then slide the lower mount bracket (3) upward on the splines until it contacts the shim.

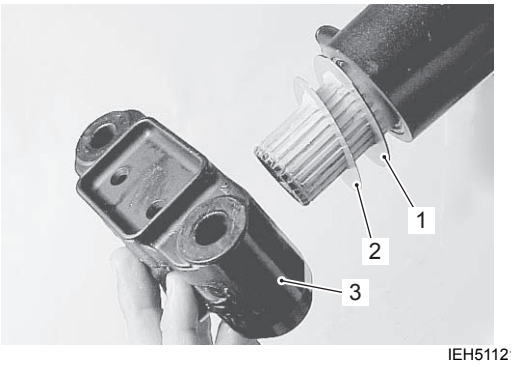

IEH511210045-03

- Install circlip (4) to retain lower mount bracket.

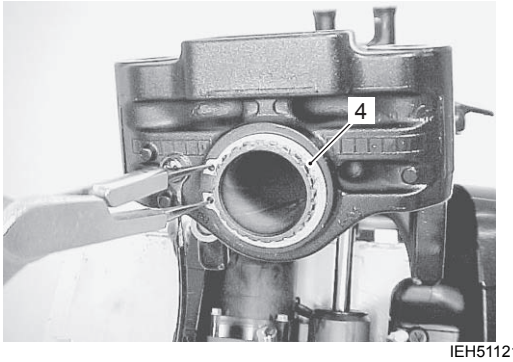

IEH511210046-03

Bonding Wire

Reattach bonding wire to swivel bracket and tighten screw securely.

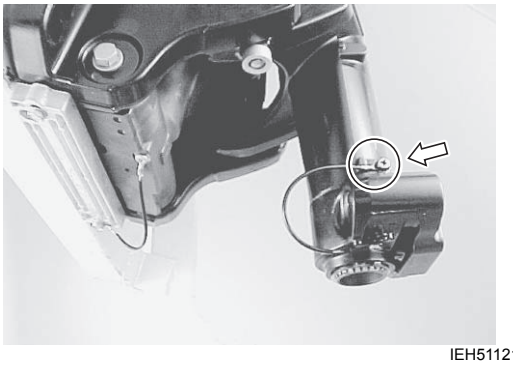

IEH511210047-01

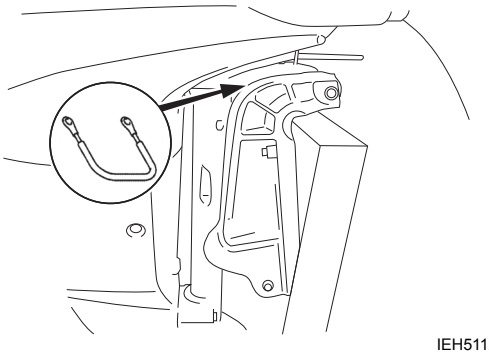

IEH511210048-02

Lubrication

After completing reassembly of the mid unit, apply water resistant grease through each grease nipple.

: Grease 99000–25350 (SUZUKI Water Resistant Grease EP2 (250 g))

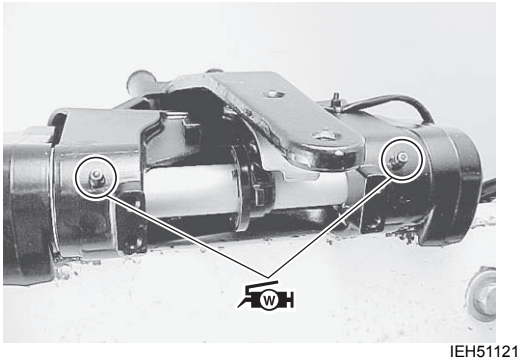

IEH511210049-04

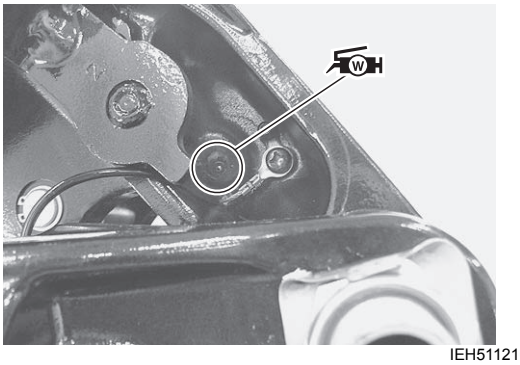

IEH511210050-03



IEH511210051-02

Clamp / Swivel / Steering Brackets Related Components Inspection

CENFH5112106012

Refer to “Clamp / Swivel / Steering Brackets Disassembly” (Page 2A-19) and “Clamp / Swivel / Steering Brackets Assembly” (Page 2A-21).

NOTE

If any component is found to be excessively worn, cracked, defective or damaged in any way, it must be replaced.

Bushings

Check all bushings. If excessive wear or other damage is found, replace bushing. If bushing fit is loose when installing, replace bushing.

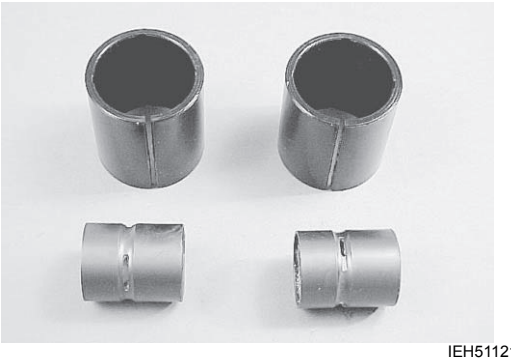

IEH511210052-01

Oil Seal

Check swivel bracket seal. If excessive wear or other damage is found, replace seal.



I9J011210118-01

Clamp Bracket Shaft

Check clamp bracket shaft.

If clamp bracket shaft is bent or twisted, replace shaft.



IEH511210053-01

Bracket

Check clamp brackets, steering bracket and swivel bracket.

If cracks or other damage is found, replace bracket (s).

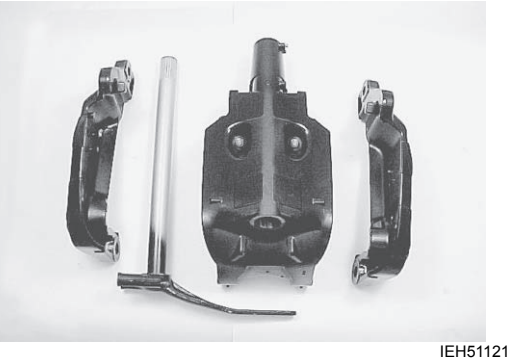

IEH511210054-01

Power Trim and Tilt

Precautions

Precaution for Power Trim and Tilt

CENFH5112200001

⚠ WARNING

Failure to take proper precaution when servicing a PTT unit can cause severe personal injury.

Be sure to take the following precautions when servicing the PTT system:

- **During removal or installation of PTT unit, the engine must be firmly secured and its weight fully supported by the hoist.**
- **Before checking PTT fluid level, tilt the motor to the full-up position and engage the tilt lock lever.**

NOTE

- **To prevent system malfunctions, ensure that all components are kept free from dirt or contamination.**
- **Reinstall all O-rings, seals, springs etc. with the component(s) to which they belong. This will prevent possible confusion and will ensure correct reassembly.**

General Description

Power Trim and Tilt Description

CENFH5112201001

- The power trim and tilt system components are an electric motor, a pump unit, a fluid reservoir and trim/tilt cylinders. The outboard can be trimmed “UP” or “DOWN” while under way, and can be tilted for beaching, operating in shallow water or trailering.
  Trim and tilt “UP” or “DOWN” is obtained by supplying power to a permanent magnet type motor. This motor will rotate clockwise for “UP” or counterclockwise for “DOWN”, according to power delivered via the PTT relay, which is mounted on the electric part holder.

Power Trim and Tilt Hydraulic Diagram

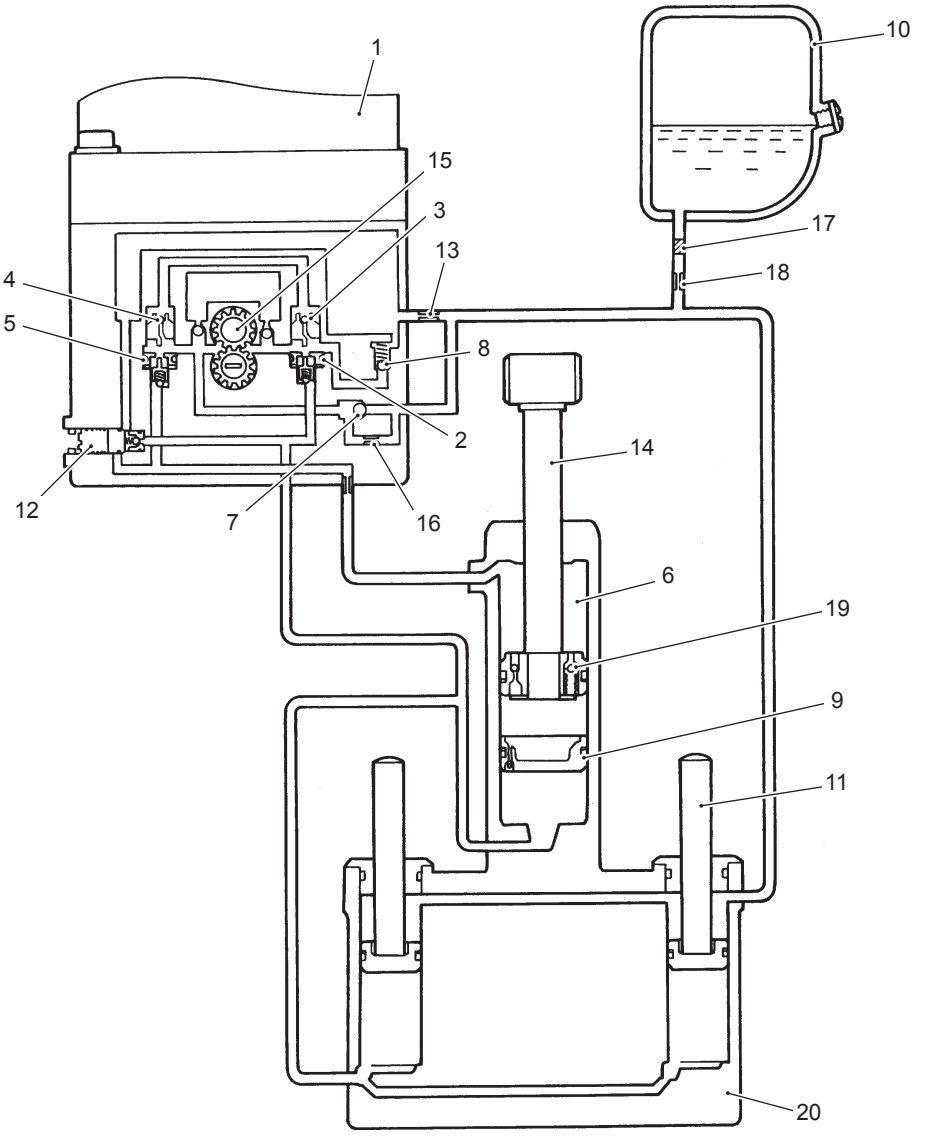

IDG211220029-01

1. PTT motor	8. Up relief valve	15. Gear pump
2. Up check valve	9. Free piston	16. Down relief orifice
3. Up shuttle valve	10. Oil reservoir	17. Filter
4. Down shuttle valve	11. Trim rod	18. Tank room orifice
5. Down check valve	12. Manual release valve	19. Impact relief valve
6. Tilt cylinder Upper chamber	13. Pump room orifice	20. Cylinder body
7. Down relief check valve	14. Tilt rod	

Principles of Power Trim and Tilt Operation Description

CENFH5112201002

By motor operation, the geared pump will be driven, and by turning the motor to the right or to the left, oil flow will change its direction. This causes “UP” and “DOWN” movements of the piston rod of the tilt cylinder and the trim rod of the trim cylinder.

Trim / Tilt Up Circuit

- When the PTT switch is operated “UP” position, the electric motor and gear pump (1) will operation on clockwise direction.
- Pressurized oil will open “Up” check valve (2) and the oil will flow through “Up” shuttle valve (3) to the “Down” shuttle valve (4). Following operation of valve (4), “Down” check valve (5) will open mechanically.
- Pressurized oil flows through the “Up” check valve (2) to the bottom of the trim and tilt cylinders, thereby pushing the trim and tilt pistons upward.
- Residual oil in the upper area of the tilt cylinder (6) is returned to the pump through “Down” check valve (5).
- Any oil in the area above both trim cylinder pistons will be returned to the reservoir.
- Oil will then flow from the reservoir to the pump to stabilize the balance of the oil volumes.
- When the engine is fully tilted up, oil pressure will correspondingly increase in the lower chamber of the tilt and trim cylinders. But, to protect the PTT unit from excessively high pump pressure, the “Up” relief valve (8) begins to open.

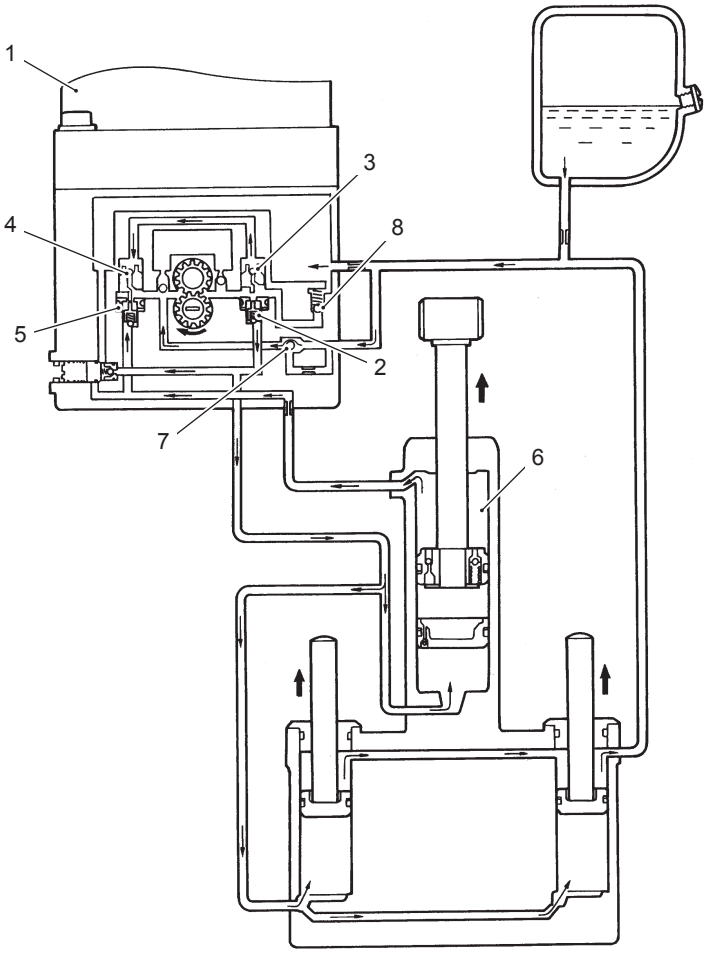

IDG211220030-01

Trim / Tilt Down Circuit

- When the PTT switch is operated in the “DOWN” position, the electric motor will rotate in a counterclockwise direction and turn the gear pump.
- The oil pressure will open the “Down” check valve (1) and oil will be forced through the “Down” shuttle valve (2). When the oil reaches “Up” shuttle valve (3), the “Up check valve (4) will begin to open mechanically.
- The pressurized oil flows through “Down” check valve (1) and then enters the upper area of the tilt cylinder. This thereby forces the tilt rod piston downward.
- When the swivel bracket contacts the trim rams, this pressure forces the trim pistons downward and oil from the reservoir is then able to enter the area above both trim rod pistons.
- Oil from the lower area of the trim and tilt cylinders now returns to the pump through “Up” check valve (4).
- Throughout the tilt action operation range, there is a difference in oil volume between the upper and lower chambers of the tilt cylinder, and any surplus oil is therefore directed to the reservoir by means of the “Down” relief orifice (5).
- Throughout trim operation range, oil will be discharged from the bottom of all three cylinders and the pump will only supply oil to the tilt cylinder. Excess oil is then vented to the reservoir through the “Down” relief orifice (5).
- To prevent damage from excessive oil pressure when all three rods are fully retraced, this pressure is relieved through the “Down” relief orifice (5).

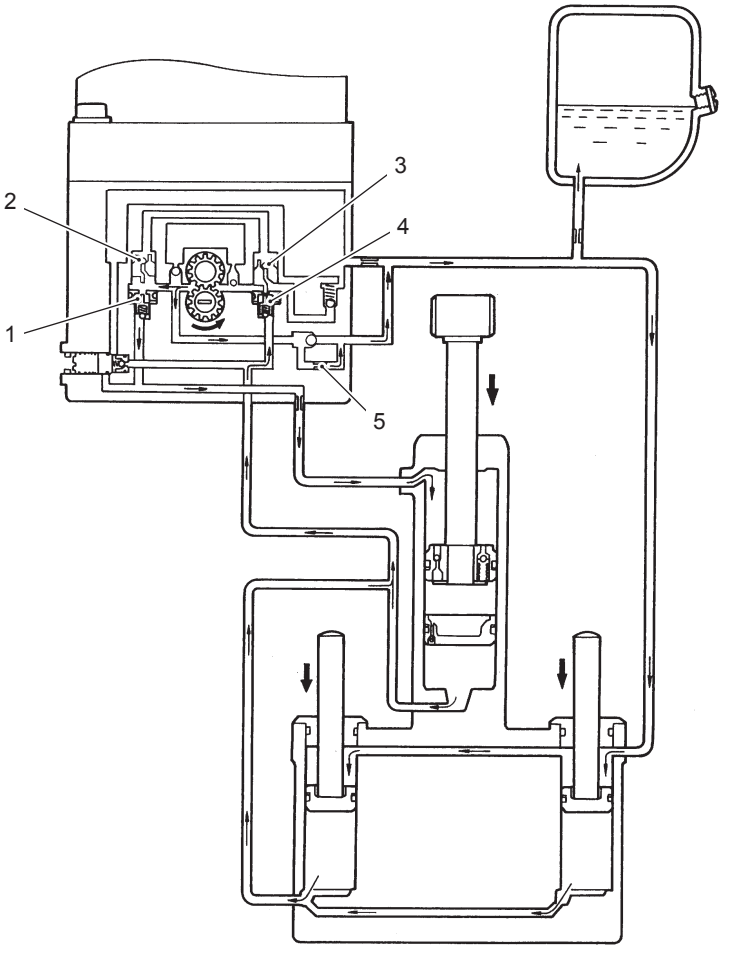

IDG211220031-01

Shock Absorber Circuit

This incorporated safety feature is for protection of the gearcase and prevention of internal PTT pressure build-up in the event of an impact.

- The pressure from a sudden impact will make impact relief valve (1) open, allowing oil from the upper area of the tilt cylinder to flow into the area between the tilt rod piston and the free piston. The tilt rod will then extend.
- When the moment of impact has passed, the PTT DOWN switch must be activated to return the engine to within the normal trim range. When the switch is pressed, the oil between the piston and free piston will be directed to the cylinder upper chamber via the return valve below the tilt piston.

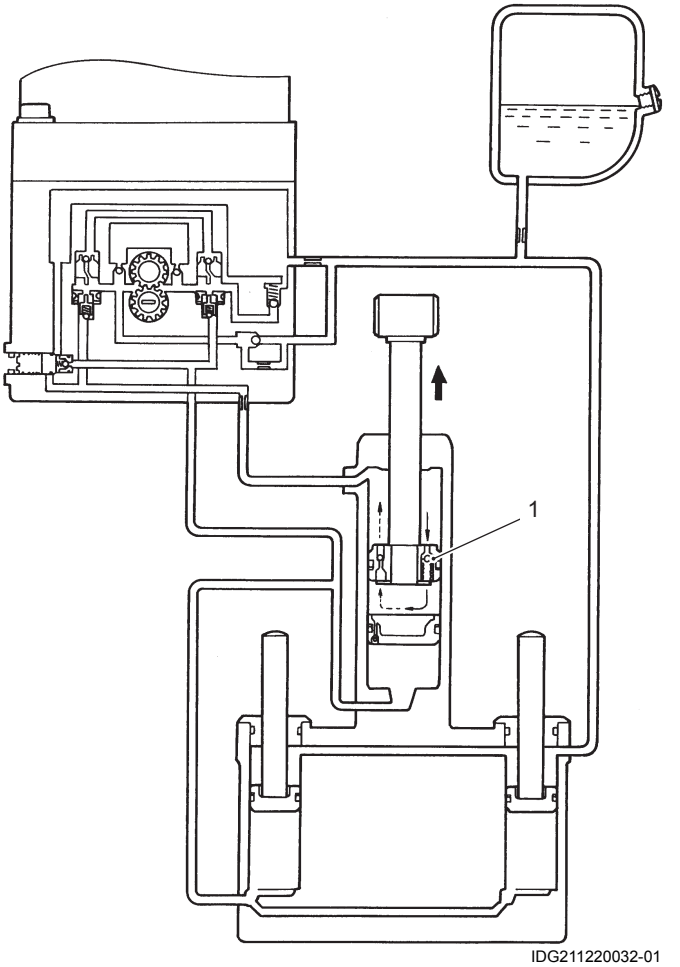

IDG211220032-01

Manual Release Circuit (Down Mode)

- By opening the manual release valve (1), the engine can be lowered manually to a running position. Oil underneath the trim and tilt pistons will be directed through this valve into the area above the tilt rod piston.
- The volume of oil flowing from under the trim rod pistons will be larger than the area above the tilt rod piston can accommodate. Excess oil therefore returns through the manual release valve (1) to the reservoir.

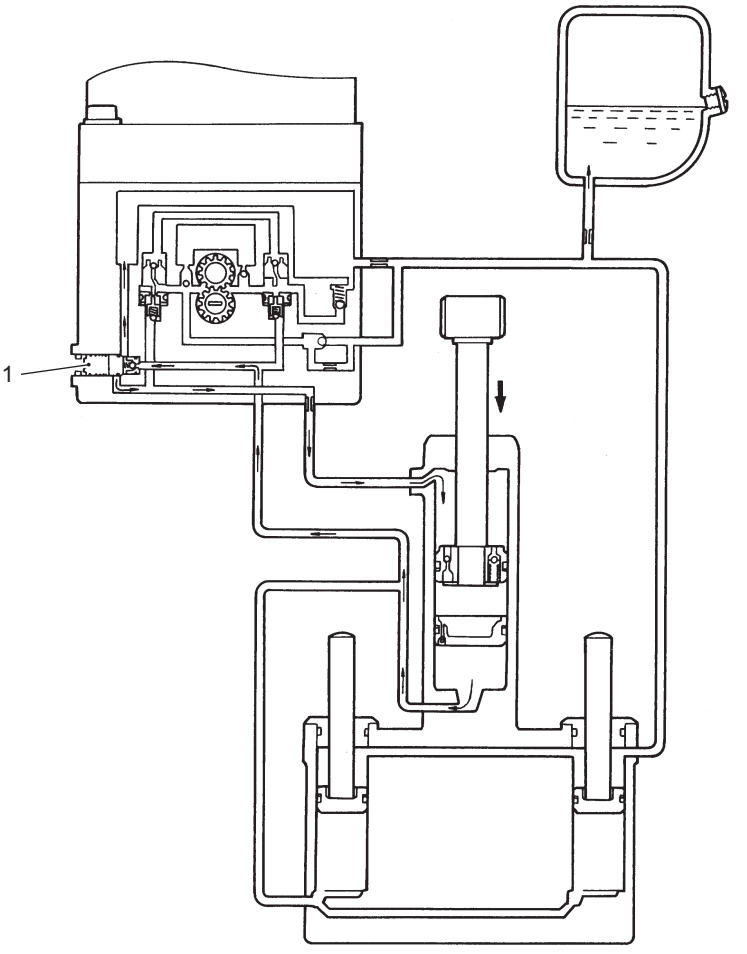

IDG211220033-01

Manual Release Circuit (Up Mode)

- With the manual release valve (1) open, the engine can also be raised manually to the fully tilted position.
- Oil from the upper chamber of the tilt cylinder will flow through valve (1) into the lower chamber of the cylinder.
- The upward movement of the piston rod will increase the cylinder area beneath it, thereby allowing oil from the reservoir to flow into this area.

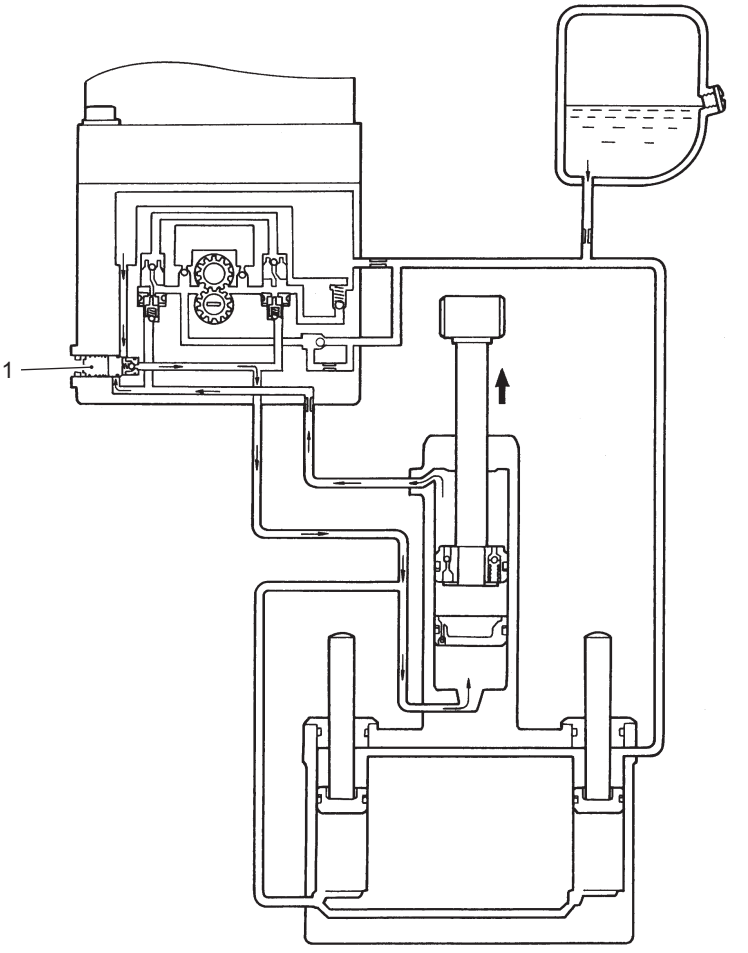

IDG211220034-01

Tilt System Pressure Relief

- If engine speed exceeds approx. 1500 r/min when operating in shallow water drive mode, oil pressure will increase underneath the tilt piston. The relief valve (2) (incorporated in the manual release valve (1)) will then open.
- The oil below the tilt piston will then flow to the reservoir through the relief valve (2).
- As the power of the engine continues to exert downward force on the tilt piston, this will open “Down” check valve (3), thereby allowing oil from the reservoir to flow into the chamber above the tilt piston.
- In this way, high internal pressure is relieved and the engine will slowly tilt downward until it reaches the highest position in the Trim range.

Thermal Expansion Relief

- High ambient temperature will, through thermal expansion, induce a build-up of oil pressure inside the PTT unit.
- Expansion of the oil and the resulting high pressure will open the relief valve (2), thereby providing unit protection by directing oil back to the reservoir.
  Expanded oil in the tilt cylinder upper chamber will return to reservoir passing through impact relief valve (4) → free piston check valve (5) → thermal relief valve (2).

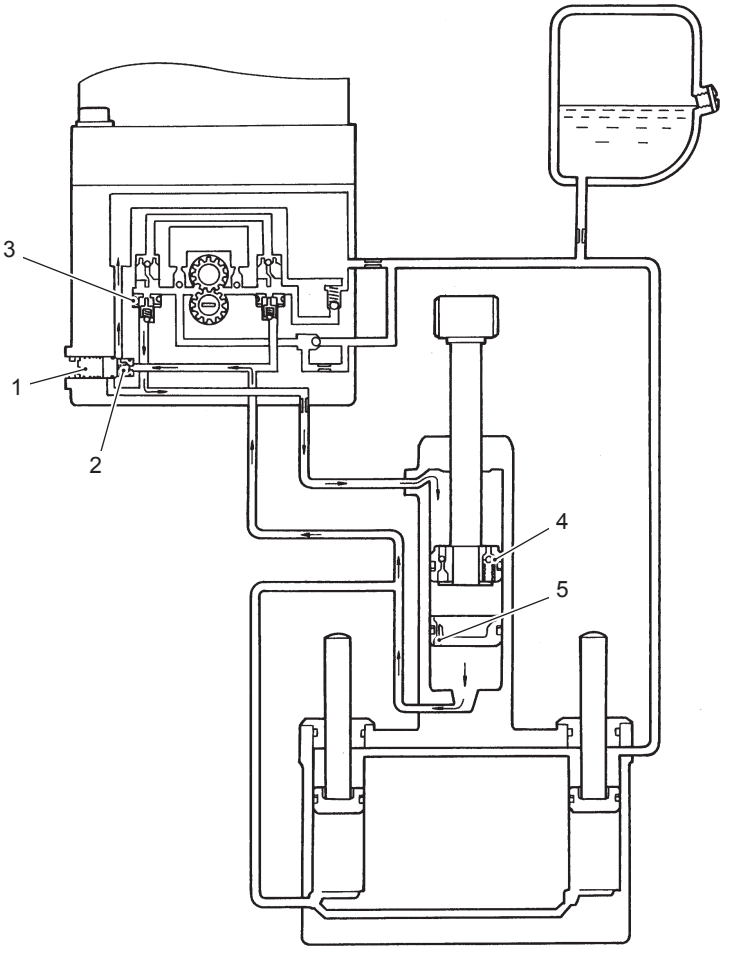

IDG211220035-02

Schematic and Routing Diagram

Power Trim and Tilt System Diagram

CENFH5112202001

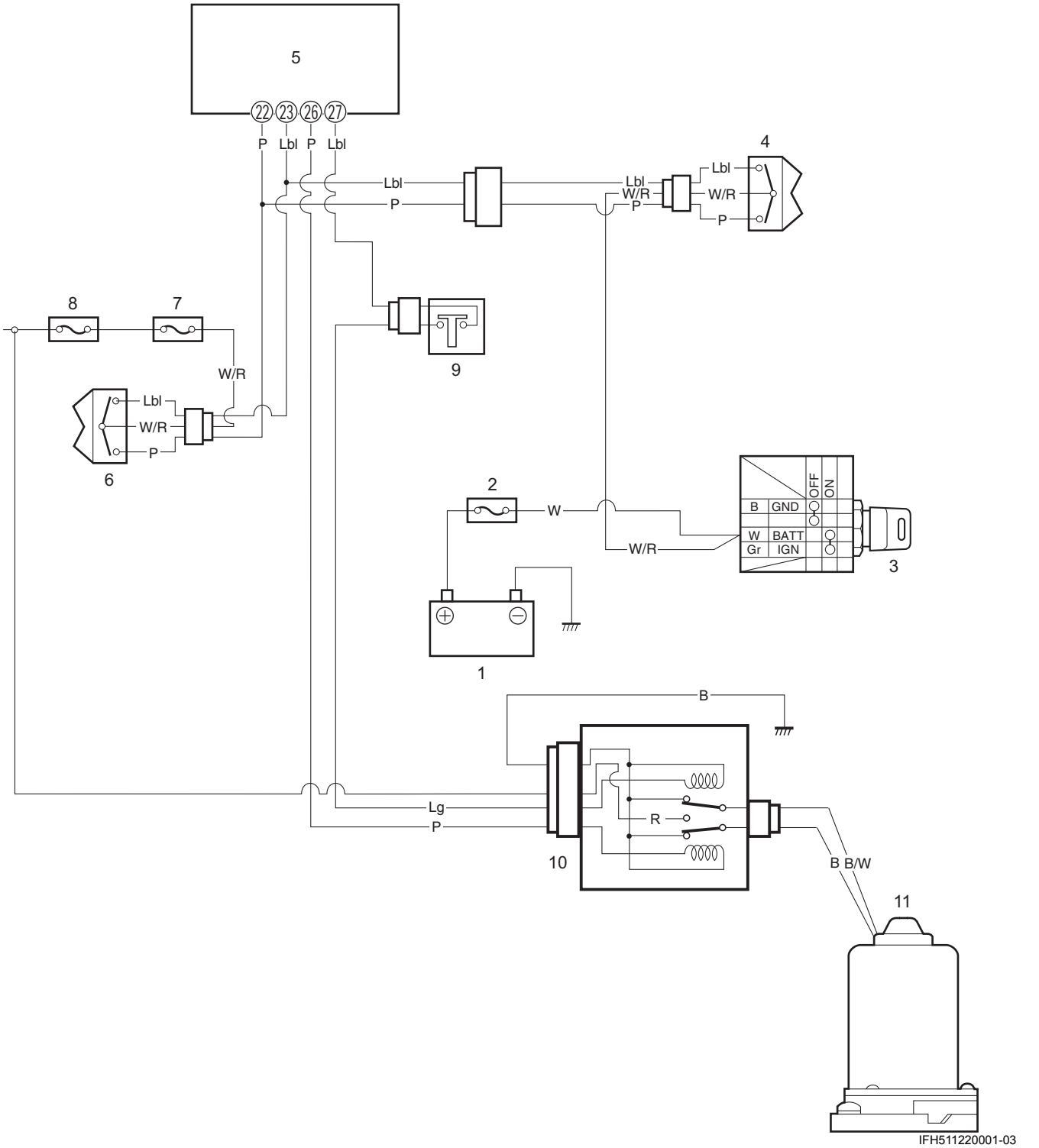

IFH511220001-03

1. Battery	5. ECM	9. Tilt limit switch
2. 15 A fuse	6. PTT switch (side cover)	10. PTT motor relay
3. Ignition switch	7. 10 A fuse	11. PTT motor
4. PTT switch (remote control box)	8. Main fuse 60 A	

PTT System Operation

- The PTT relay is controlled by the ECM.
  The ON/OFF signal for the PTT UP or DOWN is inputted to the ECM PTT relay drive circuit. The input signal is sending from ECM terminals No.22 or 23 and the output signal from terminals No.26 or 27, and they control ON/OFF for PTT relay's UP or Down circuit.
- For the motor trim/tilt UP or DOWN by the PTT relay control circuit in ECM, the battery power must be supplied to ECM with the sub battery cable connected to the main wiring harness.
  Even through any PTT switch is depressed with only the main battery cable connected on these models, the PTT motor will not be operated.
  - When the PTT switch is operated, the following operation takes place:
    With the ignition switch is in OFF position, and the PTT switch is operated, the tilt/trim will be operated.
    With the above mentioned condition, operating the PTT switch will supply a 12 V power to the ECM.
    When this signal is received, the ECM operates the main relay is in ON, allowing the ECM drive signal to feedback to the ECM and the PTT relay circuit.
    Thus the PTT system functions if the PTT switch is operated.
    When the PTT switch signal turns from ON to OFF and a predetermined time has elapsed, the ECM drive voltage will be interrupted automatically.

Diagnostic Information and Procedures

Diagnose PTT System Malfunction

CENFH5112204001

Condition	Possible cause	Correction / Reference Item
Motor will not trim/tilt at all (No up, no down).	Blown fuse for PTT system. (Main: 60 A, PTT switch: 10 A, ECM: 30 A).	*Inspection and replace.*
	Defective PTT switch.	*Replace.*
	Open circuit between main fuse 60 A and PTT relay.	*Repair.*
	Defective main relay.	*Replace.*
	Defective PTT relay.	*Replace.*
	Defective ECM and/or PTT system circuit.	*Inspection of ECM and its circuit in section 1A.*
	Open circuit between main fuse and starter motor magnetic switch.	*Repair.*
	Defective PTT motor armature.	*Replace.*
	Defective PTT motor armature brushes.	*Replace.*
	Defective PTT pump.	*Replace.*
	Manual release valve leaking.	• *Ensure that valve is fully closed.* • *Inspect manual release valve.*
Motor will not trim/tilt up.	Defective PTT switch.	*Replace.*
	Defective PTT relay.	*Replace.*
	Open light blue lead wire circuit.	*Repair or replace.*
	Defective ECM.	*Replace.*
Motor will not trim/tilt down.	Defective PTT switch.	*Replace.*
	Defective PTT relay.	*Replace.*
	Open pink lead wire circuit.	*Repair or replace.*
	Defective ECM.	*Replace.*
PTT motor operates, but no motor trim/tilt movement.	Low PTT fluid level.	*Added PTT fluid.*
	Manual release valve leaking.	• *Ensure that valve is fully closed.* • *Inspect manual release valve.*
	Debris in system.	*Inspect for debris.*
	Broken drive joint in PTT pump.	*Replace.*
	Broken PTT pump.	*Replace.*
	Tilt piston leaking.	• *Replace PTT unit assembly.* • *Inspect tilt/trim rod seal(s).*
Motor will not retain selected trim and tilt setting, creeps downward.	Manual release valve leaking.	• *Ensure that valve is fully closed.* • *Inspect manual release valve.*
	Tilt piston leaking.	• *Replace PTT unit assembly.* • *Inspect tilt/trim rod seal(s).*
	Debris in system.	*Inspect for debris.*
PTT motor operates at higher than normal speed, or with high pitched "squealing" sound. No trim/tilt action.	Low PTT fluid level.	*Added PTT fluid.*
	Manual release valve leaking.	• *Ensure that valve is fully closed.* • *Inspect manual release valve.*
	Broken drive joint in PTT pump.	*Replace.*

Service Instructions

Checking PTT Fluid Level

CENFH5112206001

1) Raise the engine to a full-tilt up position.
2) Lower the manual tilt lock lever (1).

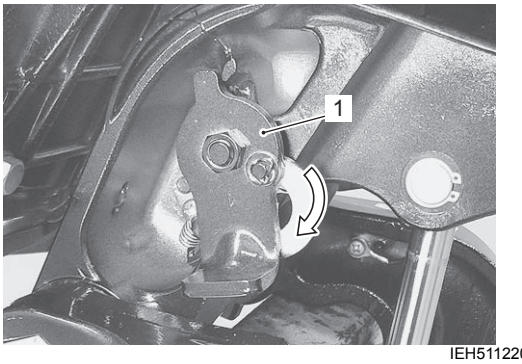

IEH511220031-01

3) Remove the oil filler plug (2).

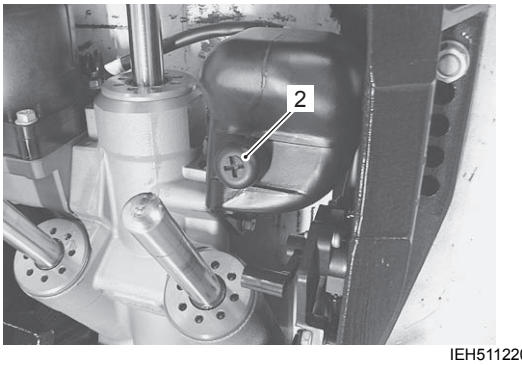

IEH511220003-02

4) If oil can be seen at filler plug level, the reservoir is full.
If fluid level is low, refill with the recommended PTT fluid.

NOTICE

Mixing of different fluids may cause chemical reaction and deterioration.

To ensure consistent pump operation, never mix different types of PTT fluid.

Recommended PTT fluid

- **99000-22810 (PTT Fluid (1 Liter))**
- **Dexron III automatic transmission fluid or equivalent**

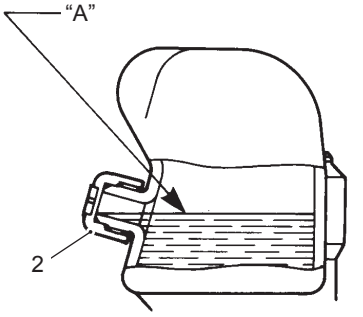

IDG211220039-02

"A": Oil level (when full tilted)

5) Reinstall oil filler plug (2).

Air Bleeding from PTT Unit

CENFH5112206002

1) Check that the manual release valve (1) is tightened to the specified torque.

NOTE

Do not over tighten manual release valve.

Tightening torque
Manual release valve (a): 3.5 N·m (0.35 kgf-m, 2.5 lbf-ft)

Direction of rotation
Counterclockwise: Open
Clockwise: Close



IEH511220004-02

2) Operate the PTT switch, raising and lowering the motor up and down (full tilt position to full trim down position) 4 to 5 times.

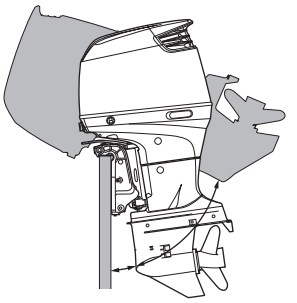

IEH511220032-01

3) Check PTT fluid level, topping off if necessary.
4) Reinstall oil filler plug.

Setting Trim Down Position Limit

CENFH5112206003

Once the ECM has been replaced or the trim sensor removed and reinstalled, the resetting of the trim down position limit should be performed.
Perform this set-up after the current position setting has been cancelled, as explained in the following procedure.

NOTE

The tilt upper limit should be adjusted by the tilt limit cam (switch).

Canceling The Trim Down Position Limit Setting

1) Turn the ignition key to the “ON” position.
Lower the motor until trim position.
2) Pull out the emergency stop switch lock plate.
3) Make sure that remote control handle is in “Neutral”. (Check that the neutral switch is in the “ON” position.)

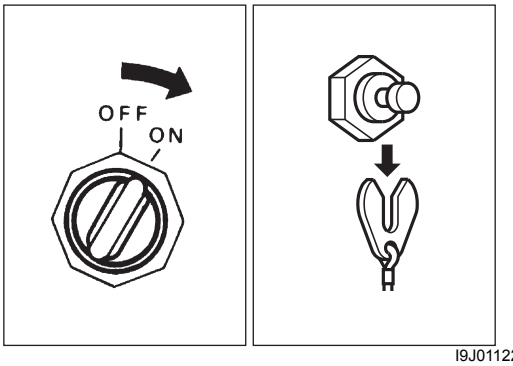

I9J011220054-01

4) **Top mount type:**
Using the throttle only function of the remote control box, move the control handle forward until the caution buzzer sounds one time.
Side mount type:
Using the throttle only function of the remote control box, move the warm-up lever upward until the caution buzzer sounds one time.

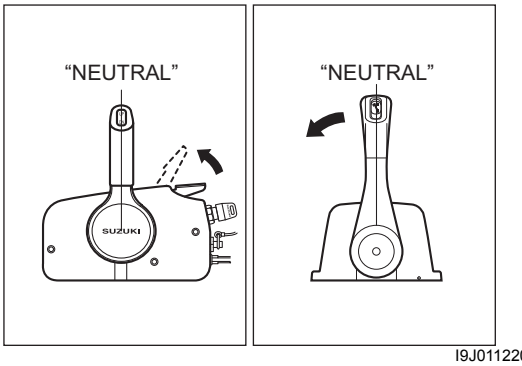

I9J011220055-01

5) Press the “DOWN” side of the PTT switch for three seconds and the buzzer will sound two times briefly indicating the setting has been canceled.

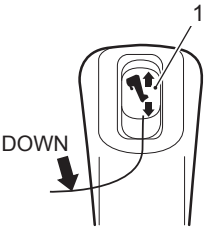

I9J011220056-03

1. PTT switch

6) Return the throttle to the fully closed position.

Setting The Trim Down Position Limit

1) Make sure that Ignition key is ON.
2) Press the “DOWN” or “UP” side of the PTT switch so that the optimum full trim down position for the boat can be obtained.
3) Pull out the emergency stop switch lock plate.
4) Make sure that remote control handle is in “Neutral”. (Check that the neutral switch is in the “ON” position.)

5) **Top mount type:**
Using the throttle only function of the remote control box, move the control handle forward until the caution buzzer sounds one time verifying the set mode is active.
Side mount type:
Using the throttle only function of the remote control box, move the warm-up lever upward until the caution buzzer sounds one time verifying the set mode is active.

6) Press the “DOWN” side of the PTT switch three times within three seconds. The buzzer will sound one time briefly indicating the setting has been accepted.

7) Return the throttle to the fully closed position and install the lock plate on the emergency switch. Operate the full tilt up and full trim down operations several times by pressing the PTT switch and check that the setting of the down limit is properly set.

Power Trim and Tilt Unit Removal and Installation

CENFH5112206004

Removal

1) Remove the lower side covers.
Refer to “Lower Side Cover Removal and Installation” in Section 2A (Page 2A-3).

2) Raise the engine to the full tilt up position and lower the manual tilt lock lever (1).

⚠ WARNING

Failure to take proper precaution when servicing a PTT unit can cause severe personal injury.

During the removal or installation of PTT unit, the engine must be firmly secured and its weight fully supported by the hoist. (See below)

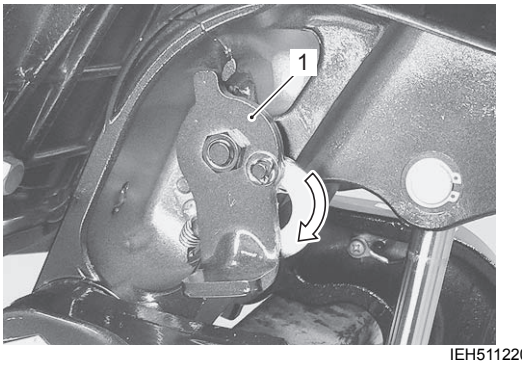

IEH511220033-01

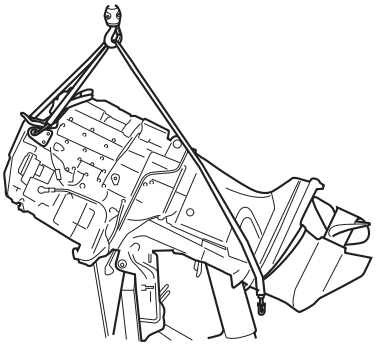

IEH511220010-01

3) Remove the tilt rod snap ring (2) and push the tilt rod upper shaft pin (3) out.

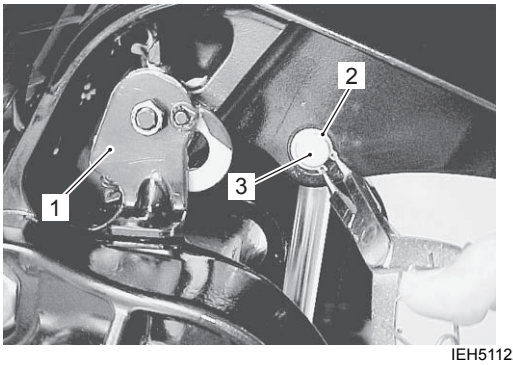

IEH511220011-01

4) Lower the tilt rod to the full down position and disconnect the battery cable.

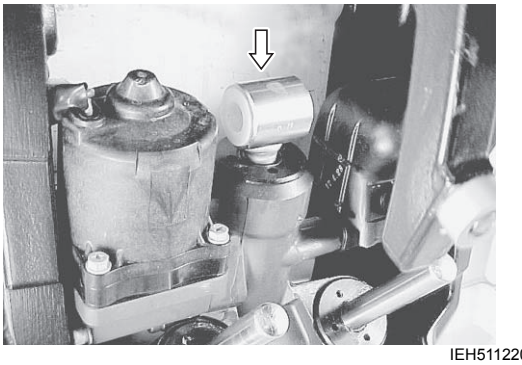

IEH511220012-01

5) Remove the clamp (4) and cut the cable tie (5) binding PTT motor cable and trim sensor lead.

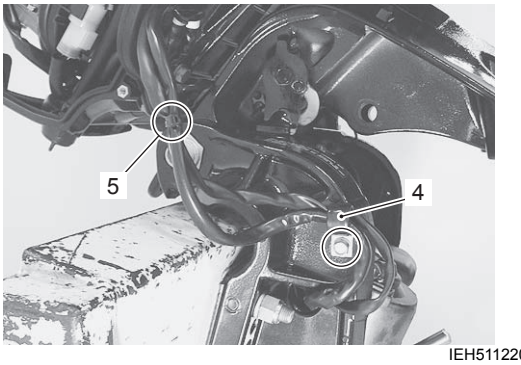

IEH511220013-02

6) Disconnect the PTT motor cable lead wire connector (6).
Remove the PTT motor cable from side cover seal (7).

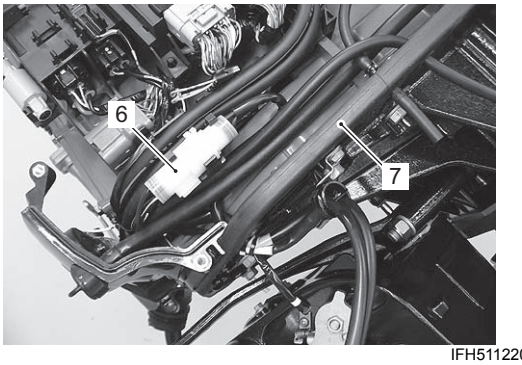

IFH511220002-01

7) Remove two bolts and anode (8). Remove the screw securing bonding wire (9).

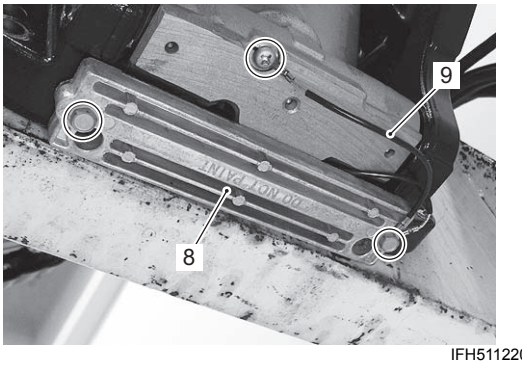

IFH511220003-03

8) Remove two bolts (10) securing PTT cylinder lower shaft to STBD/PORT clamp bracket.

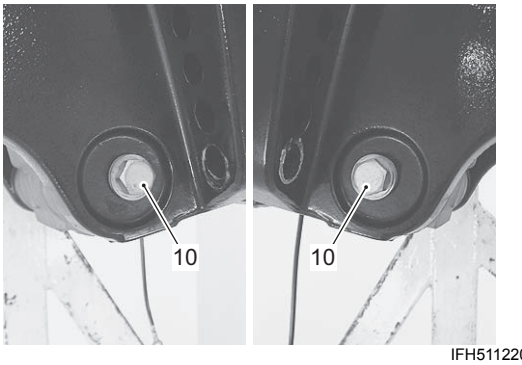

IFH511220007-03

9) Remove two STBD motor mounting bolts (11).
Using flat screw-driver, drive locking edge of lock washer (12) to clamp bracket side.
Loosen the clamp bracket shaft nut (13).

NOTE

Complete removal of the clamp bracket shaft nut is not required.
Nut should be loosened as far as the end of the shaft threads only to facilitate removal of the PTT unit.

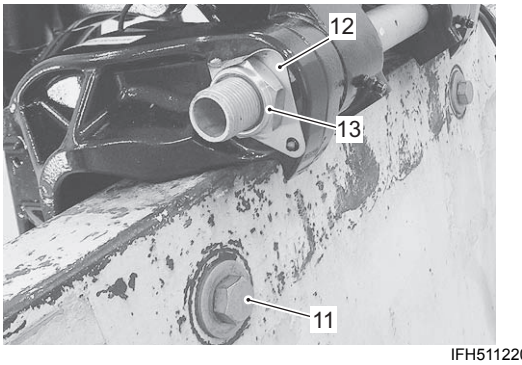

IFH511220008-02

10) Slide the STBD clamp bracket (14) fully outward to the right hand side.
Remove the PTT unit (15) from between the clamp brackets.

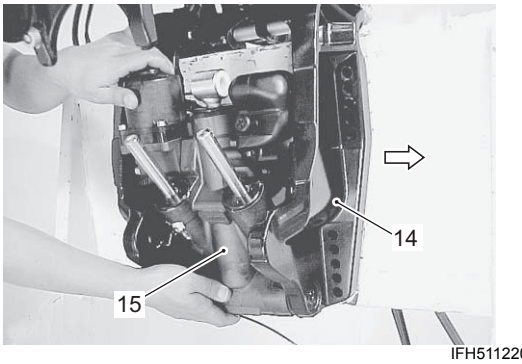

IFH511220009-03

11) Remove the bonding wire (16) from PTT unit.

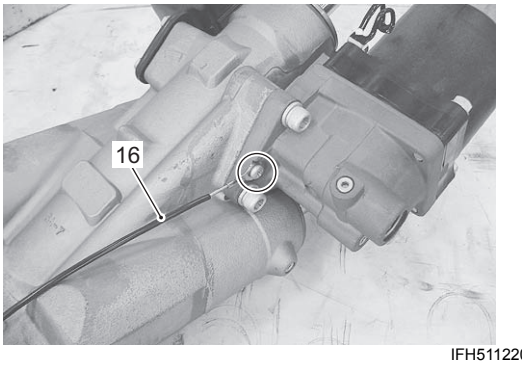

IFH511220010-02

Installation

Installation is reverse order of removal with special attention to the following steps.

- Lower tilt rod to full down position.
- Apply water resistant grease to the tilt cylinder lower shaft (1) and lower shaft bushings (2).
  Install the lower shaft (1) and bushings (2) to PTT unit.

  : Grease 99000–25350 (SUZUKI Water Resistant Grease EP2 (250 g))

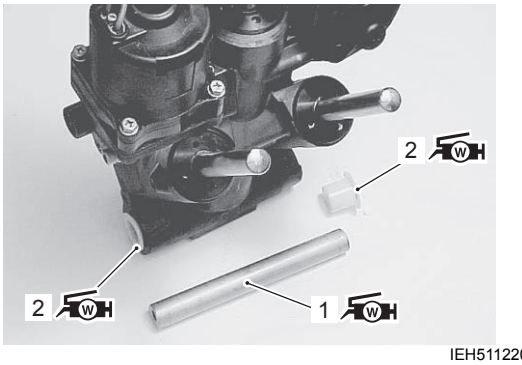

IEH511220019-03

- Place the PTT unit (with lower shaft) in position between clamp brackets.

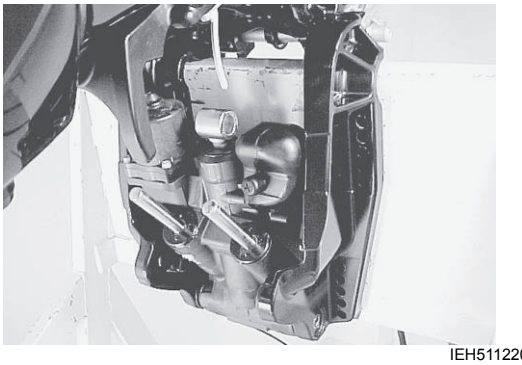

IEH511220020-03

- Tighten the clamp bracket shaft nut (4) to specified torque.

  Tightening torque
  Clamp bracket shaft nut (a): 43 N·m (4.3 kgf-m, 31.0 lbf-ft)

- After tightening clamp bracket shaft nut (4) with specified torque, bend the lock washer (3) edge toward nut to secure nut.

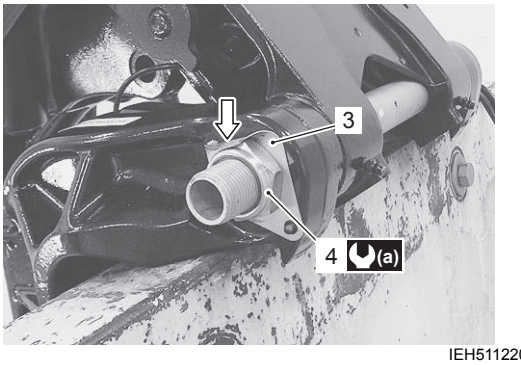

IEH511220021-02

3. Washer	4. Nut

- Tighten two lower shaft bolts (5), pre-coated with thread lock, to specified torque.

  1342 : Thread lock cement 99000–32050 (SUZUKI Thread Lock 1342 (50 g))

  Tightening torque
  PTT cylinder lower shaft bolt (b): 50 N·m (5.0 kgf-m, 36.0 lbf-ft)

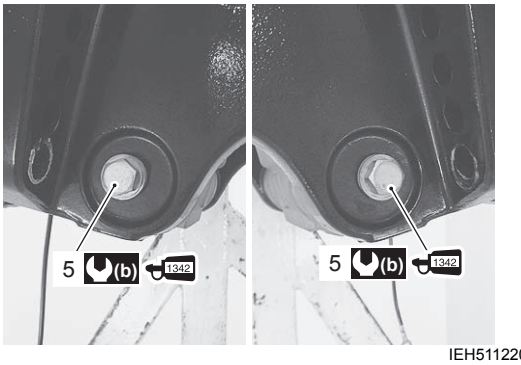

IEH511220022-03

- Install anode (6) and bonding wire (7), then tighten bolts securely.

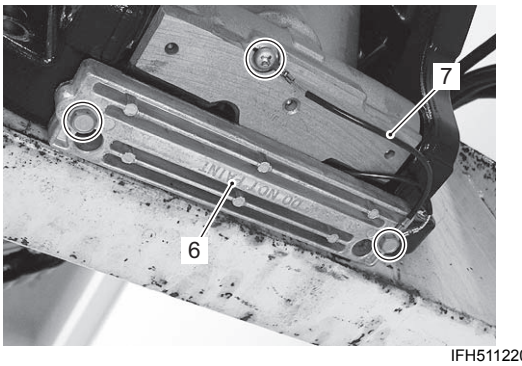

IFH511220004-01

- Apply water resistant grease to tilt rod upper bushings (8), then install bushings in tilt rod.
  Operate the PTT motor to extend the PTT rod upward. Align the tilt rod with the hole in the swivel bracket as the tilt rod extends.

  : Grease 99000–25350 (SUZUKI Water Resistant Grease EP2 (250 g))

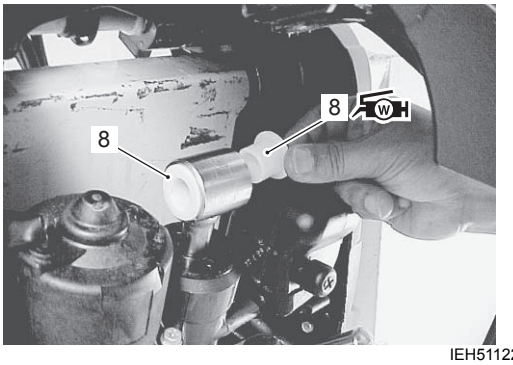

IEH511220024-01

- Apply water resistant grease to the tilt rod upper shaft pin (9), then insert the shaft pin through the swivel bracket and tilt rod.
  Secure the upper shaft with the snap ring (10).

  : Grease 99000–25350 (SUZUKI Water Resistant Grease EP2 (250 g))

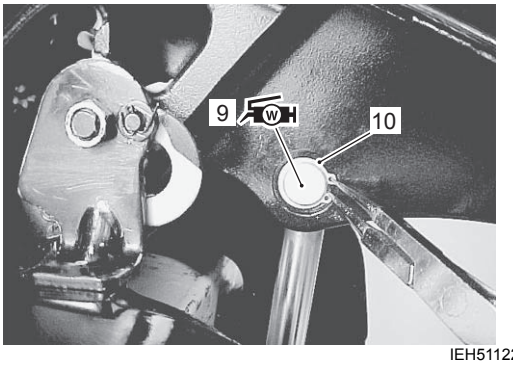

IEH511220025-01

- Route the PTT motor cable properly through the side cover seal and connect the PTT cable connector. Refer to “Wiring Harness Routing Diagram” in Section 4A (Page 4A-2).

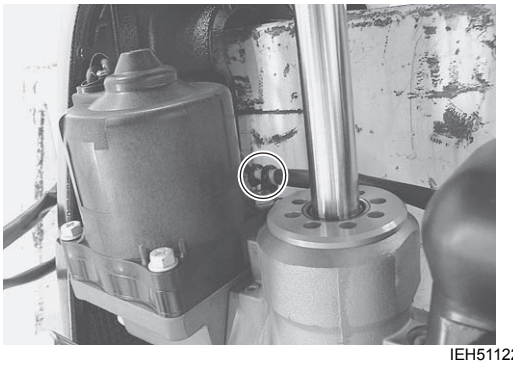

IEH511220026-02

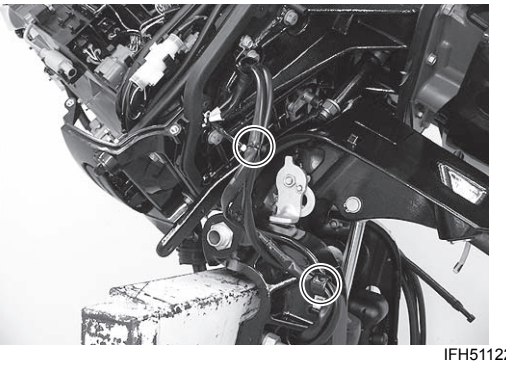

IFH511220005-01

Power Trim and Tilt Unit Components

CENFH5112206005

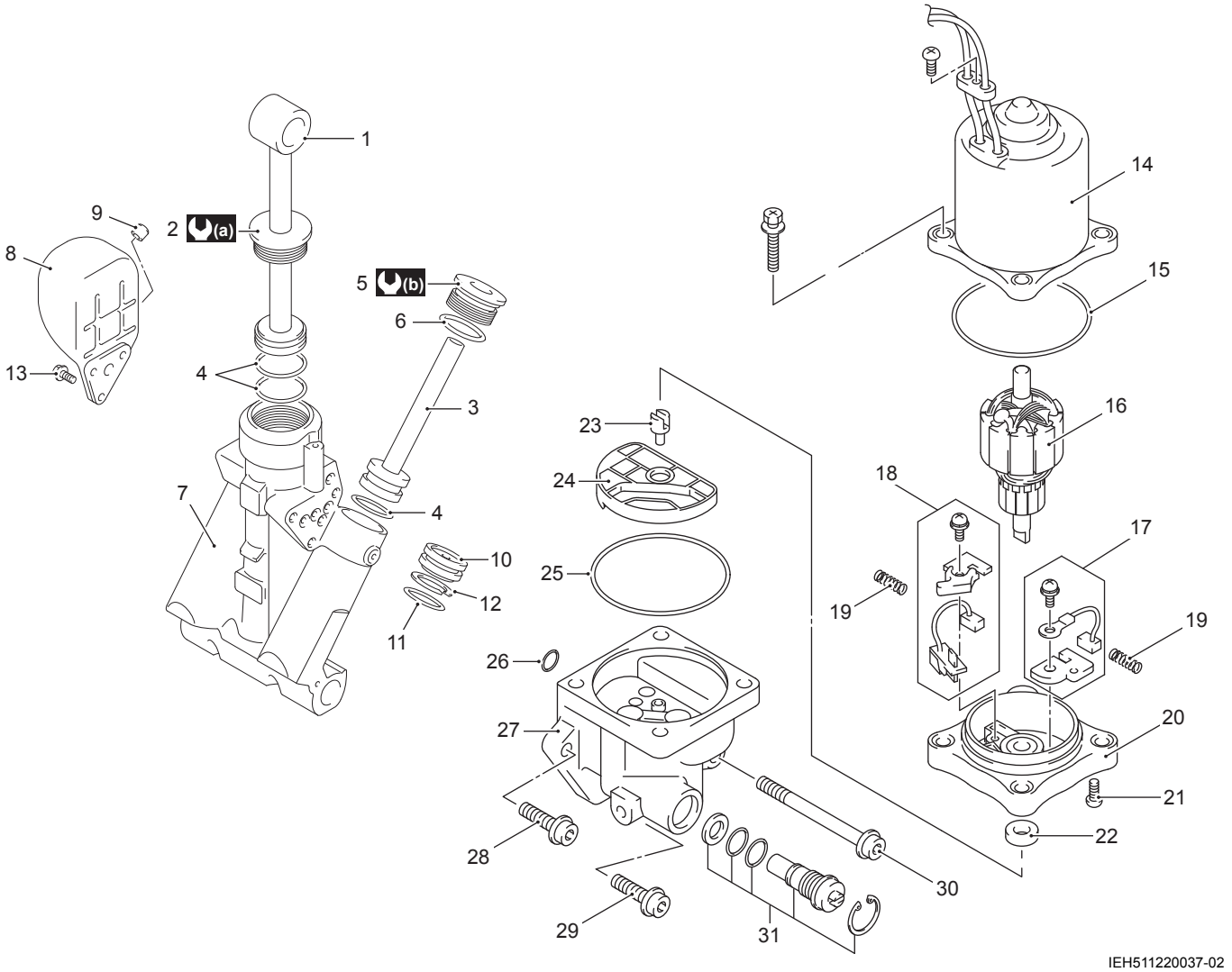

IEH511220037-02

1. Tilt rod	10. Free piston	19. Spring	28. Bolt
2. Tilt cylinder head	11. O-ring	20. Brush holder	29. Bolt
3. Trim ram	12. Ring	21. Screw	30. Bolt
4. O-ring	13. Reservoir bolt	22. Oil seal	31. Manual valve
5. Trim cylinder head	14. Field case	23. Drive joint	(a) : 210 N·m (21.0 kgf-m, 152.0 lbf-ft)
6. O-ring	15. O-ring	24. Filter	(b) : 170 N·m (17.0 kgf-m, 123.0 lbf-ft)
7. PTT manifold	16. Armature	25. O-ring	
8. Reservoir	17. Brush set	26. O-ring	
9. Cap	18. Breaker assembly	27. Pump assembly	

Power Trim and Tilt Unit Disassembly

CENFH5112206006

NOTE

Before disassembly, wash the PTT body with a stiff bristle brush and hot, soapy water to remove sand or dirt. Dry the PTT body with compressed air.

1) Place the lower section of the PTT unit in a vise. Tighten the vise only enough to secure the PTT unit, DO NOT OVER TIGHTEN.

NOTE

To prevent damage to the PTT cylinder use wood blocks, vise jaw protectors, etc., between the vise jaws and PTT components before tightening vise.

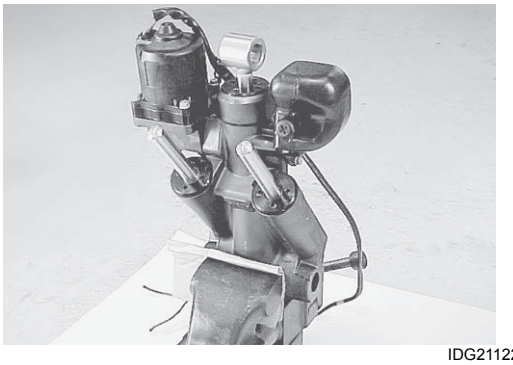

IDG211220057-02

2) Connect the PTT cable extension to PTT motor cable connector.

Special tool
(A): 09945–79310 (PTT cable extension)

3) Connect the PTT cable extension leads (G, Bl) to battery and operate PTT motor until tilt rod is at maximum stroke (full-tilt up position). Unscrew the filler plug and drain PTT oil into a suitable container.

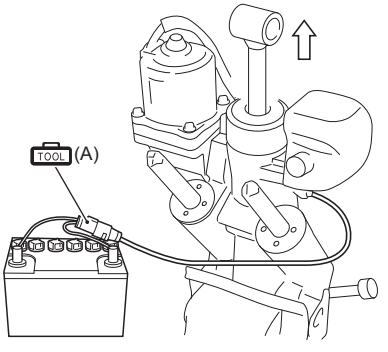

IDG211220058-01

4) Remove the three screws securing reservoir (1), then detach the reservoir (1) from cylinder body. Note the position of O-ring (2) and remove it.

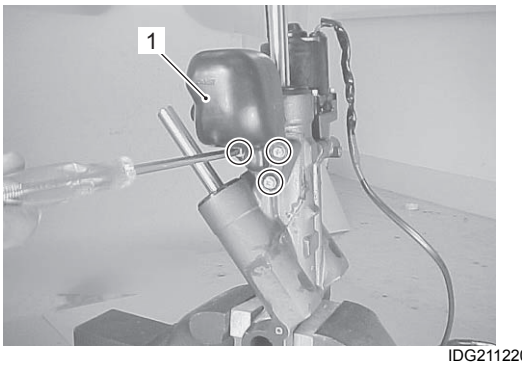

IDG211220059-01

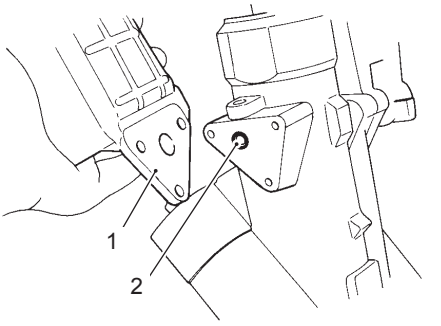

IDG211220062-01

5) Remove the PTT motor assembly (3).
Refer to “Power Trim and Tilt Motor Removal and Installation” (Page 2B-25).
Note the position of drive joint (4) and O-ring (5), before removing them.

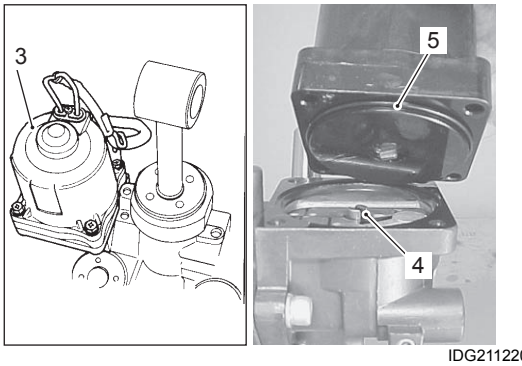

IDG211220060-01

6) Remove the manual release valve snap ring (6), then unscrew the manual release valve (7).

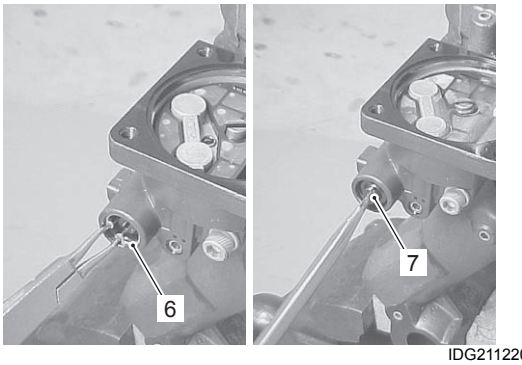

IDG211220061-01

7) Remove the three bolts securing the PTT pump assembly (8), then detach the PTT pump assembly from PTT cylinder body.
Note the position of O-rings (9), orifice collar (with ball valve) (10), orifice collar (with filter and ball valve) (12) and orifice collar (11), before removing them.

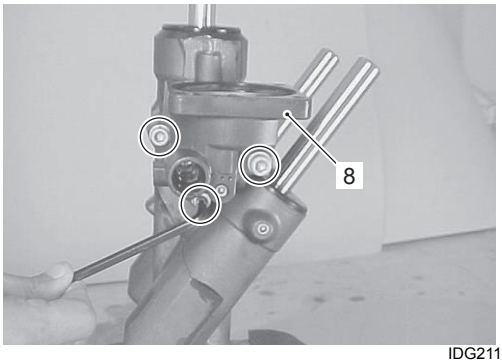

IDG211220063-01

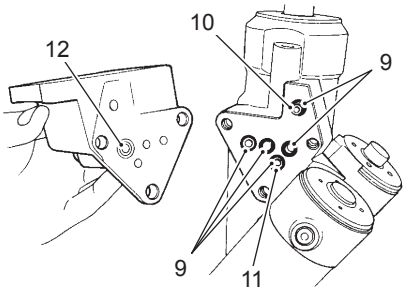

IDG211220064-04

8) Using special tool, unscrew the PTT cylinder head (13).

Special tool
TOOL (B): 09944–09820 (PTT cylinder cap tool)

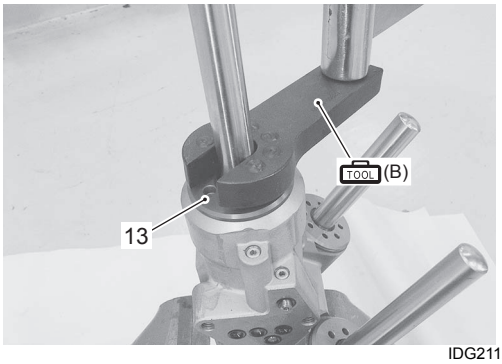

IDG211220065-02

9) Pull the tilt rod/piston assembly (14) out of the tilt cylinder.
Remove the free piston (15) from the tilt cylinder.

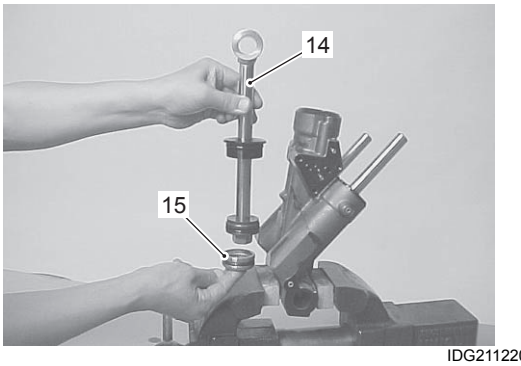

IDG211220066-01

10) Unscrew the piston retaining nut from the bottom of the tilt rod and remove the washer.
Carefully retain and account for four shock valves, each composed of spring, rod and ball.

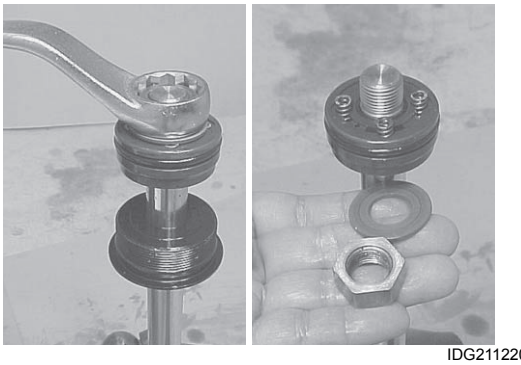

IDG211220067-01

11) Remove the piston assembly and PTT cylinder head from the tilt rod by sliding them down and off the rod end.

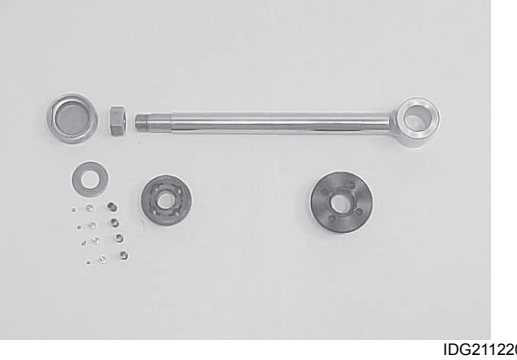

IDG211220068-01

12) Using special tool, unscrew the trim cylinder head.

Special tool
TOOL (C): 09944–09810 (PTT trim cap tool)

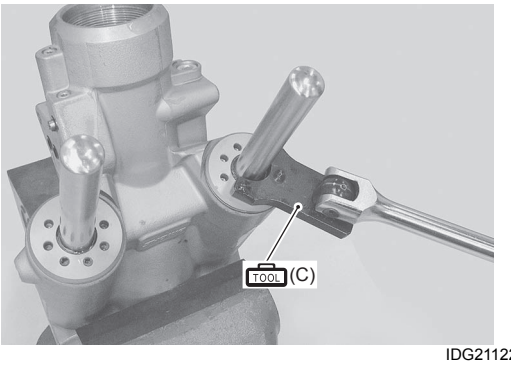

IDG211220069-02

13) Pull the trim rod/piston assembly out of the trim cylinder.

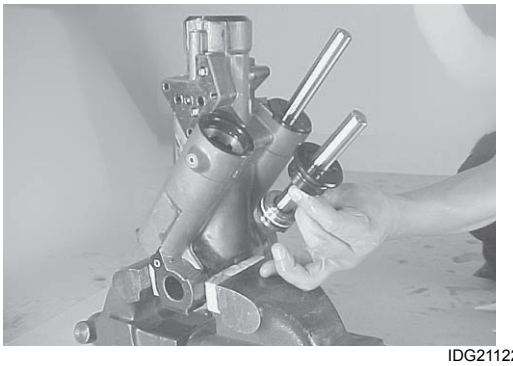

IDG211220070-01

Power Trim and Tilt Unit Reassembly

CENFH5112206007

Assembly is reverse order of disassembly with special attention to following steps.

NOTE

- **Do not reuse O-rings and seals once removed.**
  Always use new parts.
- **Lubricate all components and O-rings with PTT fluid before assembly.**
- **Do not reuse PTT fluid, always refill with new fluid.**

Tilt Rod

- When tightening the piston retaining nut on the tilt rod piston, apply Thread lock 1342 to the threads. Tighten the nut to specified torque.

1342 : Thread lock cement 99000–32050 (SUZUKI Thread Lock 1342 (50 g))

Tightening torque
Piston retaining nut (a): 100 N·m (10.0 kgf-m, 72.5 lbf-ft)

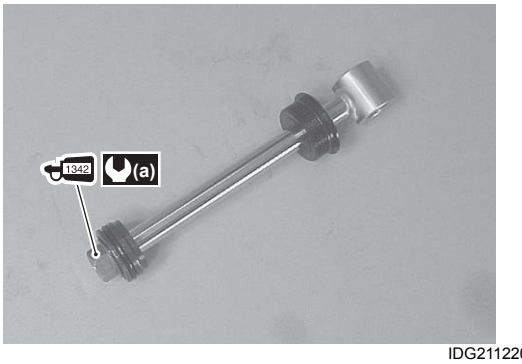

IDG211220071-01

Installing Tilt Rod / Piston

- Pour 100 ml (3.4 oz) of PTT fluid into cylinder.
- Insert the free piston into cylinder and push it down to the bottom of the cylinder.
- Pour PTT fluid into the cylinder until it is topped off.
- Insert the tilt rod/piston into cylinder and thread the tilt cylinder head by hand until fully seated.
- Tighten the cylinder head to specified torque using special tool.

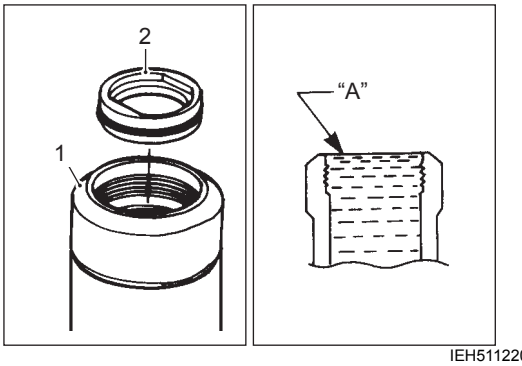

IEH511220038-01

1. Cylinder	2. Free piston	"A": Top OFF

Tightening torque
Tilt cylinder head (a): 210 N·m (21.0 kgf-m, 152.0 lbf-ft)

Special tool
(A): 09944–09820 (PTT cylinder cap tool)

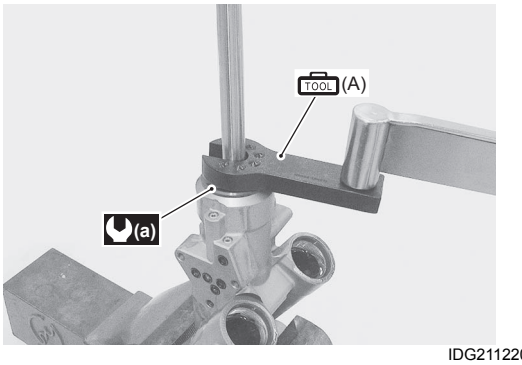

IDG211220073-02

Trim Rod

- Pour PTT fluid into the trim cylinder until it is topped off.
- Insert the trim rod/piston assembly into cylinder and thread the trim cylinder head by hand until fully seated.
- Tighten the trim cylinder head to specified torque using special tool.

Tightening torque
Trim cylinder head (a): 170 N·m (17.0 kgf-m, 123.0 lbf-ft)

Special tool
(B): 09944–09810 (PTT trim cap tool)

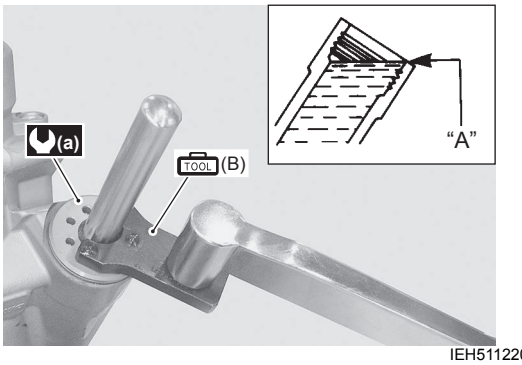

IEH511220039-01

"A": Upper edge

PTT Pump Assembly

- Install five O-rings and orifice collars to PTT cylinder body.

NOTE

Lubricate O-rings with PTT fluid before installing.

- Install PTT pump assembly, then tighten three screws to specified torque.

Tightening torque
PTT pump case screw (a): 8.5 N·m (0.85 kgf-m, 6.0 lbf-ft)

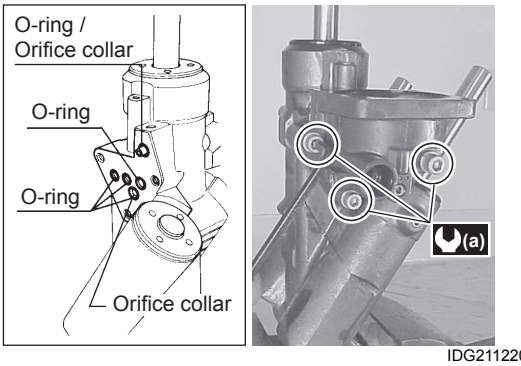

IDG211220075-03

Manual Release Valve

- Oil and install the manual release valve (1). Tighten the valve to specified torque.
- Install snap ring (2).

Tightening torque
Manual release valve (a): 3.5 N·m (0.35 kgf-m, 2.5 lbf-ft)

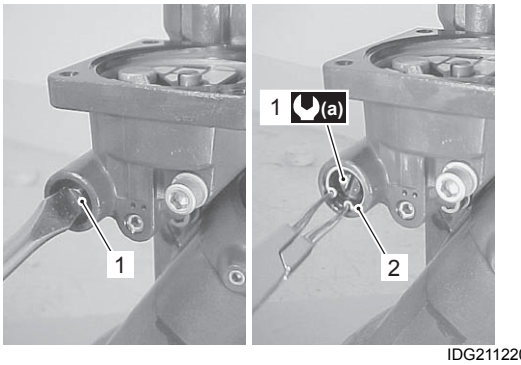

IDG211220076-01

PTT Motor

- Install the PTT motor.
  Refer to “Power Trim and Tilt Motor Removal and Installation” (Page 2B-25).

Reservoir

- Install O-ring (1) and reservoir, then tighten bolts to specified torque.

  Tightening torque
  Reservoir bolt (a): 5 N·m (0.5 kgf-m, 3.5 lbf-ft)

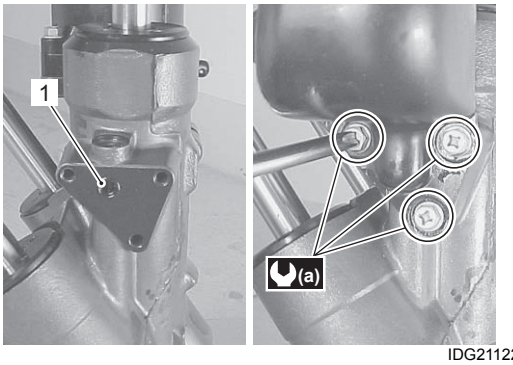

IDG211220077-01

PTT Fluid

- Pour recommended PTT fluid into reservoir to specified level.
  Refer to “Checking PTT Fluid Level” (Page 2B-12).

Air Bleeding

Before installing the PTT unit on the outboard motor, use the following procedure to bleed air from the system.

1) Support the PTT unit in an upright position in a vise.
2) Fill the reservoir with PTT fluid to the specified level, then install oil filler plug.

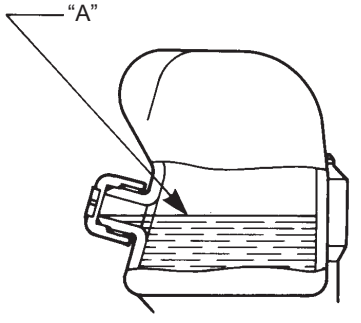

IEH511220040-01

“A”: Oil level (When full-tilted)

3) Tighten the manual release valve to the specified torque.

   Tightening torque
   Manual release valve: 3.5 N·m (0.35 kgf-m, 2.5 lbf-ft)

4) Connect the PTT cable extension to the PTT motor cable connector.

   Special tool
   TOOL (A): 09945–79310 (PTT cable extension)

5) Connect the two extension cable lead wires (G to positive/Bl to negative) to the battery as shown in the illustration.
   Operate the PTT motor until the PTT rod is in the fully trimmed down position (completely retracted). If the rod does not come down completely, push it in by hand while operating the motor.

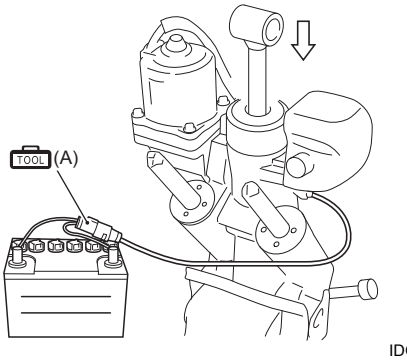

IDG211220079-01

6) Reverse the two extension cable lead wires (Bl to positive/G to negative). Operate the PTT motor until the PTT rod is in the full tilt up position (fully extended). If the rod does not come up completely, pull it up by hand while operating the motor.

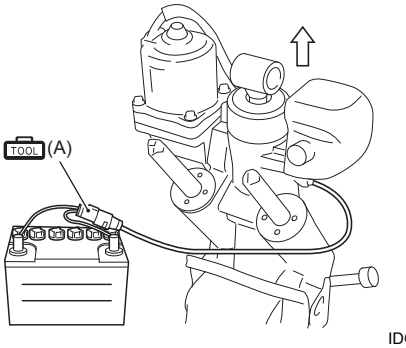

IDG211220080-01

7) Remove the reservoir oil filler plug and fill with PTT fluid to the specified level.
8) Repeat procedures 5 – 7 until the fluid level in the PTT unit stabilizes at the specified level.

NOTE

Repeat the air bleeding procedure after the PTT unit has been installed on the outboard motor.
Refer to “Air Bleeding from PTT Unit” (Page 2B-12).

Power Trim and Tilt Unit Components Cleaning and Inspecting

CENFH5112206008

Thoroughly wash all metal components with cleaning solvent and dry them with compressed air.
Arrange all components on a clean sheet of paper.

NOTE

- **Do not lay PTT components out on a rag, as dirt or lint may be transferred to these items which may cause possible system operating problems.**
- **If excessive wear, cracks, defective or other damage is found on any component, replace component.**

- Inspect tilt rod and trim rod, replace if damaged or bent is found.
- Inspect the surface of tilt rod and trim rod for scores, grooves or roughness.
  Slight roughness may be removed with fine emery paper.
  A badly scored or grooved rod must be replaced.

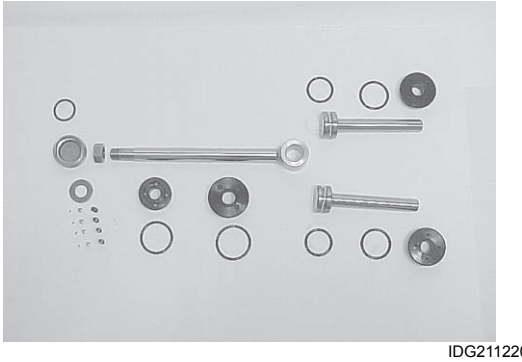

IDG211220082-01



IDG211220096-01

- Inspect the PTT cap seal and O-ring.
  Replace if cuts, nicks, or excessive wear is found.

NOTE

It is recommended that the O-ring always be replaced once the tilt/trim cylinder has been disassembled.

- Inspect the shock valves (spring, rod and ball).
  Replace if there are any signs of rust or pitting.

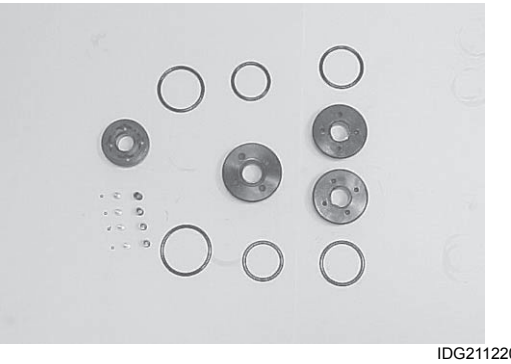

IDG211220083-01

- Inspect the cylinder bore for evidence of a rough or grooved surface.
  Light honing may rectify slight surface roughness or scarring, but a deeply scarred surface will require replacement of the tilt cylinder.

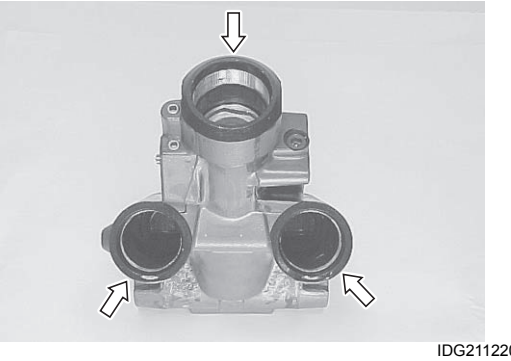

IDG211220084-01

- Inspect manual release valve for damage.
  Inspect manual release valve O-ring.
  Replace if nicked or cut is found.



IDG211220085-02

- Inspect lower rod.
  If bending, cracks, corrosion or other damage is found, replace lower rod.
- Inspect upper shaft for bent, twist or other damage. Replace if necessary.

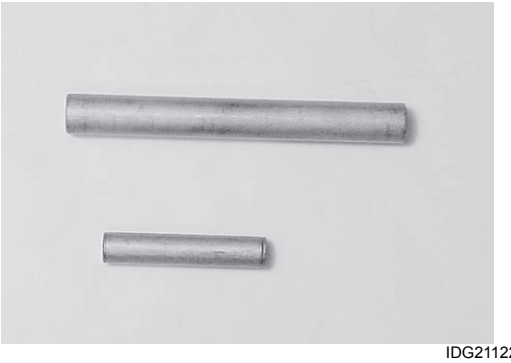

IDG211220097-01

- Inspect all bushings for excessive wear or other damage. Replace if necessary.
  If bushing fit is loose when installing, replace bushing.

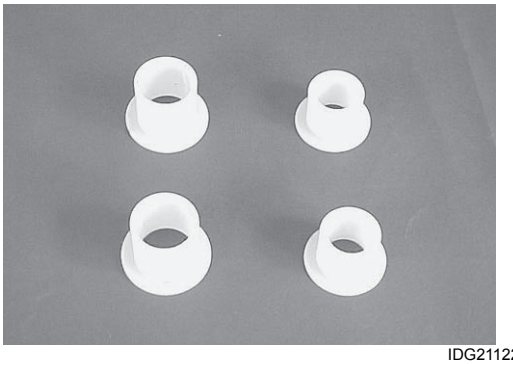

IDG211220086-01

Power Trim and Tilt Motor Removal and Installation

CENFH5112206009

Removal

1) Remove Power Trim and Tilt unit.
   Refer to “Power Trim and Tilt Unit Removal and Installation” (Page 2B-14).

NOTE

Before removing PTT motor, wash the PTT body with a stiff bristle brush and hot, soapy water to remove sand or dirt. Dry the PTT body with compressed air.

2) Place the lower section of the PTT unit in a vise. Tighten the vise only enough to secure the PTT unit, DO NOT OVER TIGHTEN.

NOTE

To prevent damage to the PTT cylinder use wood blocks, vise jaw protectors, etc., between the vise jaws and PTT components before tightening vise.

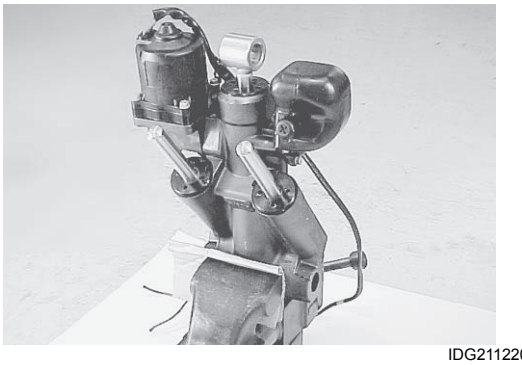

IDG211220087-02

3) Remove the four screws securing the PTT motor (1) to the PTT pump assembly.

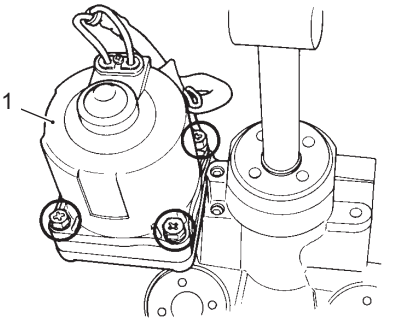

IDG211220088-01

4) Detach the PTT motor from PTT pump assembly. Note the position of drive joint (2) and O-ring (3) and remove them.

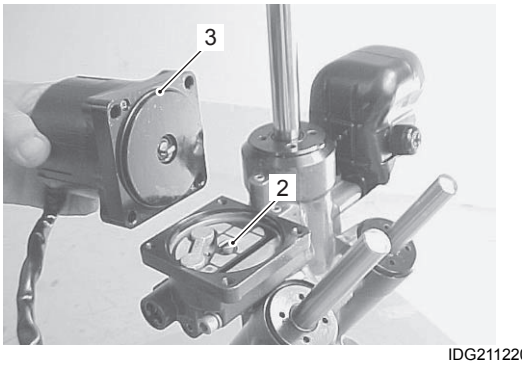

IDG211220089-01

Installation

Installation is reverse of removal with special attention to following steps.

- Ensure that the drive joint (1) is aligned and firmly inserted into the gear pump assembly.
- Fit O-ring (2) to PTT motor.



IDG211220090-01

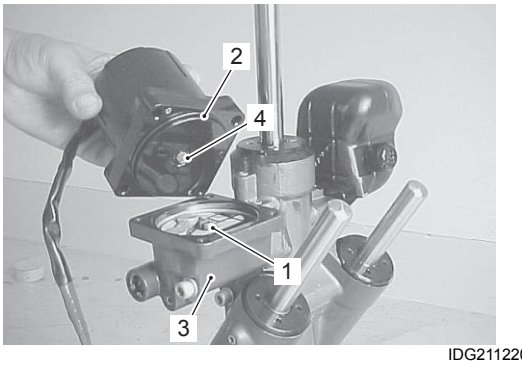

IDG211220091-01

- Check the level of PTT fluid contained in the PTT pump assembly. If level is low, add recommended PTT fluid until level with mating surface of PTT motor.
- Ensure that the faces of the PTT motor and pump unit are free of dirt or debris.
  When attaching the PTT motor to the PTT pump assembly (3), ensure that the tip of armature shaft (4) fits firmly into the drive joint (1).
- Tighten the four screws (a) to specified torque.

  Tightening torque
  PTT motor screws (a): 5 N·m (0.5 kgf-m, 3.6 lbf-ft)

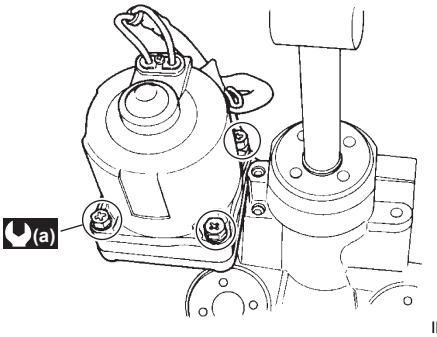

IDG211220092-02

- Pour recommended PTT fluid into reservoir until specified level.
- Perform the air bleeding procedure.
  Refer to “Power Trim and Tilt Unit Reassembly” (Page 2B-21).

Power Trim and Tilt Motor Disassembly and Assembly

CENFH5112206010

Disassembly

1) For correct assembly, scribe an alignment mark on the field case and brush holder.
2) Slide cable protector tube upward.
3) Remove the screw securing the motor cable holder (1), then slide motor cable holder and grommets (2) out as shown in figure.

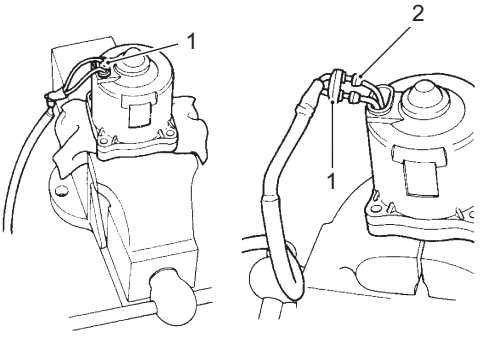

I9J011220034-01

4) Remove the two screws (3) securing the field case to the brush holder.

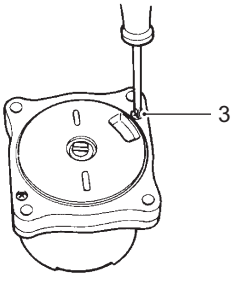

I9J011220035-01

5) Slide the field case upward and away from the brush holder.

NOTE

When separating field case from brush holder, push the PTT motor cables into brush holder as the field case is removed.

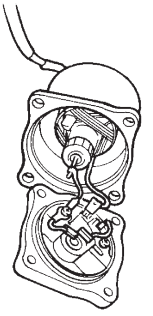

I9J011220036-01

6) Disconnect PTT motor cables from brush holder. Remove armature from field case. Note the position of the O-ring encircling the brush holder.

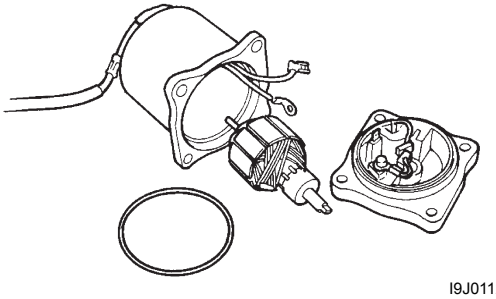

I9J011220037-01

Assembly

Assembly is reverse of disassembly with special attention to following steps.

- Install O-ring (1).
- Install armature (2) to brush holder first. When installing the armature, use care to avoid breaking the brushes.

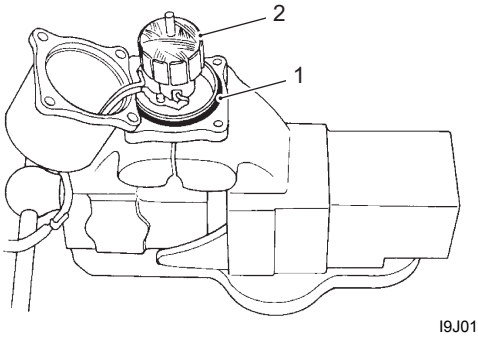

I9J011220038-01

- Match up previously scribed alignment marks.
- When assembling field case to brush holder, pull out on the PTT motor cables as the field case is assembled into position.
- Apply silicone seal to PTT motor cable holder and grommets and install cable holder screw.

Si : Sealant 93691–80030 (SUZUKI Silicone Seal (100 g))

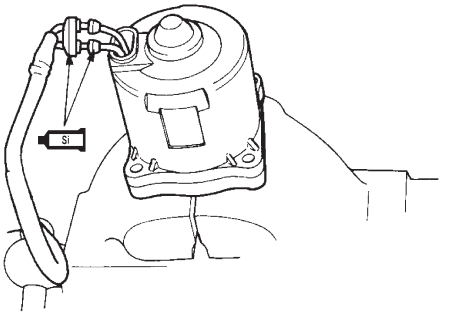

I9J011220039-01

PTT Motor Related Items Inspection

CENFH5112206011

Armature and Commutator

- Check for continuity between the commutator and the armature core/shaft. Replace armature if continuity is indicated.

Special tool
TOOL (A): 09900–25008 (Multi circuit tester set)

Tester knob indication
Continuity (•)))

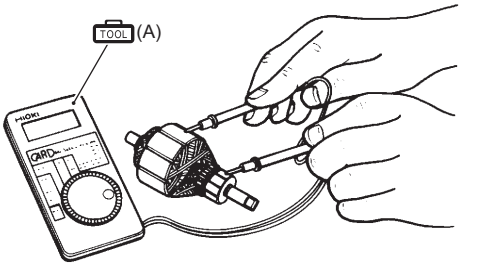

I9J011220040-01

- Check continuity between adjacent commutator segments.
  Replace armature if no continuity is indicated.

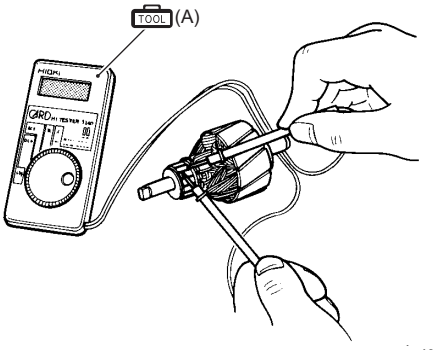

I9J011220041-01

- Inspect the commutator surface.
  If surface is gummy or dirty, clean with 400 grit emery paper (1).
- Measure commutator outside diameter.
  If measurement exceeds service limit, replace armature.

Special tool
TOOL (B): 09900–20101 (Vernier calipers (150 mm))

Commutator outside diameter
Standard: 22.0 mm (0.87 in)
Service limit: 21.0 mm (0.83 in)

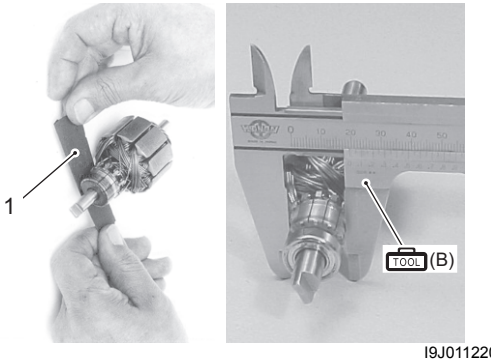

I9J011220042-01

- Ensure that the mica (insulator) between commutator segments are undercut “a” to specified depth.
  If undercut is less than service limit, cut to specified depth.

⚠ WARNING

Failure to following proper precautions during use of the compressed air may cause severe personal injury.

Wear safety glasses when using compressed air.

NOTE

Remove all particles of mica and metal using compressed air.

Commutator undercut
Standard: 1.6 – 1.9 mm (0.06 – 0.07 in.)
Service limit: 1.0 mm (0.04 in.)

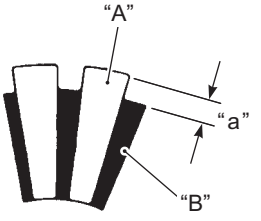

I9J011220043-01

“A”: Segment	“B”: Mica

Brushes

- Check the length of each brush.
  If brushes are worn down to the service limit, they must be replaced.

Special tool
TOOL (B): 09900–20101 (Vernier calipers (150 mm))

Brush length
Standard: 9.8 mm (0.39 in.)
Service limit: 5.5 mm (0.22 in.)

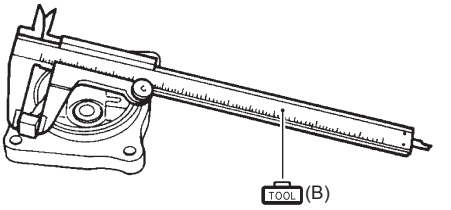

IDG211220099-01

O-ring

- Inspect the O-ring between the PTT motor and PTT pump assembly. Replace if cuts, nicks or tears are found.

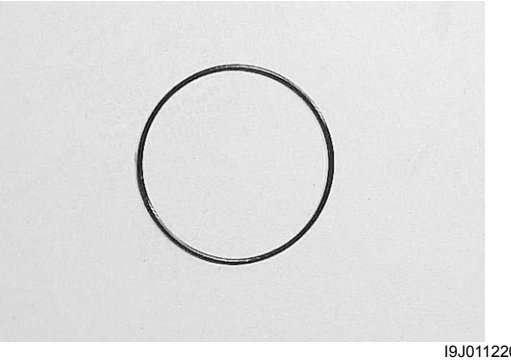

I9J011220045-01

PTT Motor Relay Inspection

CENFH5112206012

1) Remove the PTT motor relay from the electric parts holder.
   Refer to “Electric Parts Holder Removal and Installation” in Section 1D (Page 1D-3).
2) Check the resistance between each two terminals.

Special tool
(A): 09900–25008 (Multi circuit tester set)

Tester knob indication
Resistance (Ω)

PTT relay coil resistance
Between “terminal (1)” and “terminal (4)”: 16 – 24 Ω
Between “terminal (2)” and “terminal (4)”: 16 – 24 Ω

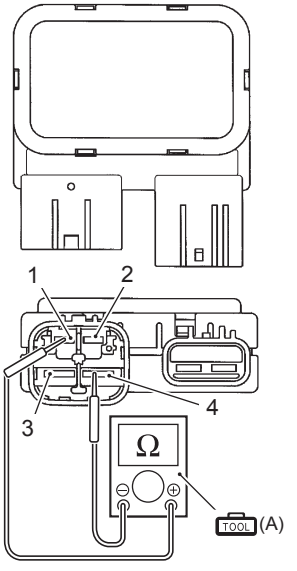

IDG211220027-03

NOTICE

If the 12 V power supply wire is connected to wrong terminal or touched to each other, the power supply wire, tester may be damaged.

Be careful not to touch 12 V power supply wires to each other or with other terminals.

3) Check continuity between terminal (3) and (5) each time 12 V power supply is applied to terminal (1) and (4).
   Connect the positive (+) lead to terminal (1), and negative (–) lead to terminal (4).
4) Check continuity between terminal (3) and (6) each time 12 V power supply is applied to terminal (2) and (4).
   Connect the positive (+) lead to terminal (2), and negative (–) lead to terminal (4).

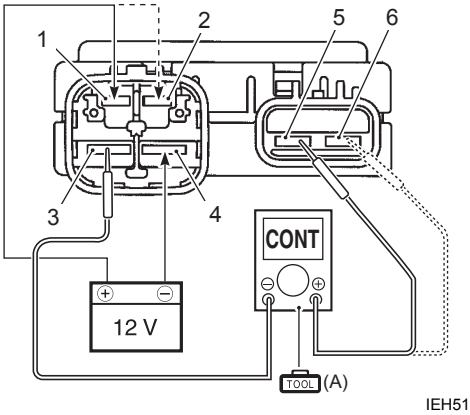

IEH511220042-01

1. Terminal 1 (UP coil)	4. Terminal 4 (GND)
2. Terminal 2 (DN coil)	5. Terminal 5 (For UP)
3. Terminal 3 (Power)	6. Terminal 6 (For DN)

Special tool
(A): 09900–25008 (Multi circuit tester set)

Tester knob indication
Continuity (•))))

PTT relay function

	Continuity
12 V power applied	Yes
12 V power not applied	No

5) If inspection in step 2 and/or step 3, 4 fails, replace PTT motor relay.
6) Install the PTT motor relay to the electric parts holder.
   Refer to “Electric Parts Holder Removal and Installation” in Section 1D (Page 1D-3).

PTT Switch Inspection

CENFH5112206013

Test continuity between the switch lead wires at each of the three switch positions.
If out of specification, replace PTT switch.

Special tool
TOOL : 09900–25008 (Multi circuit tester set)

Tester knob indication
Continuity (•))))

	Tester probe connection		Tester indicates
	Red (+)	Black (–)	
DN side depressed	Terminal (2)	Terminal (1)	Continuity
UP side depressed	Terminal (3)	Terminal (1)	Continuity
Not depressed	Terminal (2)	Terminal (1)	Infinity
	Terminal (3)		

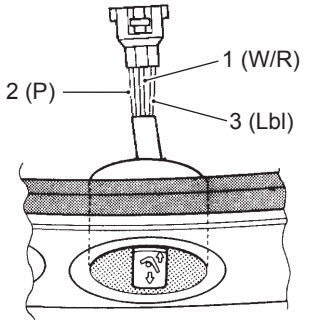

IEH511220027-01

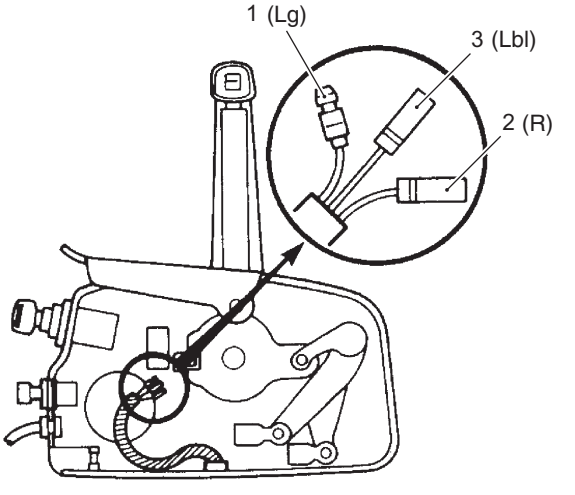

I9J011220049-03

Tilt Limit Switch Inspection

CENFH5112206014

1) Disconnect the tilt limit switch lead wire connector (1).
   Refer to “Electric Parts Holder Removal and Installation” in Section 1D (Page 1D-3).

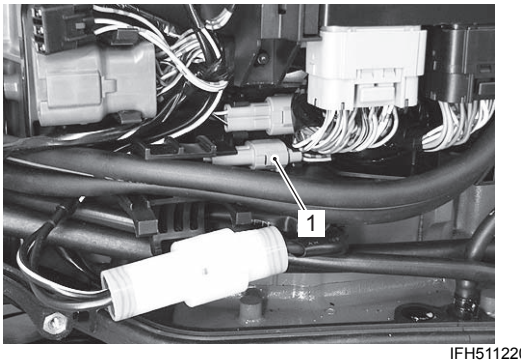

IFH511220006-01

2) Test continuity between wires.
   If out of specification, replace switch.
   Refer to “Clamp / Swivel / Steering Brackets Disassembly” in Section 2A (Page 2A-19) and “Clamp / Swivel / Steering Brackets Assembly” in Section 2A (Page 2A-21).

   Special tool
   TOOL : 09900–25008 (Multi circuit tester set)

   Tester knob indication
   Continuity (•))))

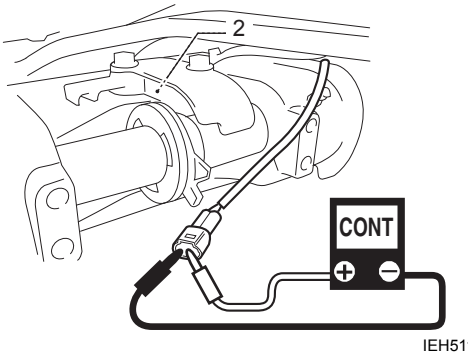

IEH511220029-03

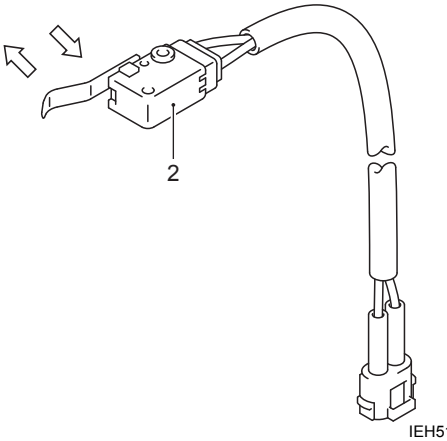

IEH511220041-02

2. Tilt limit switch

Push the switch actuator plate. (Full tilt up position)	No continuity
Release the switch actuator plate. (Except for full tilt up position)	Continuity

Section 3

Lower Unit

CONTENTS

Precautions 3-1
Precautions..... 3-1
General Precautions 3-1
Precaution for Lower Unit 3-1

Right Hand Rotation Unit..... 3A-1
Diagnostic Information and Procedures.....3A-1
Diagnose Lower Unit Malfunction 3A-1
Service Instructions.....3A-2
Lower Unit Components 3A-2
Propeller Removal and Installation 3A-5
Propeller / Propeller Nut / Cotter Pin Inspection.....3A-5
Lower Unit Removal and Installation.....3A-6
Water Pump Removal and Installation.....3A-7
Water Pump and Related Item Inspection 3A-9
Lower Unit Disassembly.....3A-9
Lower Unit Related Item Inspection 3A-12
Propeller Shaft Oil Seal Replacement.....3A-15
Driveshaft Oil Seal Replacement 3A-16
Lower Unit Assembly 3A-16
Trim Tab Adjustment.....3A-23
Lower Unit Gears - Shimming and Adjustment ..3A-24

Left Hand Rotation Unit 3B-1
Diagnostic Information and Procedures.....3B-1
Diagnose Lower Unit Malfunction 3B-1
Service Instructions.....3B-2
Lower Unit Components.....3B-2
Propeller Removal and Installation 3B-5
Propeller / Propeller Nut / Cotter Pin Inspection.....3B-5
Lower Unit Removal and Installation.....3B-6
Water Pump Removal and Installation.....3B-7
Water Pump and Related Item Inspection 3B-9
Lower Unit Disassembly.....3B-9
Lower Unit Related Item Inspection 3B-13
Propeller Shaft Oil Seal Replacement.....3B-15
Driveshaft Oil Seal Replacement 3B-16
Lower Unit Assembly 3B-17
Trim Tab Adjustment.....3B-23
Lower Unit Gears - Shimming and Adjustment ..3B-24

Precautions

Precautions

General Precautions

CENFH5113000001

Refer to “General Precautions” in Section 00 (Page 00-1).

Precaution for Lower Unit

CENFH5113000002

⚠ WARNING

Failure to take proper precautions when installing or removing the propeller can result in severe personal injury.

When installing or removing the propeller:

- **Shift into neutral and remove the emergency stop switch lock plate so that the motor cannot be started accidentally.**
- **Wear gloves to protect hands, and lock the propeller by placing a block of wood between the propeller blade tips and the anti-cavitation plate before attempting to remove or install propeller nut.**

⚠ WARNING

Failure to take proper precautions when removing or installing the lower unit can result in severe personal injury.

When installing or removing the lower unit:

- **Always disconnect the battery cable, before removing lower unit.**
- **Remove the emergency stop switch lock plate from the emergency stop switch.**

NOTE

- **When draining lower unit gear oil, check the following points.**
  - **– Water ingress (white, milky appearance)**
  - **– Overheating or burning (black appearance, charred smell)**
  - **– Metal filings or deposits**
- **If reassembling with original components and gears, do not omit or add any shims or thrust washers.**
- **To simplify reassembly and to prevent confusion, note the positions and quantities of all shims and thrust washers. Retain these items next to the gears or bearings to which they belong.**

Right Hand Rotation Unit

Diagnostic Information and Procedures

Diagnose Lower Unit Malfunction

CENFH5113104001

Trouble Check Chart

Condition	Possible cause	Correction / Reference Item
Engine stalls when engaging gear	Idling speed set too low.	*Adjustment.*
	Propeller shaft bearings damaged, lacking lubrication or seized.	*Replace.*
Engaging gear(s) has no effect on propulsion	Clutch out of adjustment.	*Adjustment.*
	Driveshaft broken or splines damaged.	*Replace.*
	Chipped or worn dog clutches.	*Replace.*
	Propeller not secured correctly (fallen off).	*Inspection or retighten.*
Loss of power. (Assuming engine is OK)	Propeller bush slipping.	*Replace.*
	Bent or worn propeller.	*Repair or replace.*
Engine shakes the boat	Failed propeller bush.	*Replace.*
	Bent driveshaft or propeller shaft.	*Replace.*
	Damaged propeller.	*Replace.*
Clutch will not engage or disengage	Seized shift rod.	*Inspection.*
	Clutch shaft and clutch rod have become detached.	*Inspection.*
	Seized/broken remote control cable.	*Replace.*
	Problem at control box end.	*Inspection or replace.*

Service Instructions

Lower Unit Components

CENFH5113106001

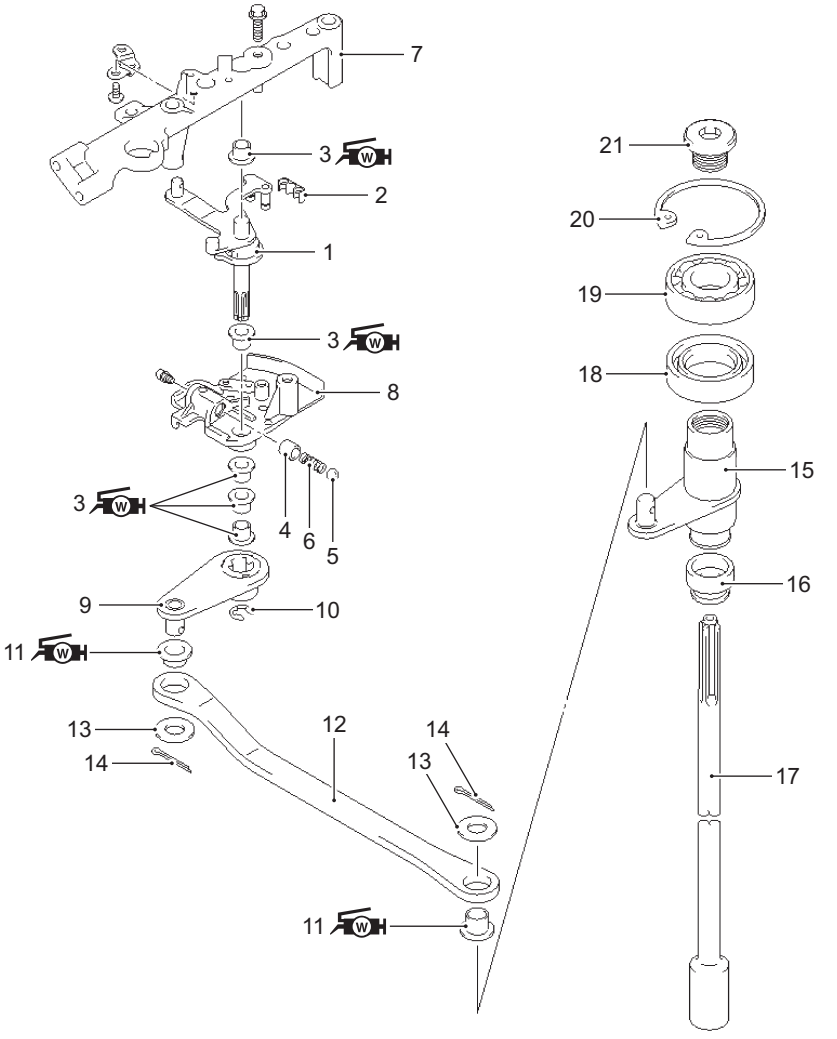

IFH511310002-02

1. Clutch lever	7. Throttle lever holder	13. Washer	19. Bearing
2. Clutch lever bushing	8. Clutch lever holder	14. Pin	20. Circlip
3. Bushing	9. Clutch shaft arm	15. Clutch shaft	21. Plug
4. Spring pin	10. E-ring	16. Clutch rod cover	: Apply SUZUKI Water Resistant Grease.
5. Ball	11. Bushing	17. Clutch rod	
6. Spring	12. Clutch lever link	18. Oil seal	

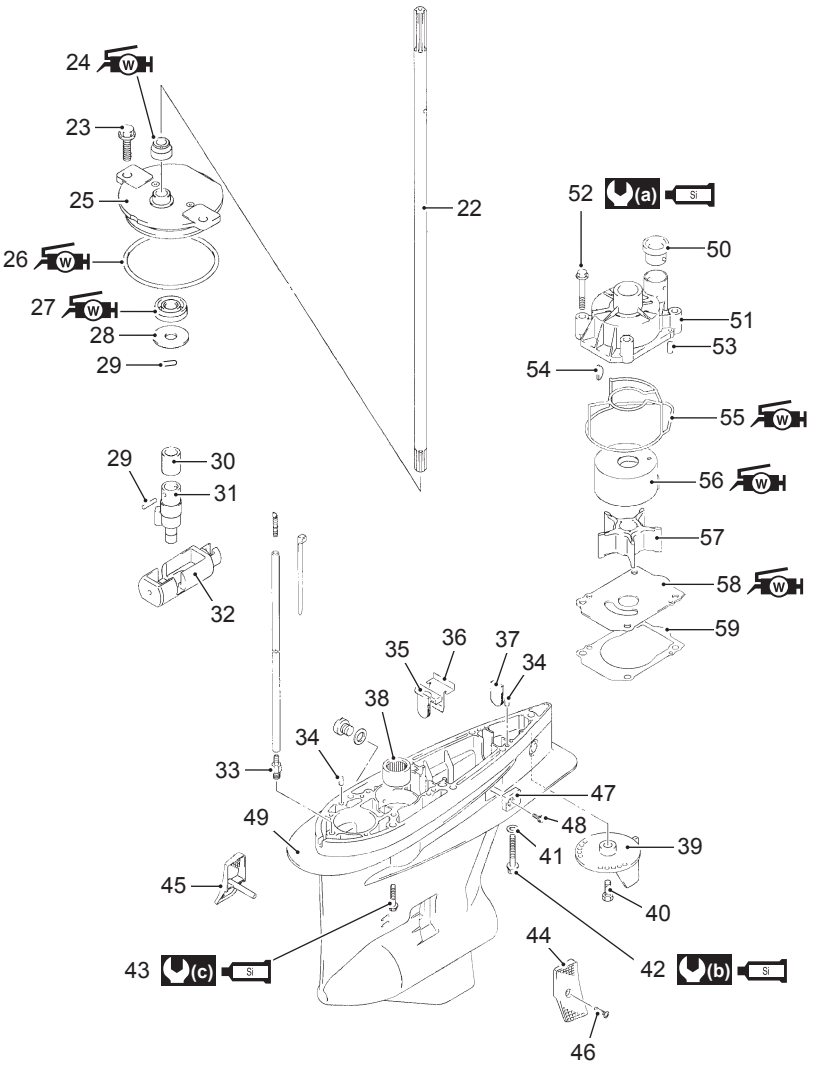

IEH511310110-03

22. Shift rod	33. Nipple	44. Water filter PORT	55. Sealing
23. Bolt	34. Dowel pin	45. Water filter STBD	56. Inner sleeve
24. Clutch rod cover	35. Exhaust seal rubber	46. Screw	57. Water pump impeller
25. Shift rod housing	36. Exhaust seal plate	47. Anode	58. Under panel
26. O-ring	37. Grommet	48. Bolt	59. Gasket
27. Oil seal	38. Pinion bearing	49. Gearcase	(a) : 17 N·m (1.7 kgf-m, 12.5 lbf-ft)
28. Washer	39. Trim tab	50. Bushing	(b) : 83 N·m (8.3 kgf-m, 60.0 lbf-ft)
29. Pin	40. Bolt	51. Water pump case	(c) : 55 N·m (5.5 kgf-m, 40.0 lbf-ft)
30. Magnet	41. Washer	52. Bolt	W : Apply SUZUKI Water Resistant Grease.
31. Shifter yoke	42. Bolt	53. Dowel pin	Si : Apply SUZUKI Silicone Seal.
32. Horizontal slider	43. Bolt	54. Key	

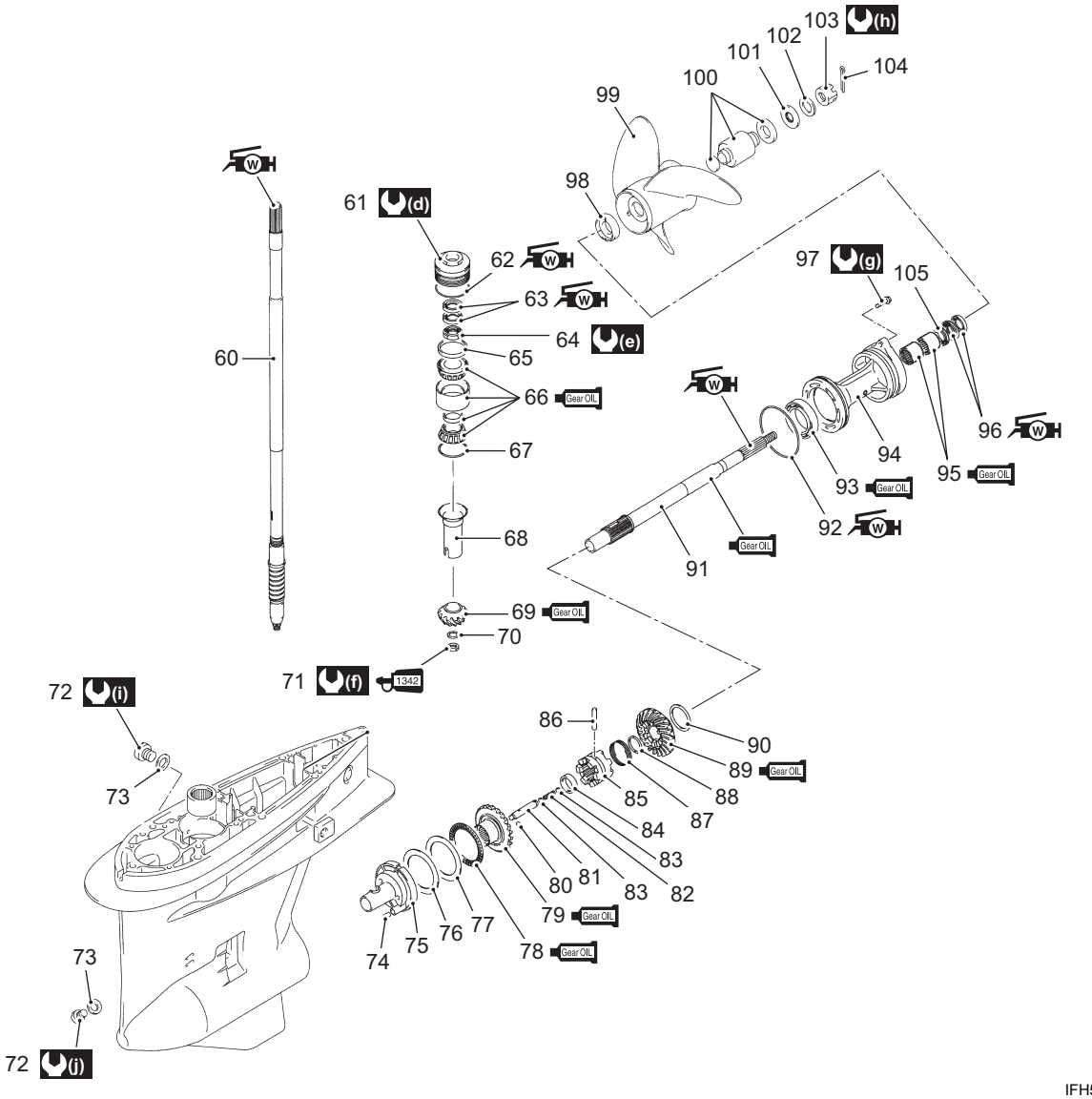

IFH511310003-03

60. Driveshaft	75. Forward gear bearing housing with bearing	90. Shim	105. Circlip
61. Oil seal housing	76. Shim	91. Propeller shaft	(d) : 100 N·m (10.0 kgf-m, 72.5 lbf-ft)
62. O-ring	77. Thrust washer	92. O-ring	(e) : 100 N·m (10.0 kgf-m, 72.5 lbf-ft)
63. Oil seal	78. Forward bearing	93. Bearing	(f) : 145 N·m (14.5 kgf-m, 105.0 lbf-ft)
64. Nut	79. Forward gear	94. Propeller shaft bearing housing	(g) : 23 N·m (2.3 kgf-m, 16.5 lbf-ft)
65. Spacer	80. Detent ball	95. Bearing	(h) : 55 N·m (5.5 kgf-m, 40.0 lbf-ft)
66. Driveshaft bearing	81. Connector pin	96. Oil seal	(i) : 10 N·m (1.0 kgf-m, 7.0 lbf-ft)
67. Shim	82. Detent spring	97. Bolt	(j) : 10 N·m (1.0 kgf-m, 7.0 lbf-ft)
68. Driveshaft collar	83. Detent ball	98. Stopper	W : Apply SUZUKI Water Resistant Grease.
69. Pinion gear	84. Thrust washer	99. Propeller	Gear OIL : Apply SUZUKI Outboard Motor Gear Oil.
70. Washer	85. Clutch dog shifter	100. Propeller bushing set	1342 : Apply SUZUKI Thread Lock 1342.
71. Pinion nut	86. Dog pin	101. Spacer	
72. Plug	87. Dog spring	102. Washer	
73. Gasket	88. Thrust washer	103. Nut	
74. Pin	89. Reverse gear	104. Pin	

Propeller Removal and Installation

CENFH5113106002

⚠ WARNING

Failure to take proper precautions when installing or removing the propeller can result in severe personal injury.

When installing or removing the propeller:

- **Shift into neutral and remove the emergency stop switch lock plate so that the motor cannot be started accidentally.**
- **Wear gloves to protect hands, and lock the propeller by placing a block of wood between the propeller blade tips and the anti-cavitation plate before attempting to remove or install propeller nut.**

Removal

1) Shift to neutral position.
2) Remove cotter pin (1) from propeller nut and remove propeller nut (2).
3) Remove washer (3), spacer (4), propeller (5) and stopper (6) from the propeller shaft.

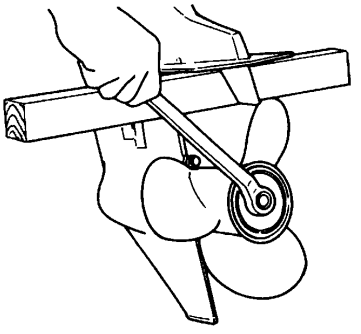

I9J011310001-01

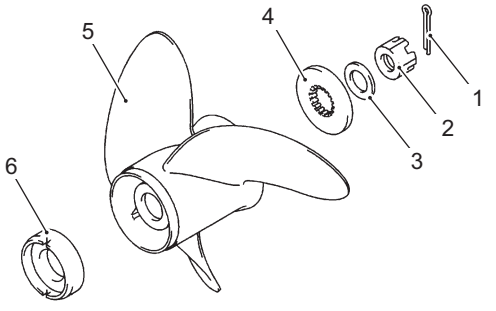

I9J011310002-02

Installation

1) Coat the propeller shaft splines liberally with Suzuki water resistant grease.

: Grease 99000–25350 (SUZUKI Water Resistant Grease EP2 (250 g))

2) Install propeller stopper (1) onto propeller shaft, then slide on the propeller (2).
3) Fit spacer (3), washer (4) and nut (5), then tighten nut to specified torque.
4) Push cotter pin (6) through nut and shaft, then bend to secure.

Tightening torque
Propeller nut (a): 55 N·m (5.5 kgf-m, 40.0 lbf-ft)

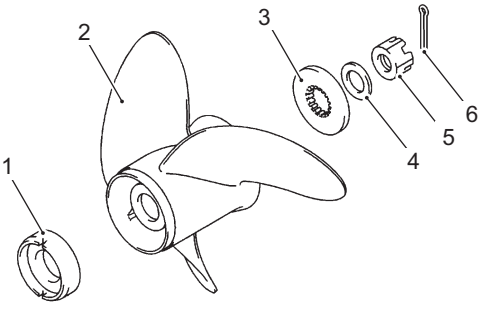

I9J011310017-01

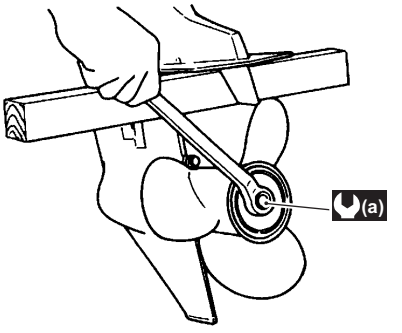

I9J011310003-04

Propeller / Propeller Nut / Cotter Pin Inspection

CENFH5113106003

Refer to “Propeller / Propeller Nut and Cotter Pin Inspection” in Section 0B (Page 0B-20).

Lower Unit Removal and Installation

CENFH5113106004

Removal

⚠ WARNING

Failure to take proper precautions when removing or installing the lower unit can result in severe personal injury.

Always disconnect the battery cable, before removing lower unit.

1) Remove STBD lower side cover.
   Refer to “Lower Side Cover Removal and Installation” in Section 2A (Page 2A-3).
2) Shift to neutral position.
   Remove bolt and trim tab (1).

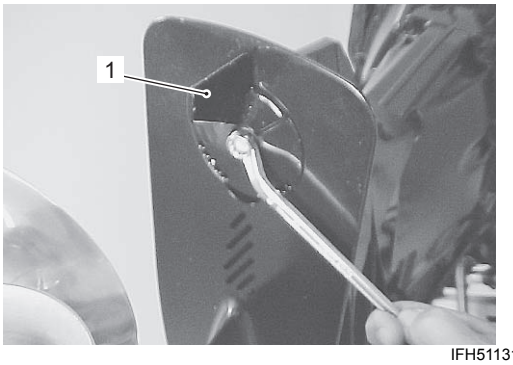

IFH511310004-01

3) Remove seven bolts (2) and separate gearcase (3) from driveshaft housing.

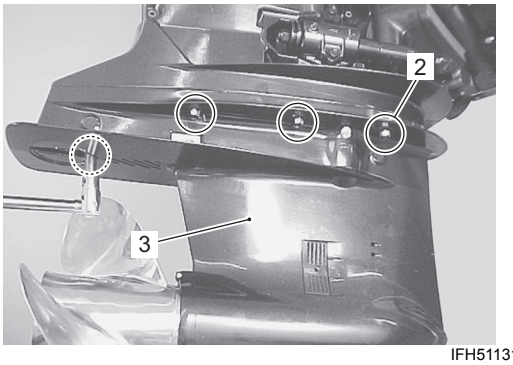

IFH511310005-01

4) Remove clutch rod (4) from clutch shaft (if necessary).

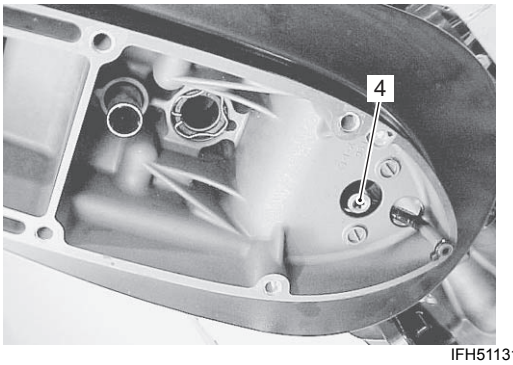

IFH511310006-01

Installation

1) Apply water resistant grease to clutch rod splines, then install clutch rod (1) by aligning clutch rod splines with splines in clutch shaft.

: Grease 99000–25350 (SUZUKI Water Resistant Grease EP2 (250 g))

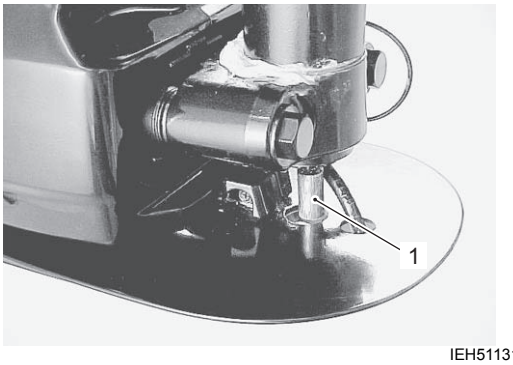

IEH511310007-01

2) Ensure that shift rod (2) is at neutral position.

NOTE

Before installing lower unit, bring shift to Neutral position by turning shift rod right or left.

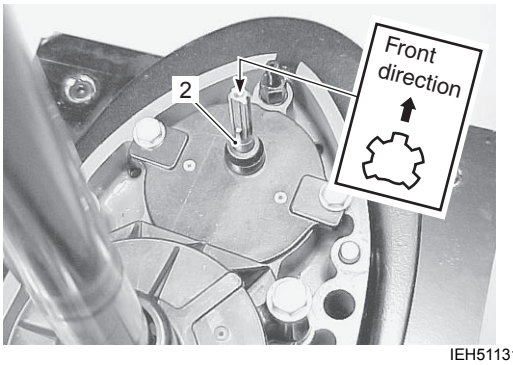

IEH511310008-01

3) Insert two dowel pins (3).
4) Apply water resistant grease to driveshaft and shift rod splines.
5) Apply a light coating of silicone seal to mating surfaces of gearcase and driveshaft housing.

: Sealant 93691–80030 (SUZUKI Silicone Seal (100 g))

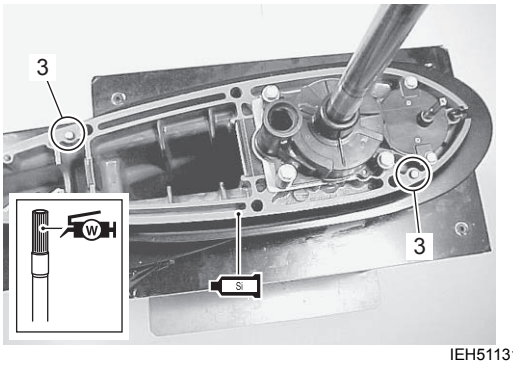

IEH511310009-01

6) Set the clutch control lever (4) at neutral position, then slide the lower unit (5) into place, ensuring that the top of driveshaft engages properly with driven gear shaft and that water tube locates in water pump case outlet.

NOTE

In order for shift rod and clutch rod splines to be aligned correctly, clutch rod may need to be turned slightly right or left.

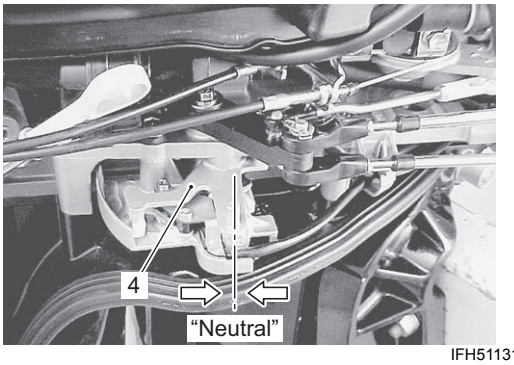

IFH511310007-01

7) Apply silicone seal to seven gearcase bolts (6) and tighten them to specified torque.

Si : Sealant 93691–80030 (SUZUKI Silicone Seal (100 g))

Tightening torque
Gearcase bolt 10 mm (a): 55 N·m (5.5 kgf-m, 40.0 lbf-ft)
Gearcase bolt 12 mm (b): 83 N·m (8.3 kgf-m, 60.0 lbf-ft)

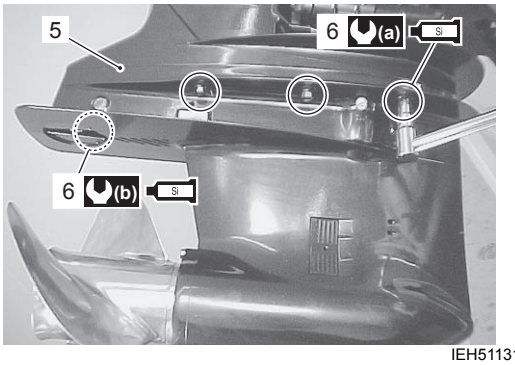

IEH511310011-04

8) Shift the clutch control lever to forward and reverse position from neutral position to check proper gear engagement.

9) Install the lower side cover.
Refer to "Lower Side Cover Removal and Installation" in Section 2A (Page 2A-3).

Water Pump Removal and Installation

CENFH5113106005

Removal

1) Remove the lower unit.
Refer to "Lower Unit Removal and Installation" (Page 3A-6).

2) Loosen four bolts (1), then remove water pump case (2).

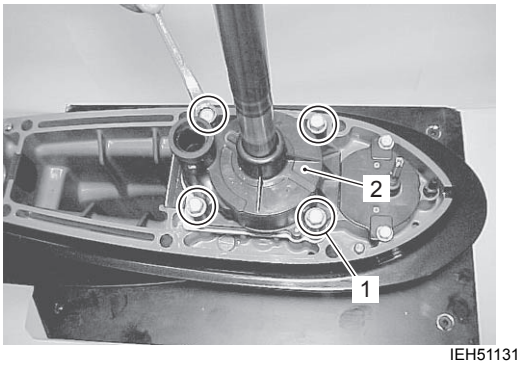

IEH511310012-01

3) Remove impeller (3), impeller key (4), pump under panel (5) and dowel pins (6).
Keep impeller key (4) for reuse and discard the plate gasket.

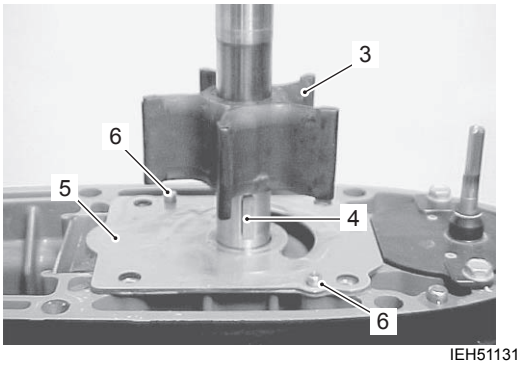

IEH511310013-02

4) Remove inner sleeve (7) and rubber sealing (8).

NOTE

To facilitate the removal of inner sleeve from the pump case, warm up the entire case using a heater like hair dryer.

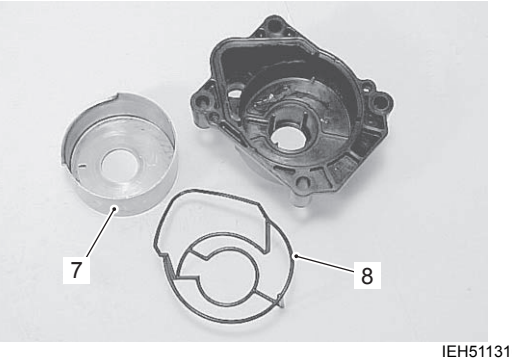

IEH511310014-01

Installation

1) Place the dowel pins (1), under panel gasket (2) and under panel (3) into position.
2) Insert the key (4) in the driveshaft and slide the impeller (5) onto driveshaft, ensuring that key and keyway are aligned.

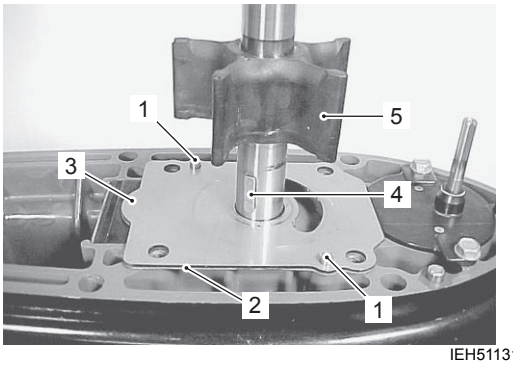

IEH511310015-01

3) Place the sealing (7) into groove of the pump case (6).

NOTE

Do not reuse sealing once removed. Always use new sealing.

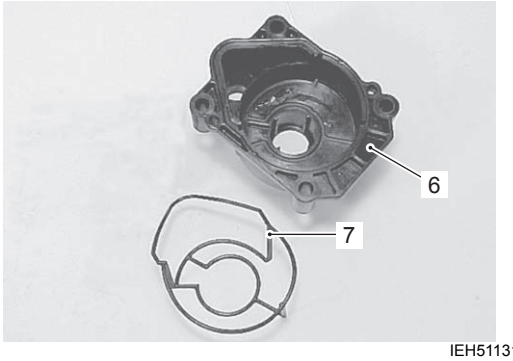

IEH511310016-01

4) Install inner sleeve (8) into the pump case, ensuring that projection of inner sleeve and groove of pump case are aligned.

NOTE

Before installing pump inner sleeve, apply water resistant grease lightly between inner sleeve and pump case mating surfaces.

: Grease 99000–25350 (SUZUKI Water Resistant Grease EP2 (250 g))

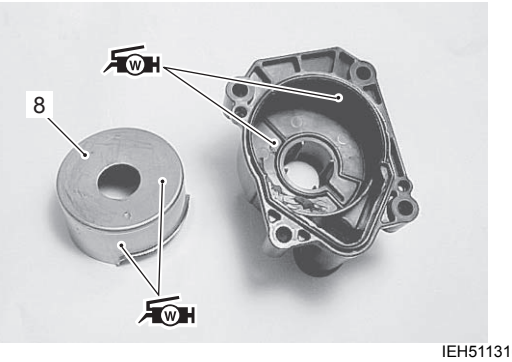

IEH511310017-02

NOTE

Before installing water pump case assembly, apply water resistant grease lightly on pump case inner sleeve and under panel for initial lubrication.

: Grease 99000–25350 (SUZUKI Water Resistant Grease EP2 (250 g))

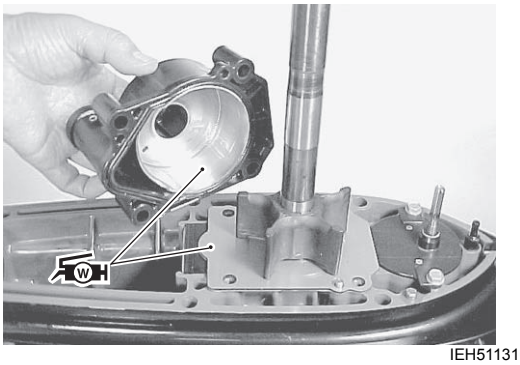

IEH511310018-02

5) Install the pump case assembly (9) while rotating driveshaft clockwise to flex the impeller vanes in the correct direction.
Securely tighten the four pump case bolts (10) to the specified torque.

Tightening torque
Water pump case bolt (a): 17 N·m (1.7 kgf-m, 12.5 lbf-ft)

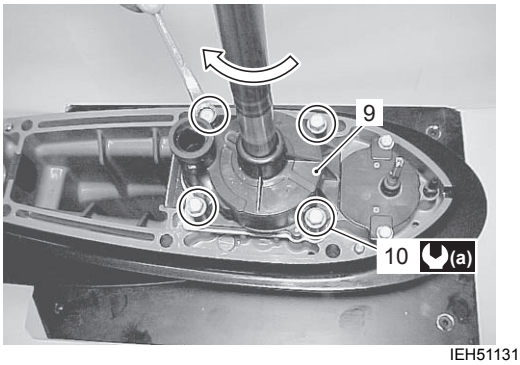

IEH511310019-01

6) Install the lower unit.
Refer to “Lower Unit Removal and Installation” (Page 3A-6).

Water Pump and Related Item Inspection

CENFH5113106006

Inspect the following parts.

- Inspect impeller. Replace if vanes are cut, torn, worn or other abnormal condition.
- Inspect pump case. Replace if cracked, distorted or other abnormal conditions are noted.
- Inspect pump inner sleeve. Replace if worn, cracked, distorted, corroded or other abnormal conditions are noted.
- Inspect under panel. Replace if cracked, distorted, corroded or other abnormal conditions are noted.

NOTE

Do not reuse sealing once removed.
Always use new sealing.

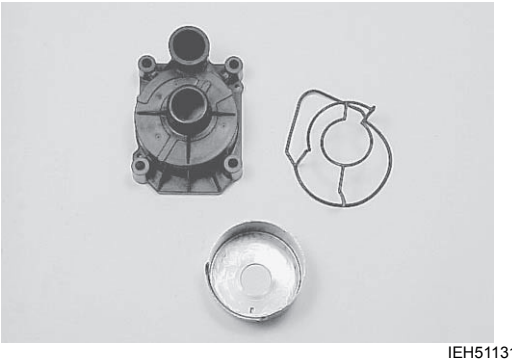

IEH511310020-01

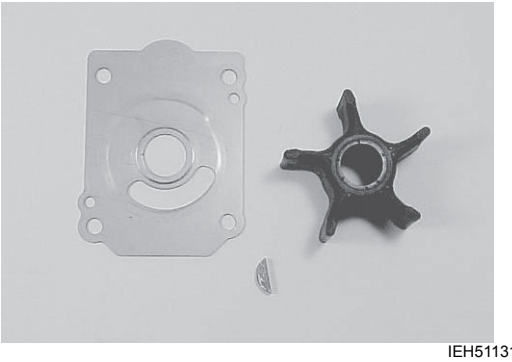

IEH511310021-01

Lower Unit Disassembly

CENFH5113106007

1) Remove the lower unit.
   Refer to “Lower Unit Removal and Installation” (Page 3A-6).
2) Remove the propeller.
   Refer to “Propeller Removal and Installation” (Page 3A-5).
3) Remove the water pump and related parts.
   Refer to “Water Pump Removal and Installation” (Page 3A-7).
4) Place a drain pan under oil drain plug. Remove oil drain plug (1) first then air vent plug (2) and allow gear oil to drain.
   Inspect oil for water, contaminates or metal.

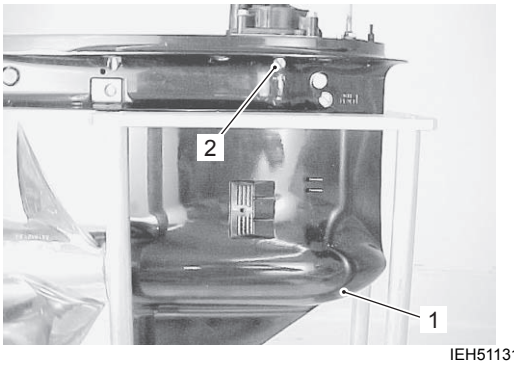

IEH511310108-02

5) Remove two bolts (3) and shift rod guide housing assembly (4).

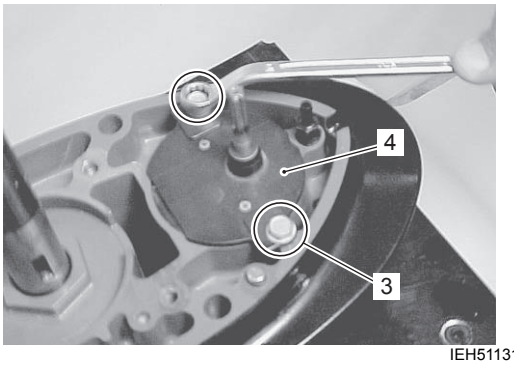

IEH511310023-04

6) Remove two bolts (5) securing the propeller shaft bearing housing to the gearcase.

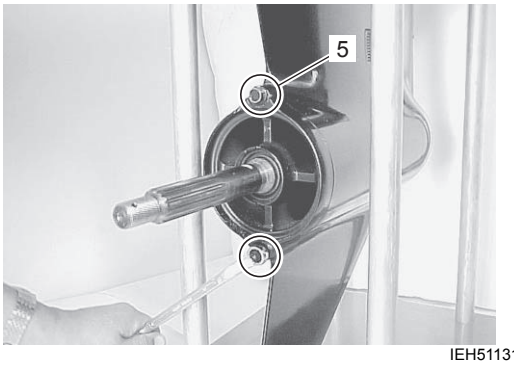

IEH511310024-03

7) Using special tools, pull out the propeller shaft bearing housing.
Remove the propeller shaft and bearing housing assembly (6).

Special tool
(A): 09930–30104 (Sliding hammer)
(B): 09930–30161 (Propeller shaft remover)

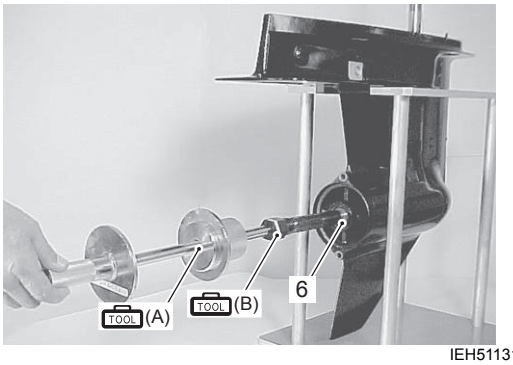

IEH511310025-03

8) Hold the pinion nut securely, then fit special tool to the driveshaft and loosen the pinion nut (7).
Remove pinion nut (7) and washer (8).

Special tool
(C): 09921–29410 (Driveshaft holder)

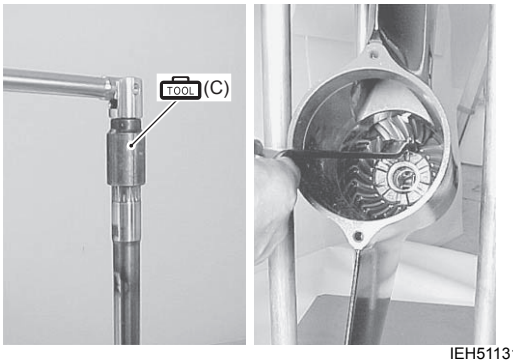

IEH511310026-01

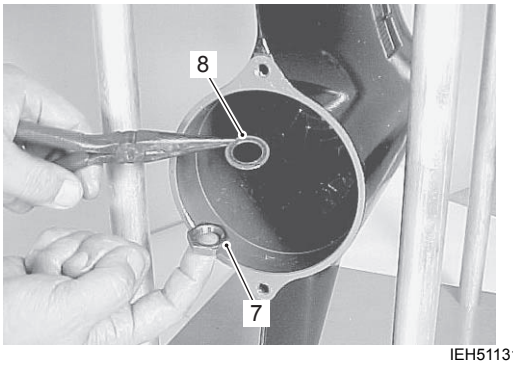

IEH511310027-03

9) Use special tool to unscrew driveshaft oil seal housing (9), then remove oil seal housing from driveshaft.

Special tool
(D): 09926–29310 (Driveshaft housing remover)

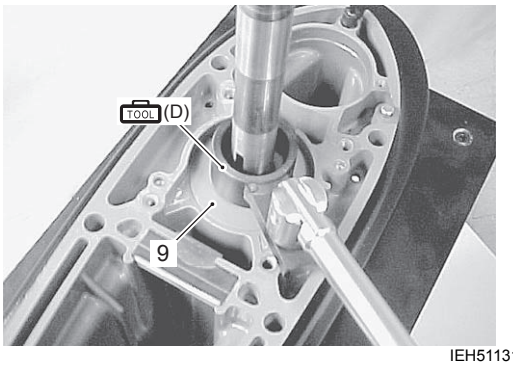

IEH511310028-03

10) Remove driveshaft bearing spacer (10).

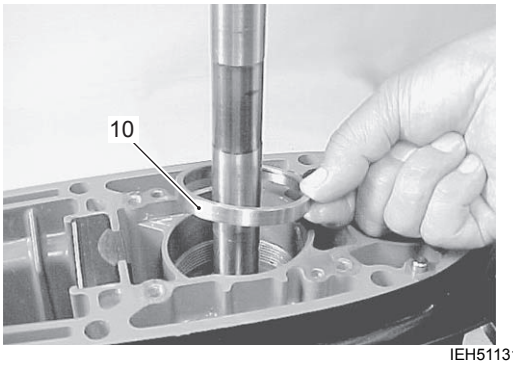

IEH511310029-03

11) Slowly lift out driveshaft assembly (11).
Remove the pinion shim (12).

NOTE

The driveshaft pinion gear bearing contains 22 loose roller bearings. Account for all roller bearings on disassembly.

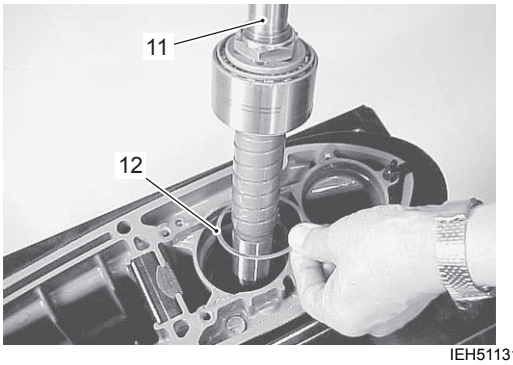

IEH511310030-03

12) Remove the driveshaft collar (13).

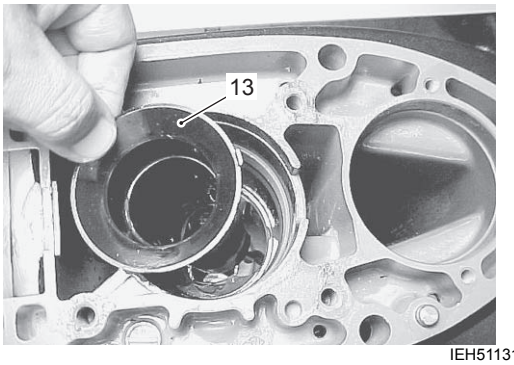

IEH511310031-03

13) Remove the pinion gear (14).
Remove the forward gear (15) and thrust bearing (16).

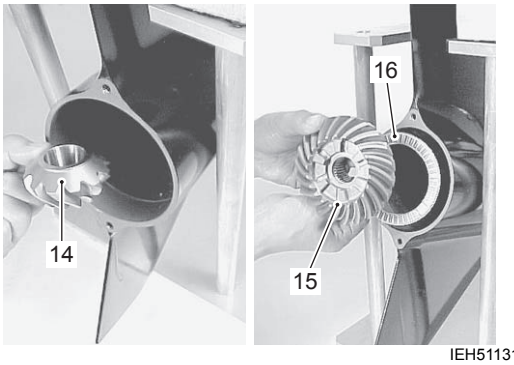

IEH511310032-03

14) Remove the bearing thrust washer (17) and back-up shim (18).

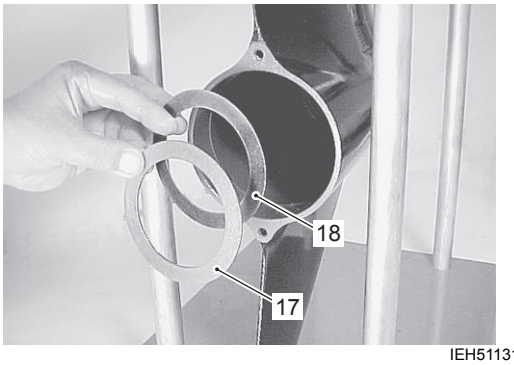

IEH511310033-03

15) Remove the forward gear bearing housing (19).
Account for dowel pin (20).

NOTE

The forward gear radial bearing contains 35 loose roller bearing.
Account for all roller bearings on disassembly.

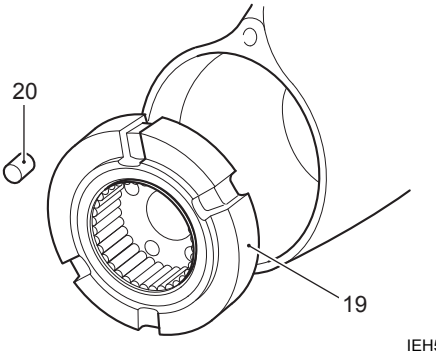

IEH511310034-03

16) To disassemble propeller shaft components, refer to following:

a) Slide propeller shaft away from reverse gear (21) and bearing housing assembly (22).
Account for the reverse gear back-up shim (23) and reverse gear thrust washer (24).

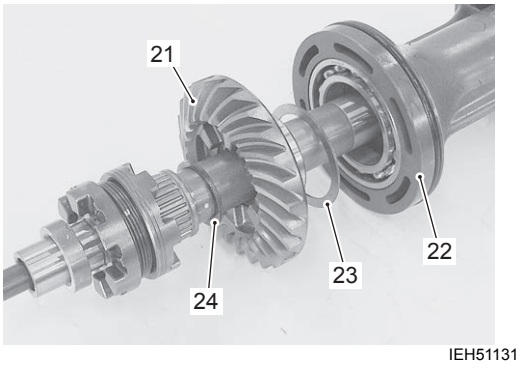

IEH511310035-03

b) Remove horizontal slider (25) and forward gear thrust washer (26).

c) Remove spring (27) from clutch dog shifter (28).

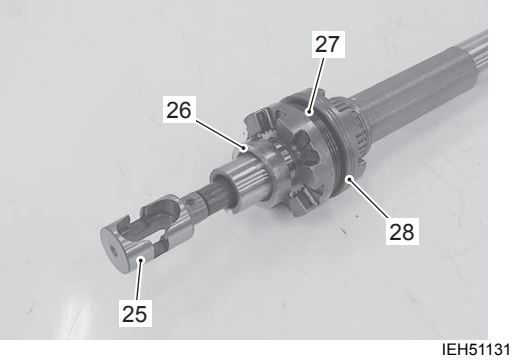

IEH511310036-03

d) Use special tool to push the dog pin (29) out of the clutch dog shifter (28).

Special tool
(E): 09922–89810 (Shift lock pin remover)

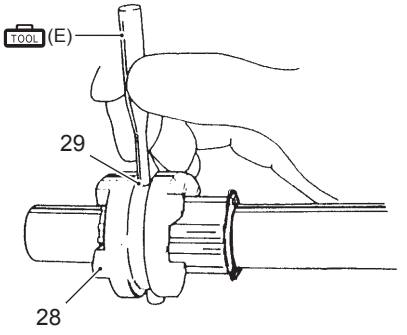

IEH511310037-03

e) Remove clutch dog shifter (28) and connector pin (30) from propeller shaft.

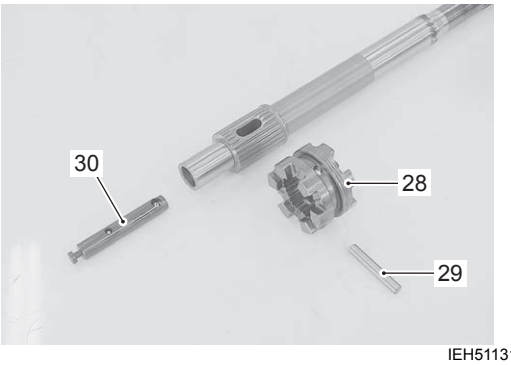

IEH511310038-03

f) Remove large detent ball (31), detent spring (32), large detent ball (33) and two small detent balls (34) from connector pin.

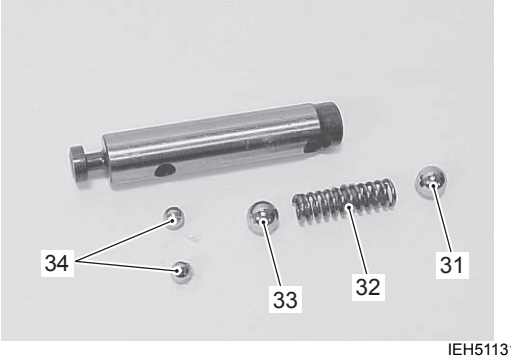

IEH511310039-03

17) To disassemble shift rod components, refer to following:
   a) Remove dust seal (35).
   b) Slide shift rod (36) out of shift rod guide housing (37).
   c) Draw the oil seal (38) out of shift rod guide housing.

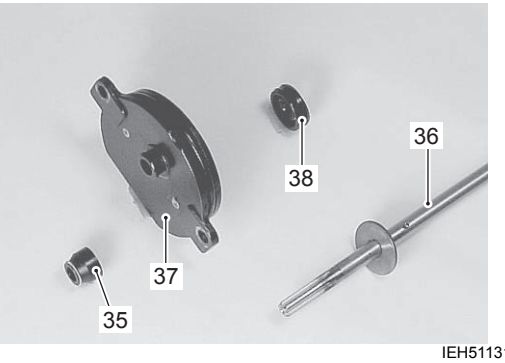

IEH511310040-03

   d) Separate the shifter yoke (39) from shift rod (36) by driving out the pin (40).

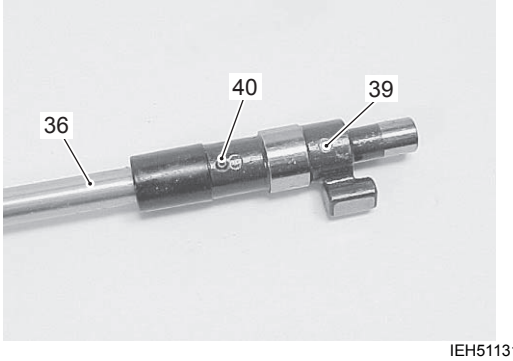

IEH511310041-04

Lower Unit Related Item Inspection

CENFH5113106008

⚠ WARNING

Failure to following proper precautions during use of the compressed air may cause severe personal injury.

Wear safety glasses when using compressed air.

NOTE

- **If any component is worn excessively, cracked, defective or damaged in any way, it must be replaced.**
- **Thoroughly wash all metal components with cleaning solvent and dry with compressed air.**

Gearcase

- Inspect the gearcase. Replace if cracked, damaged or other abnormal conditions are noted.
- Visually check the pinion bearing. Replace gearcase if pitted, rough or other abnormal conditions are noted.



IEH511310042-01

Gears / Bearing

- Inspect forward, reverse and pinion gear teeth and engaging dogs.
  Replace gears if damaged, worn or other abnormal conditions are noted.
- Inspect propeller shaft forward bearing, forward gear thrust bearing.
  Replace bearing if pitted, noisy, rough or other abnormal conditions are noted.

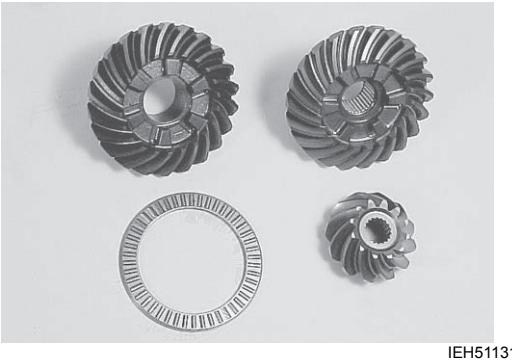

IEH511310043-01

Forward Gear Bearing Housing

- Inspect forward gear bearing housing.
  Replace if cracked, damaged or other abnormal conditions are noted.
- Visually check bearing. Replace if pitted, rough or other abnormal conditions are noted.

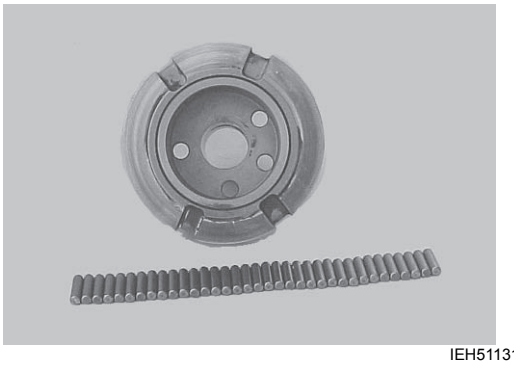

IEH511310044-01

Propeller Shaft Components

- Inspect horizontal slider and connector pin.
  Replace if worn, damaged or other abnormal conditions are noted.
- Inspect clutch dog shifter. Replace if chipped, worn, damaged or other abnormal conditions are noted.
- Inspect dog pin. Replace if bent, worn or other abnormal conditions are noted.
- Inspect detent balls. Replace if wear, damage or other abnormal conditions are noted.
- Inspect propeller shaft/splines. Replace if worn, twisted, damaged or other abnormal conditions are noted.

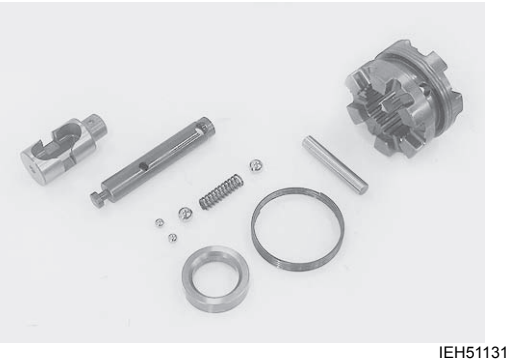

IEH511310045-02



IEH511310046-01

- Check detent spring by measuring its free length. If free length is not within specifications, replace detent spring.

Detent spring free length “a”
Standard: 27.8 mm (1.09 in.)
Service limit: 25.0 mm (0.98 in.)

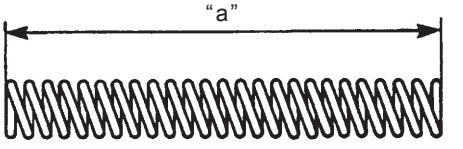

IEH511310047-01

Propeller Shaft Bearing Housing

- Inspect housing. Replace if cracked, damaged or other abnormal conditions are noted.
- Inspect reverse gear bearing. Replace bearing if pitted, noisy, rough or other abnormal conditions are noted.
- Check condition of oil seal and O-ring.
  Replace oil seal and O-ring if nicked, cut, worn or other abnormal conditions are noted.



IEH511310048-01



IEH511310049-01

Shift Rod Guide Housing Components

- Inspect shift rod guide housing. Replace if cracked, damaged or other abnormal conditions are noted.
- Inspect shifter yoke. Replace if worn, damaged or other abnormal conditions are noted.
- Inspect shift rod/splines. Replace if worn, twisted, damaged or other abnormal conditions are noted.
- Inspect O-ring. Replace if nicked, cut, torn, swollen or other abnormal conditions are noted.
- Inspect oil seal and dust seal. Replace if nicked, cut, worn or other abnormal conditions are noted.

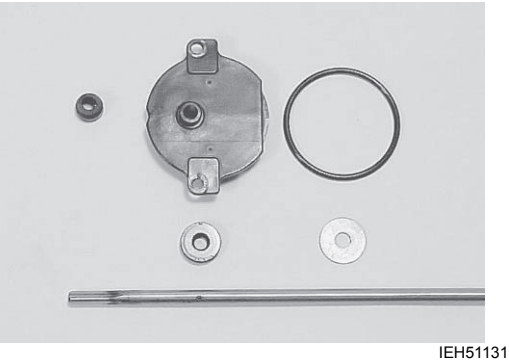

IEH511310050-01

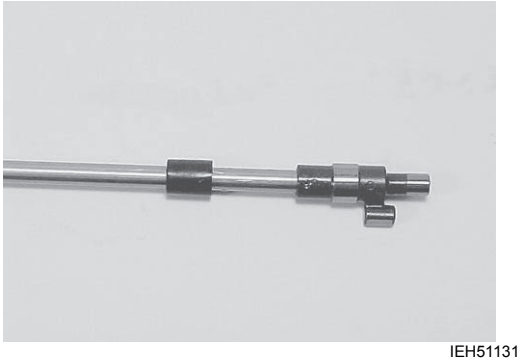

IEH511310051-01

Driveshaft Oil Seal Housing

- Inspect housing. Replace if cracked, damaged or other abnormal conditions are noted.
- Check condition of oil seals. Replace if nicked, cut, worn or other abnormal conditions are noted.
- Inspect O-ring. Replace if worn, nicked, cut or other abnormal conditions are noted.

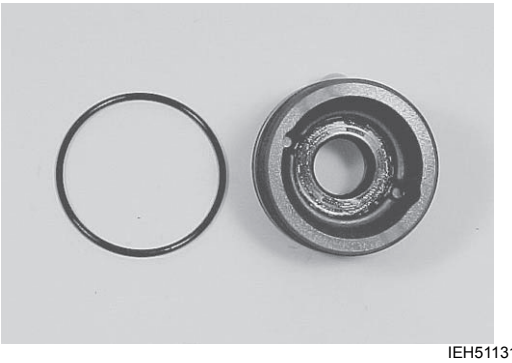

IEH511310052-01

Driveshaft

- Inspect driveshaft/splines. Replace if worn, twisted, damaged or other abnormal conditions are noted.
- Inspect driveshaft bearing, replace if pitted, noisy, rough or other abnormal conditions are noted.

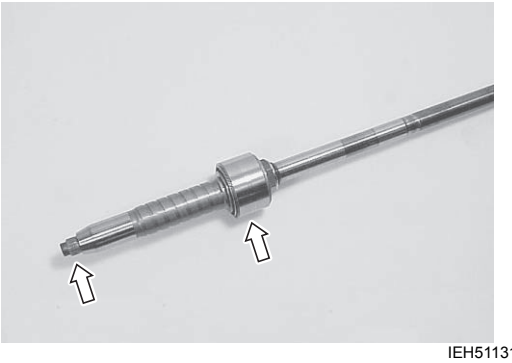

IEH511310053-01

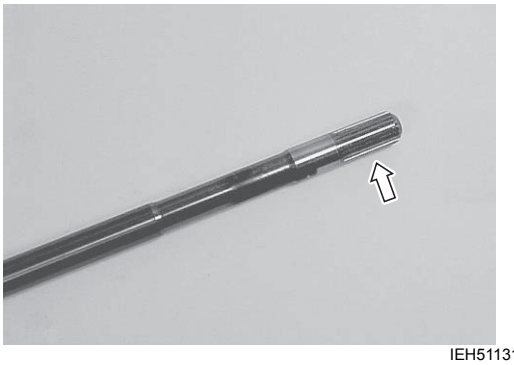

IEH511310054-01

Propeller Shaft Oil Seal Replacement

CENFH5113106009

1) Remove the propeller shaft bearing housing. Refer to “Lower Unit Disassembly” (Page 3A-9).



IFH511310008-01

2) Extract seals (1) with oil seal remover.

NOTICE

Removing the oil seal can cause damage to the seal lips, causing oil to leak.

Do not reuse the oil seal once removed. Always use new one.

Special tool

TOOL (A): 09913–50121 (Oil seal remover)

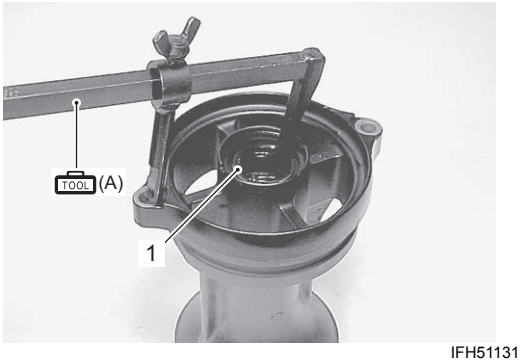

IFH511310009-01

3) Apply water resistant grease to the inner circumference of the housing.

: Grease 99000–25350 (SUZUKI Water Resistant Grease EP2 (250 g))

4) Using an oil seal installer, drive the two oil seals (one at a time) into the propeller shaft bearing housing. The lipped portion of the seal must face towards the propeller.
Apply water resistant grease to the seal lips.

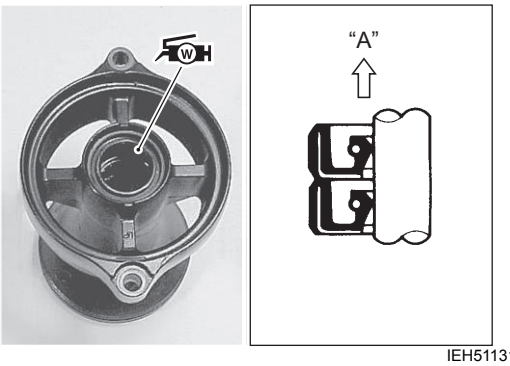

IEH511310057-01

"A": Direction of propeller

5) Assemble the propeller shaft bearing housing.
Refer to "Lower Unit Assembly" (Page 3A-16).

Driveshaft Oil Seal Replacement

CENFH5113106010

1) Remove the driveshaft oil seal housing.
Refer to "Lower Unit Disassembly" (Page 3A-9).
2) Using special tool, remove two oil seals out of the driveshaft oil seal housing.

Special tool
(A): 09913–50121 (Oil seal remover)

NOTICE

Removing the oil seal can cause damage to the seal lips, causing oil to leak.
Do not reuse the oil seal once removed.
Always use new one.

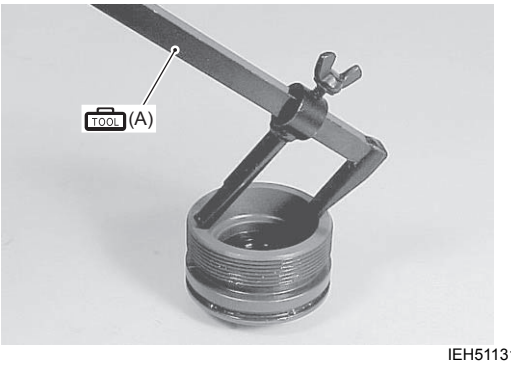

IEH511310058-01

3) Apply water resistant grease to inner circumference of driveshaft oil seal housing.

: Grease 99000–25350 (SUZUKI Water Resistant Grease EP2 (250 g))

4) Grease the inner lips of oil seal.
With the lips facing away from driveshaft bearing, place seal in position and drive it into the oil seal housing.

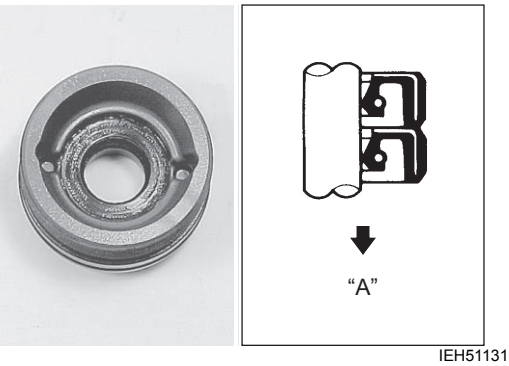

IEH511310059-02

"A": Direction of water pump case

5) Assemble the driveshaft oil seal housing.
Refer to "Lower Unit Assembly" (Page 3A-16).

Lower Unit Assembly

CENFH5113106011

Assembly is in reverse order of disassembly with special attention to the following steps.

NOTICE

Failure to correctly adjust the gear position will result in lower unit damage.
Before final assembly of lower unit, be absolutely certain that all gear contact, shim adjustments and tolerances are correct.
Refer to "Lower Unit Gears - Shimming and Adjustment" (Page 3A-24).

NOTE

- **Make sure that all parts used in assembly are clean and lubricated.**
- **It is recommended that all seals, gaskets and O-rings be replaced with new on assembly.**
- **After assembly, check parts for tightness and smoothness of operation.**

Forward Gear Bearing Housing

- Install dowel pin (1) and forward gear bearing housing (2).

NOTE

Before installing forward gear, check for correct amount and position of forward gear radial bearing rollers.
Use oil soluble grease to retain bearing rollers.

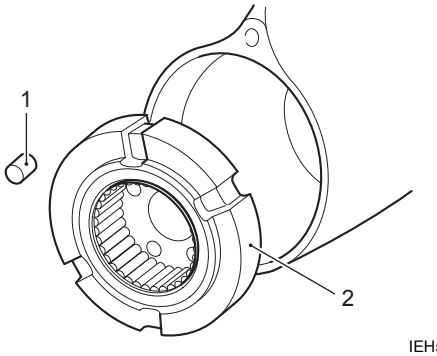

IEH511310060-01

Forward Gear

- Place the forward gear back-up shim (1), thrust washer (2), forward gear thrust bearing (3) in position, then install forward gear (4).

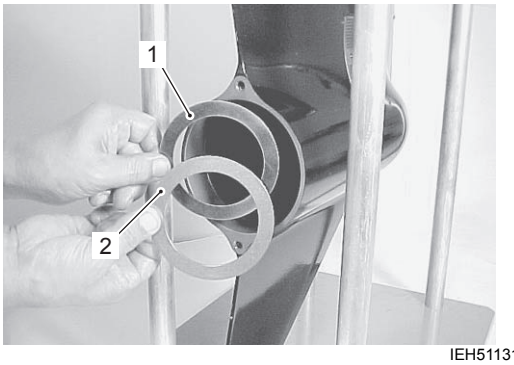

IEH511310061-01

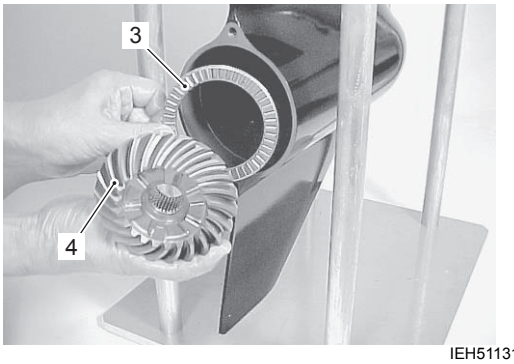

IEH511310062-01

Driveshaft Collar

- Install driveshaft collar (1).

NOTE

The tongue “A” of collar must be located into groove “B” on the gearcase.

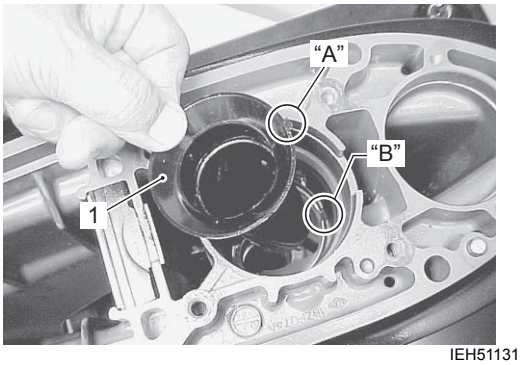

IEH511310063-01

Pinion Gear

- Place pinion gear in gearcase.

NOTE

Before installing pinion gear, check for correct amount and position of pinion bearing rollers.
Use oil soluble grease to retain bearing rollers.



IEH511310064-01

Driveshaft

- Install pinion shim (1), then lower the driveshaft assembly (2) down into the gearcase until the bottom of shaft protrudes through center of pinion.

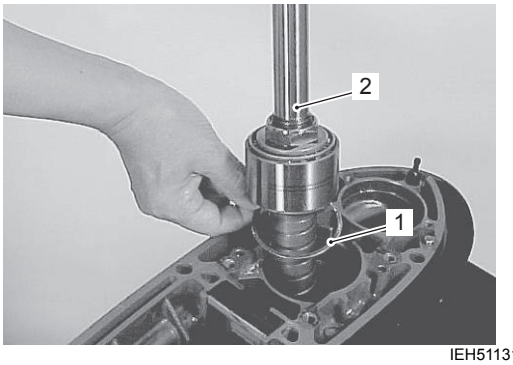

IEH511310065-02

Driveshaft Oil Seal Housing

- Apply water resistant grease to the driveshaft oil seal.
- Apply water resistant grease to O-ring (1), then install O-ring into groove on the driveshaft oil seal housing.

: Grease 99000–25350 (SUZUKI Water Resistant Grease EP2 (250 g))

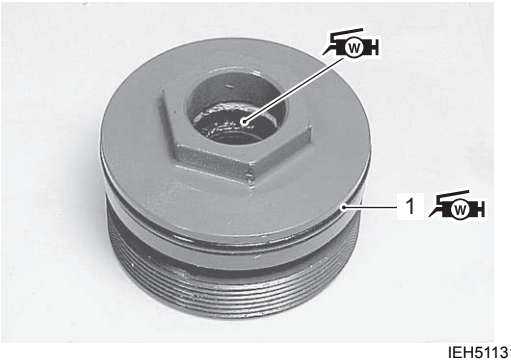

IEH511310066-01

- Install driveshaft bearing spacer (2).

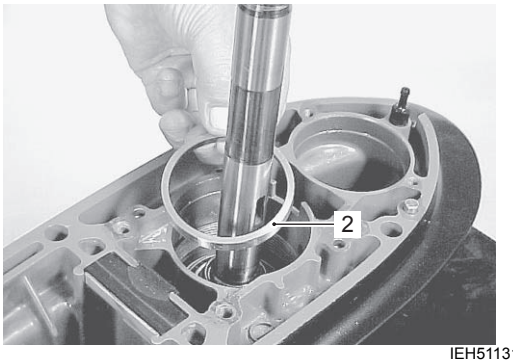

IEH511310067-02

- Install driveshaft oil seal housing on gearcase, then tighten oil seal housing to specified torque.

Special tool
(A): 09926–29310 (Driveshaft housing remover)

Tightening torque
Driveshaft oil seal housing: 100 N·m (10.0 kgf-m, 72.5 lbf-ft)

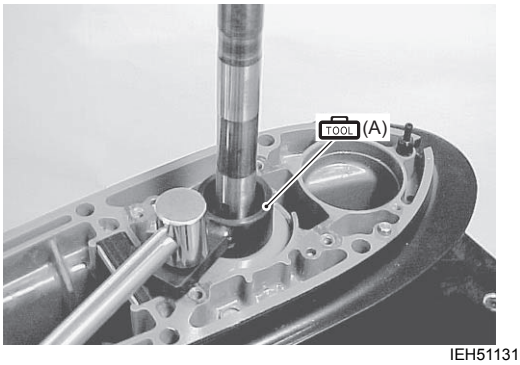

IEH511310068-01

Pinion Nut

- Apply thread lock “1342” to the threads of pinion nut (2) before threading it onto driveshaft.

: Thread lock cement 99000–32050 (SUZUKI Thread Lock 1342 (50 g))

NOTE

It is recommended the original pinion nut be used for the purposes of shimming during repair. A new pinion nut should be used on final assembly.

- Install washer (1), pinion nut (2), then tighten nut to specified torque.

Tightening torque
Pinion nut (a): 145 N·m (14.5 kgf-m, 105.0 lbf-ft)

Special tool
(A): 09921–29410 (Driveshaft holder)

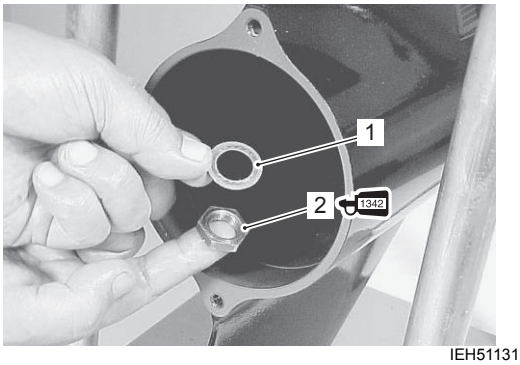

IEH511310069-01

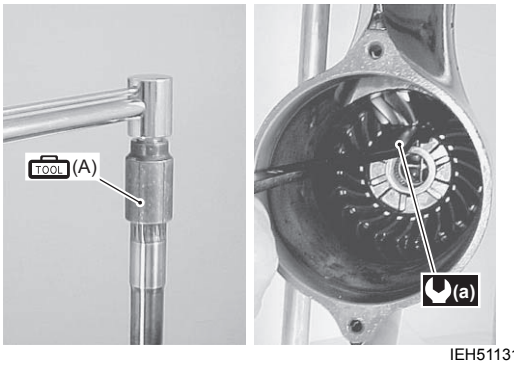

IEH511310070-01

Propeller Shaft

- Slide the clutch dog shifter (1) onto the propeller shaft (2).

NOTE

The marked side with identification grooves "A" of the clutch dog shifter must face towards reverse gear.

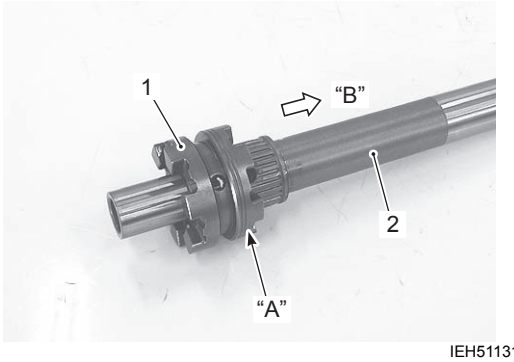

IEH511310071-01

"A": I.D. groove	"B": Reverse gear side

- Insert two small detent balls (4), large detent ball (5), detent spring (6) and large detent ball (7) into connector pin (3).
  Then depress detent ball (7) and temporarily insert stopper pin "C" into dog pin hole of connector pin, as shown in figure.

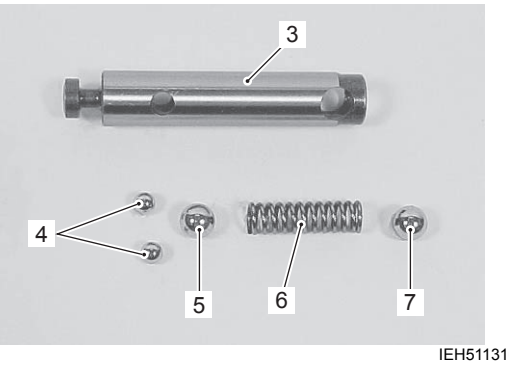

IEH511310072-01

NOTE

Temporarily insert a gearcase dowel pin "C" into the connector pin to prevent the detent ball from falling out.

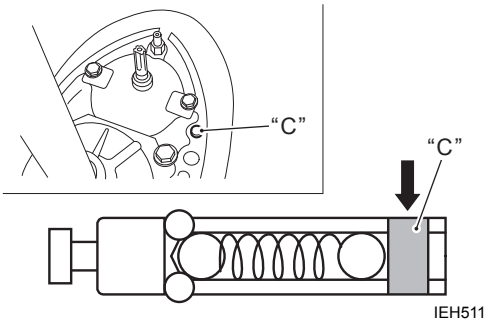

IEH511310073-02

- Insert the connector pin (3) (with detent balls) into propeller shaft (2).
- Align the holes in the clutch dog shifter and connector pin and then slide the dog pin (8) through both clutch dog shifter and connector pin. (save the temporarily installed dowel pin pushed out as the dog pin is inserted.)
- Install the dog pin retaining spring (9), ensuring that it fits snugly into the groove on the dog shifter.

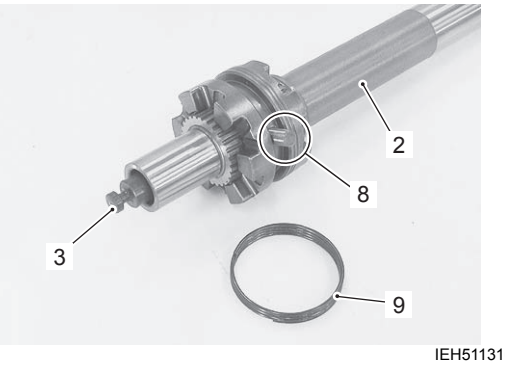

IEH511310074-02

Propeller Shaft / Bearing Housing

- Place the forward thrust washer (5) and reverse thrust washer (1) on the propeller shaft.
- Install back-up shim (3) and reverse gear (2) to propeller shaft bearing housing (4).
- Slide propeller shaft into reverse gear and propeller shaft bearing housing.

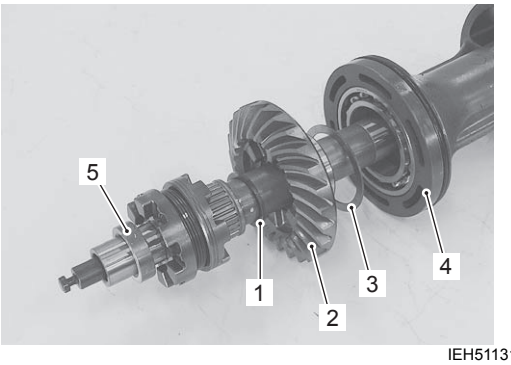

IEH511310075-01

- Assemble horizontal slider (6) to connector pin.
- Apply water resistant grease to bearing housing O-ring (7).

: Grease 99000–25350 (SUZUKI Water Resistant Grease EP2 (250 g))

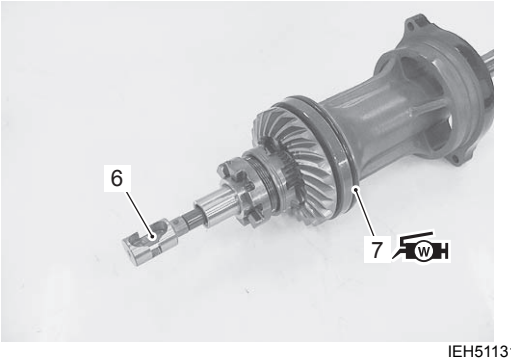

IEH511310076-02

NOTE

Before installing propeller shaft/bearing housing assembly, move shifter dog to bring horizontal slider to the neutral position.

- Using special tools, install the propeller shaft and housing assembly in the gear case with the mark “UP” of housing toward upside.

Special tool
(A): 09922–59410 (Propeller shaft housing installer)

Special tool
(B): 09922–59420 (Housing installer handle)

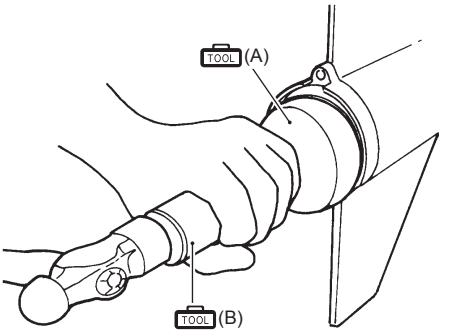

IEH511310077-01

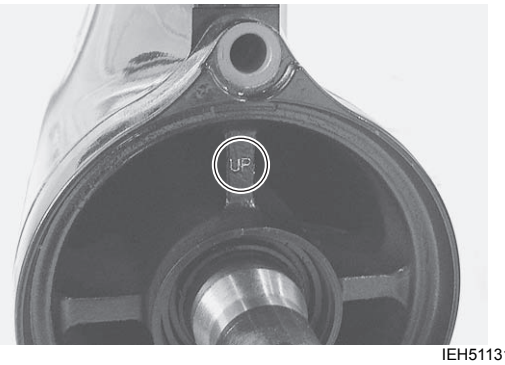

IEH511310109-02

- When the housing is fully seated, tighten both retaining bolts to the specified torque.

Tightening torque
Bearing housing bolt (a): 23 N·m (2.3 kgf-m, 16.5 lbf-ft)

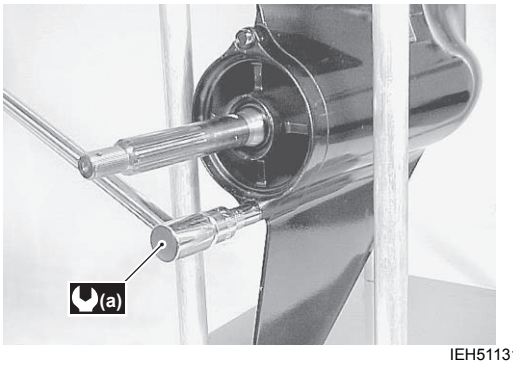

IEH511310078-01

Checking Propeller Shaft Thrust Play
Check propeller shaft thrust play.
Refer to “Lower Unit Gears - Shimming and Adjustment” (Page 3A-24).

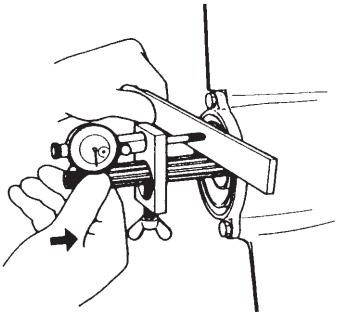

IEH511310079-01

Shift Rod Guide Housing

- Apply water resistant grease to the oil seal.

  : Grease 99000–25350 (SUZUKI Water Resistant Grease EP2 (250 g))

- Using an oil seal installer, drive the oil seal (1) into the shift rod guide housing (2).
  The lipped portion of oil seal must face towards the driveshaft housing.

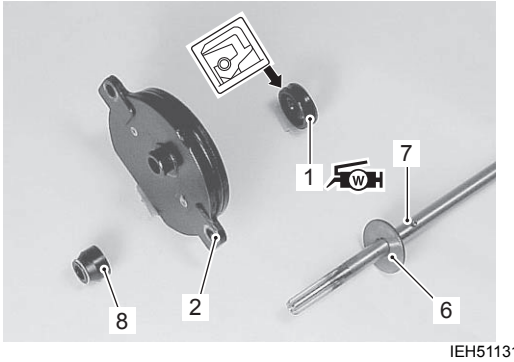

IEH511310080-01

- Attach shifter yoke (3) to shift rod (4), then insert pin (5).

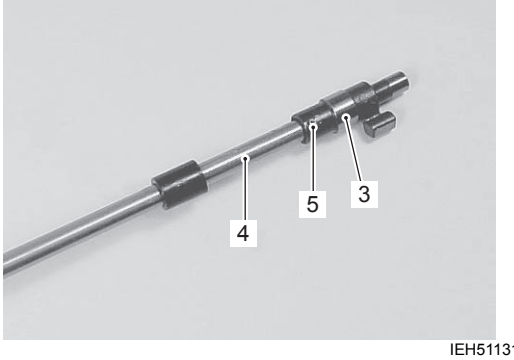

IEH511310081-01

- Install pin (7) and washer (6) to shift rod, then slide shift rod guide housing onto shift rod.
- Install dust seal (8) to shift rod guide housing.

NOTE

Be sure the horizontal slider (9) is in the neutral position before installing the shift unit (shift rod guide housing assembly.).

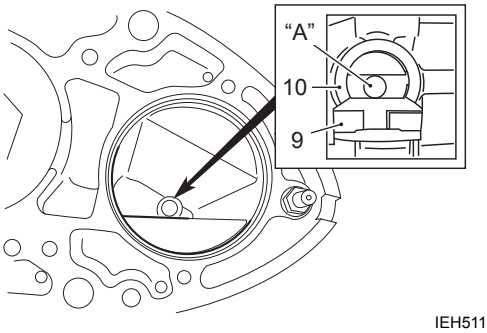

IEH511310082-01

9.	Horizontal slider
10.	Forward gear bearing housing
“A”:	Shift rod center

- Apply water resistant grease to the shift rod guide housing O-ring.

: Grease 99000–25350 (SUZUKI Water Resistant Grease EP2 (250 g))

NOTE

Before installing shift rod guide housing assembly, bring shifter yoke to Neutral position by turning shift rod right or left.

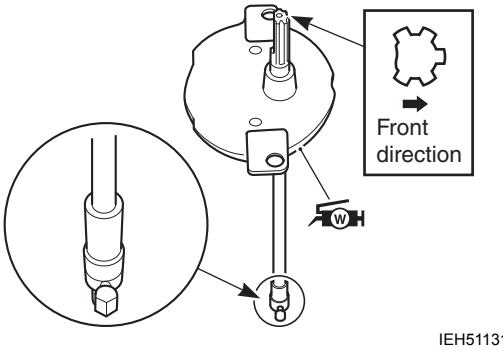

IEH511310083-01

- Install shift rod guide housing assembly by aligning shifter yoke (3) with groove in horizontal slider (9), then tighten two housing bolts (11) securely.

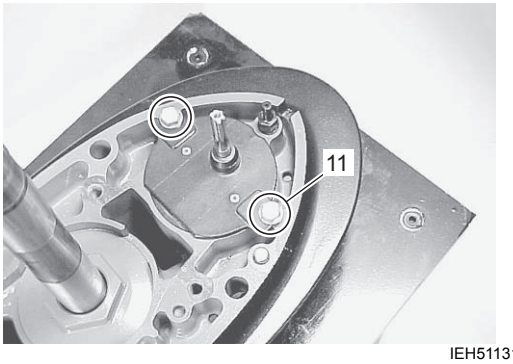

IEH511310084-01

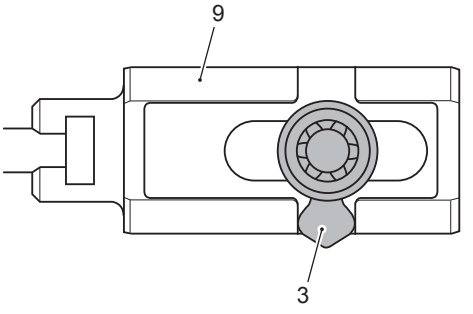

IEH511310085-01

- Turn shift rod from Neutral position to Forward and Reverse position to check proper gear engagement.

Leakage Check

Check for leakage of oil seal and O-ring when applying specified pressure inside of the gearcase.

1) Install the test tool into the oil drain hole.
2) Connect the air pump to the tester.
3) Rotate driveshaft and propeller shaft clockwise several times and then apply specified pressure for the test.

NOTICE

Failure to correctly apply the test pressure will result in oil seal damage.

Do not exceed pressure of 110 kPa (1.1 kg/cm², 15.6 psi.).

NOTE

Apply low initial pressure of 20 – 40 kPa, (0.2 – 0.4 kg/cm², 2.8 – 5.7 psi) first, then apply specified pressure.

Special tool

TOOL (A): 09950–69512 (Gearcase oil leakage tester)

TOOL (B): 09952–99320 (Hand air pump)

Leakage pressure test

100 kPa (1.0 kg/cm², 14.2 psi.)

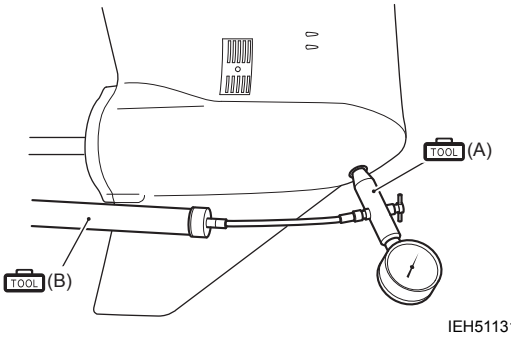

IEH511310086-01

4) Once stabilized, pressure should remain steady for at least 5 min.
   If pressure does not fall, sealing performance is correct.

Water Pump
Install the water pump and related parts.
Refer to “Lower Unit Removal and Installation” (Page 3A-6) and “Water Pump Removal and Installation” (Page 3A-7).

Propeller
Install the propeller.
Refer to “Propeller Removal and Installation” (Page 3A-5).

Lower Unit
Install the Lower Unit.
Refer to “Lower Unit Removal and Installation” (Page 3A-6).

Trim Tab Adjustment

CENFH5113106012

The trim tab counteracts or minimizes propeller torque pull felt through the steering system.
If the steering is pulled to the starboard or port side, adjust the trim tab with following procedure:

1) Loosen the trim tab bolt (1).

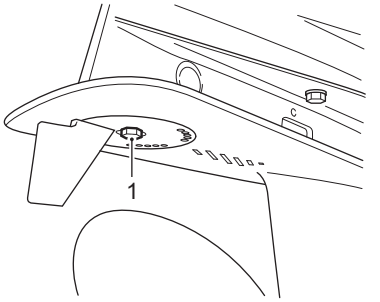

IEH511310087-01

2) Changing the trim tab setting.
   - To compensate for a veer to starboard, set the trailing edge of tab (2) to the right (as viewed from behind).
   - To compensate for a veer to port, set the trailing edge of tab (2) to the left.

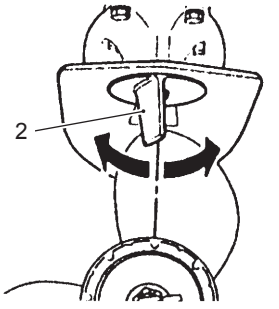

IEH511310088-01

3) Tighten the bolt of trim tab.
4) Test drive the boat and repeat the procedure 1) – 3) to set the trim tab in the best position.
   With a properly adjusted trim tab, steering should be neutral and there should be no tendency for the steering to be pulled to either port or starboard.

Lower Unit Gears - Shimming and Adjustment

CENFH5113106013

If the lower unit has been rebuilt or has had components replaced, shimming for the correct gear contact and backlash will have to be checked and/or adjusted to ensure smooth, reliable operation.

Shim/Washer and mounting position

Item	Available thickness (mm)	Design specification thickness (mm)
Pinion gear back-up shim	**0.45, 0.50, 0.55, 0.60, 0.65, 0.70, 0.75, 0.80, 0.85, 0.90**	**1.0**
Forward gear back-up shim	**0.50, 0.55, 0.60, 0.65, 0.70, 0.75, 0.80, 0.85, 0.90, 0.95, 1.0**	**1.0**
Forward gear thrust washer	**9.5**	**9.5**
Propeller shaft reverse thrust washer	**1.5, 1.7, 1.9, 2.1, 2.2, 2.3, 2.4, 2.5, 2.6, 2.7, 2.8**	**2.0**
Reverse gear back-up shim	**1.0, 1.1, 1.2, 1.3, 1.4, 1.5, 1.6, 1.7**	**1.5**

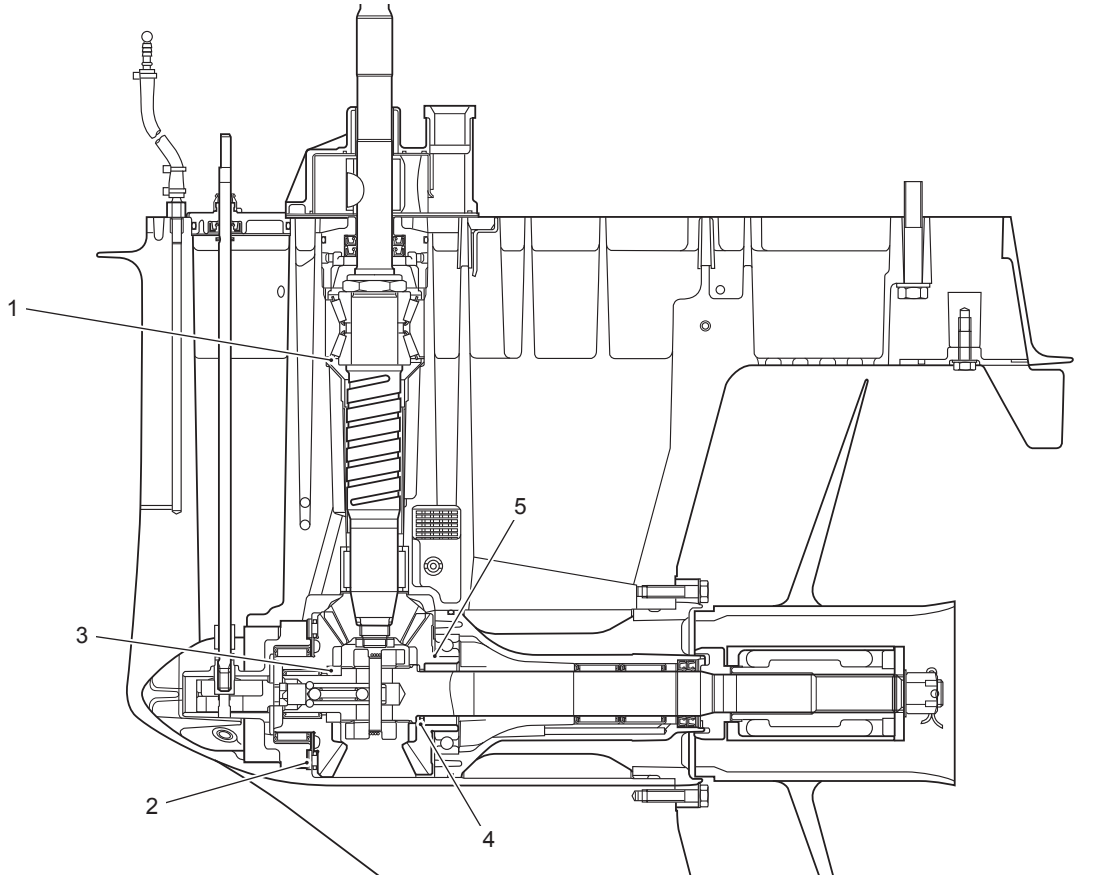

IEH511310089-02

1. Pinion gear back-up shim	3. Forward gear thrust washer	5. Reverse gear back-up shim
2. Forward gear back-up shim	4. Propeller shaft reverse thrust washer	

Forward Gear / Pinion Gear Back-Up Shim Adjustment

Follow the procedure below to adjust forward gear/pinion gear.

Prior to adjustment

1) Install standard pinion gear back-up shim thickness modified according to ± design specification mark on the gear.

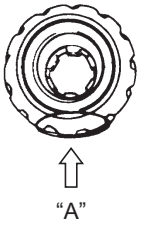

IEH511310090-01

"A": ± design spec. mark

2) Correctly assemble driveshaft oil seal housing, driveshaft, forward gear, pinion gear and related components.
   Refer to "Lower Unit Assembly" (Page 3A-16).
   Do not install reverse gear at this time.
3) Tighten pinion nut to specified torque.

Tightening torque
Pinion nut: 145 N·m (14.5 kgf-m, 105.0 lbf-ft)

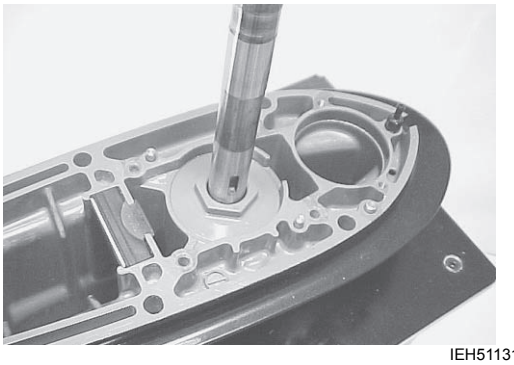

IEH511310091-01

Adjusting gear backlash

1) Assemble special tools to driveshaft as shown in figure.

Special tool
TOOL (A): 09900–20602 (Dial gauge)
TOOL (B): 09900–20701 (Magnetic stand)
TOOL (C): 09952–09310 (Backlash indicator tool)

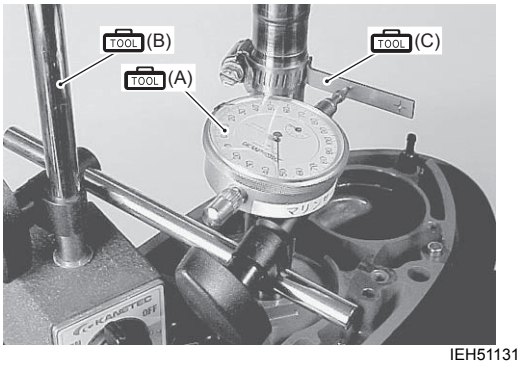

IEH511310092-01

2) Push forward gear inward and hold it by hand, align dial gauge pointer at 90° to the mark on the backlash indicator tool and read backlash on dial gauge by lightly moving driveshaft clockwise and counterclockwise by hand.

Gear backlash
Approx. 0.3 – 0.5 mm (0.012 – 0.020 in.)

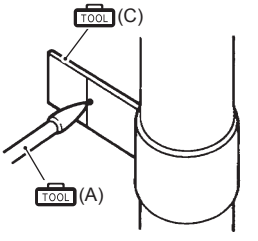

IEH511310093-01

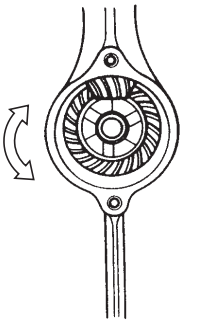

IEH511310094-01

- If the backlash measured is larger than the specification, add the amount over the specification to the temporary use forward gear back-up shim and install this shim.
- If the backlash measured is smaller than the specification, subtract the amount less than the specification from the temporary use forward gear back-up shim and install this shim.

Checking and adjusting tooth contact pattern (Pinion gear and forward gear)
Check tooth contact pattern using the following procedure:

1) To assess tooth contact, apply a light coat of Prussian Blue on the convex surface of the forward gear.
2) Install the propeller shaft and housing assembly (minus reverse gear and internal components).
3) Push the propeller shaft inward and hold in position.

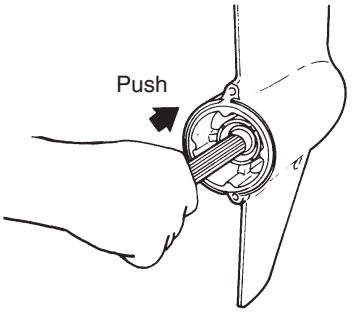

IEH511310095-01

4) Using the driveshaft holder tool, rotate the driveshaft 5 – 6 times.

Special tool
TOOL (A): 09921–29410 (Driveshaft holder)



IEH511310096-01

5) Carefully pull out propeller shaft and housing to check tooth contact pattern.

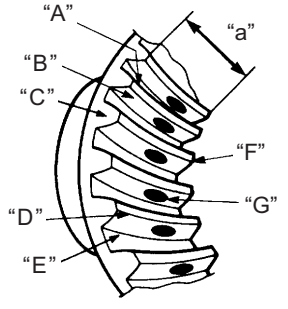

I9J011310013-02

"A": Concave side	"E": Tooth bottom
"B": Convex side	"F": Toe
"C": Heel	"G": Tooth contact pattern
"D": Tooth top	"a": Tooth width

Optimum tooth contact
The optimum tooth contact is shown in the figure.
A shim adjustment may be necessary to obtain this contact pattern.

NOTE

Gear backlash should be checked when increasing or decreasing shim thickness to adjust tooth contact.

Optimum tooth contact

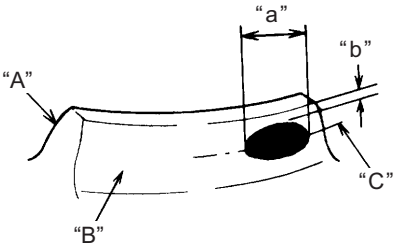

I9J011310014-02

"A": Heel	"a": Approx. 1/3 of tooth width
"B": Convex side	"b": Approx. 1 mm (0.04 in)
"C": Toe	

Example [A]
Incorrect topside toe contact:
Correction measures:

- Decrease thickness of forward gear shim.
- Slightly decrease pinion gear shim thickness.

NOTICE

Setting the tooth contact in the top side toe contact may cause damage and chipping on forward and pinion gears.
Do not set the tooth contact as such top side toe contact.

Example of incorrect



IEH511310097-01

"A": Heel	"C": Toe

Example [B]
Incorrect bottom side toe contact:
Correction measures:

- Increase thickness of forward gear shim.
- Slightly increase pinion gear shim thickness.

NOTICE

Setting the tooth contact in the bottom side toe contact may cause chipping on pinion gear.
Do not set the tooth contact as such bottom side toe contact.

Example of incorrect

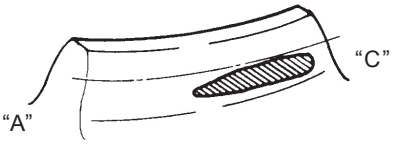

IEH511310098-01

"A": Heel	"C": Toe

Rechecking gear backlash
After obtaining optimum tooth contact, gear backlash should be measured.

1) Assemble special tool as shown in figure.

Special tool
TOOL (A): 09900–20602 (Dial gauge)
TOOL (B): 09900–20701 (Magnetic stand)
TOOL (C): 09952–09310 (Backlash indicator tool)

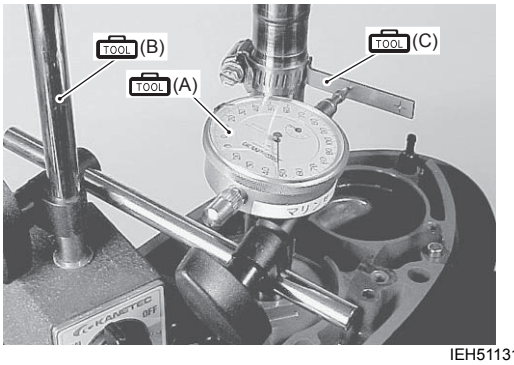

IEH511310099-02

2) Push the forward gear inward and fix it by hand, then read backlash on dial graduation by lightly moving driveshaft clockwise and counterclockwise by hand. Designate this amount of gear backlash as "A".

NOTE

Gear backlash "A" must be known to adjust reverse gear shim.

Gear backlash "A"
Approx. 0.3 – 0.5 mm (0.012 – 0.020 in)

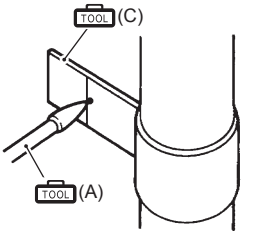

IEH511310100-01

Reverse Gear Back-Up Shim Adjustment
After adjusting the forward gear tooth contact pattern, follow the procedure below to adjust the reverse gear.

1) Correctly assemble and install reverse gear, propeller shaft, propeller shaft bearing housing and related components.
2) Screw a slide hammer assembly onto the propeller shaft and strike it a few gentle outward taps.

Special tool
TOOL (A): 09930–30104 (Sliding hammer)
TOOL (B): 09930–30161 (Propeller shaft remover)

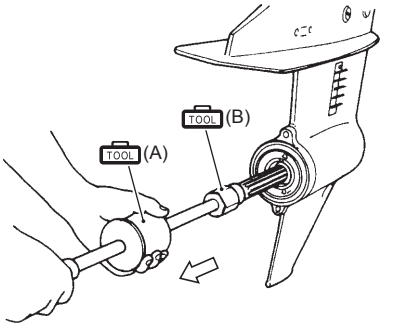

IEH511310101-01

3) Remove two bearing housing retaining bolts, then screw long bolts of special tool to secure the bearing housing.

Special tool
TOOL (C): 09951–99310 (Gear holder)

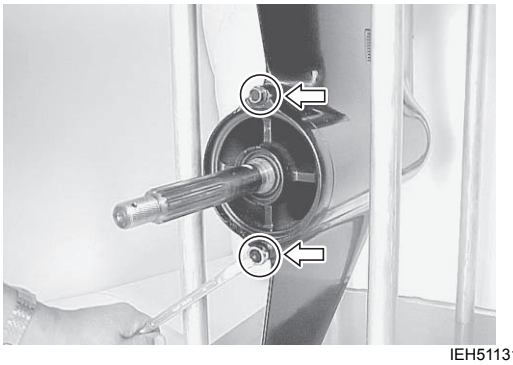

IEH511310102-01

4) Install the special tool and then attach it to the propeller shaft as shown.
5) Turning bolt (1) counterclockwise to pull reverse gear outward, tighten lightly the bolt after having stopped. Do not over tighten.

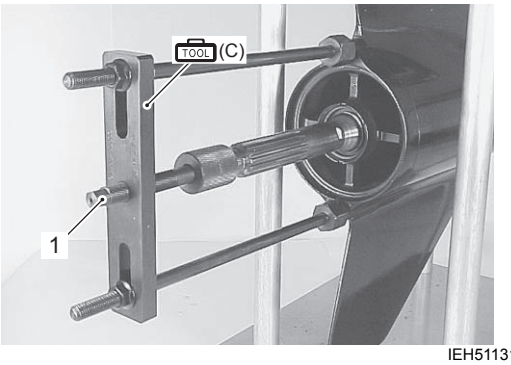

IEH511310103-01

6) Assemble backlash indicator tool and dial gauge as shown in figure.

Special tool
TOOL (D): 09900–20602 (Dial gauge)
TOOL (E): 09900–20701 (Magnetic stand)
TOOL (F): 09952–09310 (Backlash indicator tool)

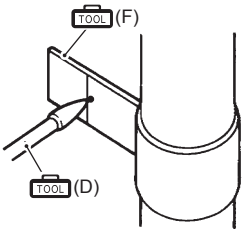

IEH511310104-01

7) Read backlash on dial gauge by lightly moving driveshaft clockwise and counterclockwise by hand. Designate this measurement as backlash (B).
8) Compare backlash (B) to backlash (A).
Refer to “Rechecking gear backlash” (Page 3A-27).
9) Reverse gear back-up shim adjustment is correct if (B) is equal to (A).
   - If (B) is less than (A), reduce reverse gear back-up shim thickness.

Checking propeller shaft thrust play
After adjusting all gear positions, measure the propeller shaft thrust play. If not within the following specification, a shim adjustment is required.

Propeller shaft thrust play
Approx. 0.2 – 0.4 mm (0.008 – 0.0016 in.)

NOTE

Use only the propeller shaft reverse thrust washer to adjust thrust play.
The forward gear thrust washer must be maintained at standard thickness (9.5 mm).

Measurement step:

1) Assemble the gear adjusting gauge to the propeller shaft.

Special tool
TOOL (A): 09951–09530 (Gear adjusting gauge)

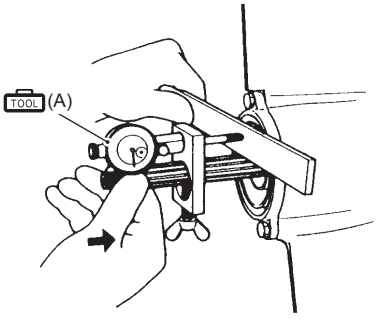

IEH511310105-01

2) Push propeller shaft inward.
3) Hold the shaft in and set the dial gauge pointer to zero.
4) Slowly pull the shaft outward and read the maximum thrust play on the dial gauge.
   - If the measurement is more than the specification, increase the propeller shaft reverse thrust washer thickness.
   - If the measurement is less than the specification, reduce the propeller shaft reverse thrust washer thickness.

Left Hand Rotation Unit

Diagnostic Information and Procedures

Diagnose Lower Unit Malfunction

CENFH5113204001

Trouble Check Chart

Condition	Possible cause	Correction / Reference Item
Engine stalls when engaging gear	Idling speed set too low.	*Adjustment.*
	Propeller shaft bearings damaged, lacking lubrication or seized.	*Replace.*
Engaging gear(s) has no effect on propulsion	Clutch out of adjustment.	*Adjustment.*
	Driveshaft broken or splines damaged.	*Replace.*
	Chipped or worn dog clutches.	*Replace.*
	Propeller not secured correctly (fallen off).	*Inspection or retighten.*
Loss of power (Assuming engine is OK)	Propeller bush slipping.	*Replace.*
	Bent or worn propeller.	*Repair or replace.*
Engine shakes the boat	Failed propeller bush.	*Replace.*
	Bent driveshaft or propeller shaft.	*Replace.*
	Damaged propeller.	*Replace.*
Clutch will not engage or disengage	Seized shift rod.	*Inspection.*
	Clutch shaft and clutch rod have become detached.	*Inspection.*
	Seized/broken remote control cable.	*Replace.*
	Problem at control box end.	*Inspection or replace.*

Service Instructions

Lower Unit Components

CENFH5113206001

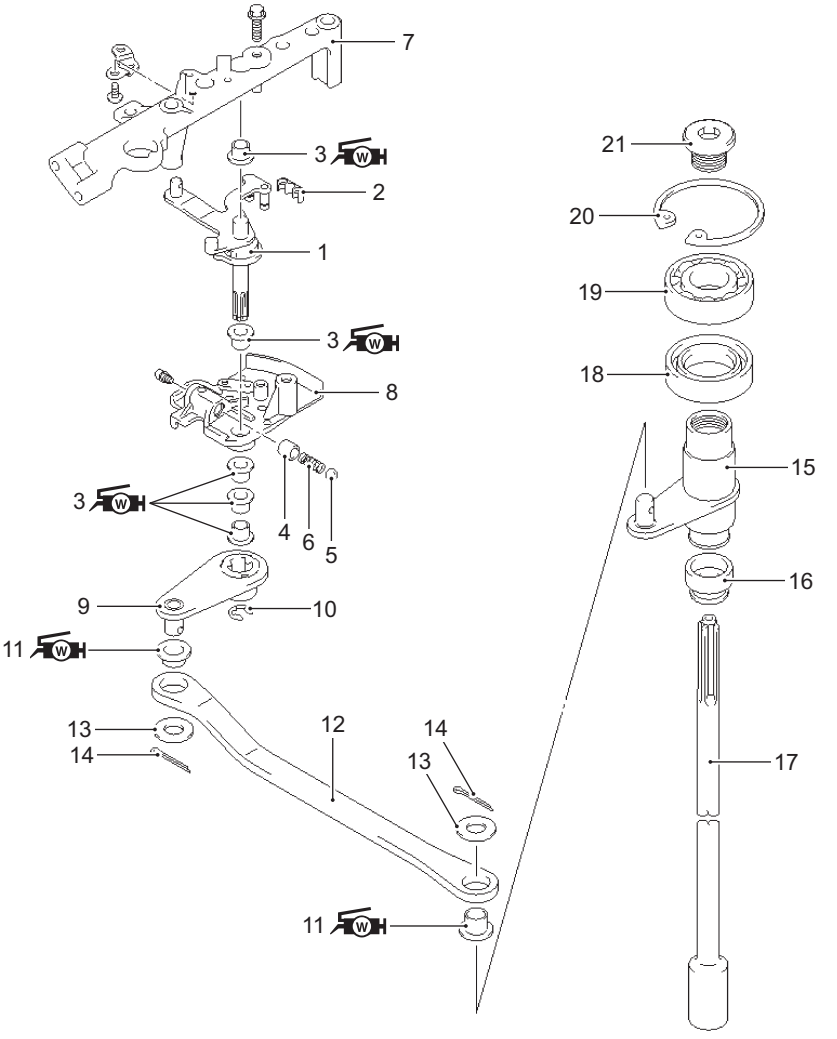

IFH511320001-02

1. Clutch lever	7. Throttle lever holder	13. Washer	19. Bearing
2. Clutch lever bushing	8. Clutch lever holder	14. Pin	20. Circlip
3. Bushing	9. Clutch shaft arm	15. Clutch shaft	21. Plug
4. Spring pin	10. E-ring	16. Clutch rod cover	: Apply SUZUKI Water Resistant Grease.
5. Ball	11. Bushing	17. Clutch rod	
6. Spring	12. Clutch lever link	18. Oil seal	

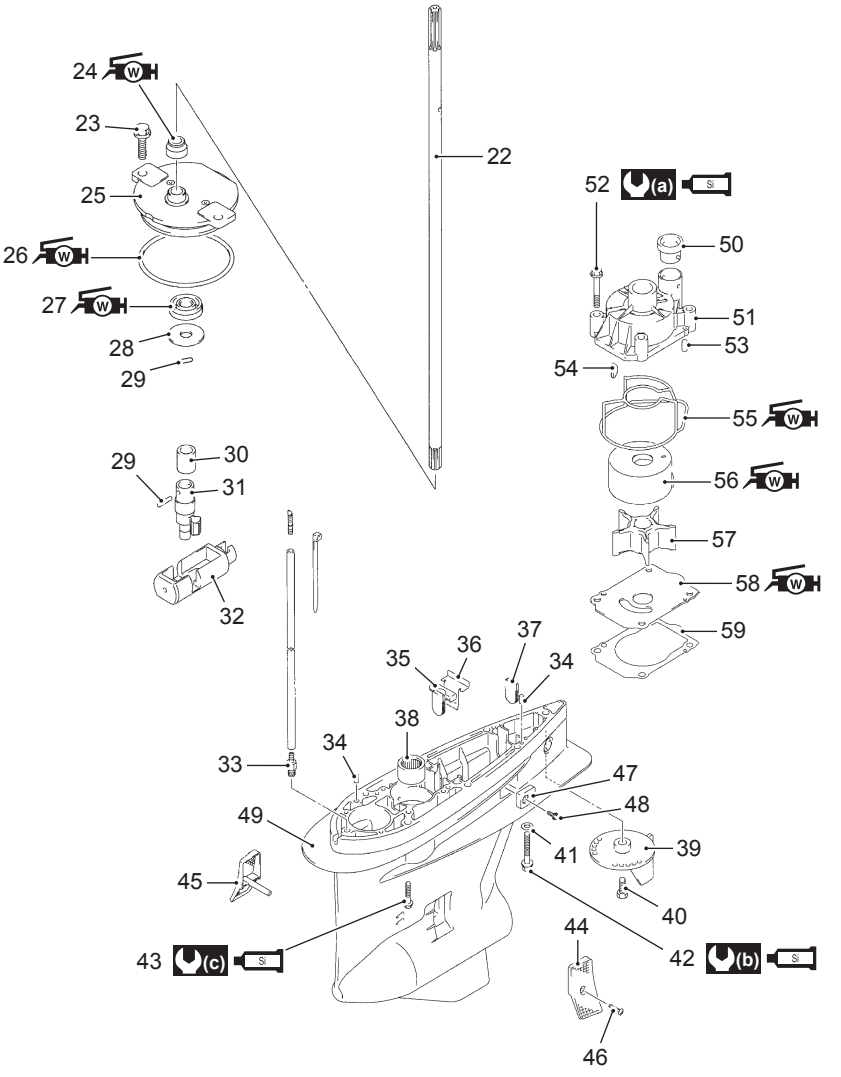

IEH511320101-01

22. Shift rod	33. Nipple	44. Water filter PORT	55. Sealing
23. Bolt	34. Dowel pin	45. Water filter STBD	56. Inner sleeve
24. Clutch rod cover	35. Exhaust seal rubber	46. Screw	57. Water pump impeller
25. Shift rod housing	36. Exhaust seal plate	47. Anode	58. Under panel
26. O-ring	37. Grommet	48. Bolt	59. Gasket
27. Oil seal	38. Pinion bearing	49. Gearcase	(a) : 17 N·m (1.7 kgf-m, 12.5 lbf-ft)
28. Washer	39. Trim tab	50. Bushing	(b) : 83 N·m (8.3 kgf-m, 60.0 lbf-ft)
29. Pin	40. Bolt	51. Water pump case	(c) : 55 N·m (5.5 kgf-m, 40.0 lbf-ft)
30. Magnet	41. Washer	52. Bolt	W : Apply SUZUKI Water Resistant Grease.
31. Shifter yoke	42. Bolt	53. Dowel pin	Si : Apply SUZUKI Silicone Seal.
32. Horizontal slider	43. Bolt	54. Key	

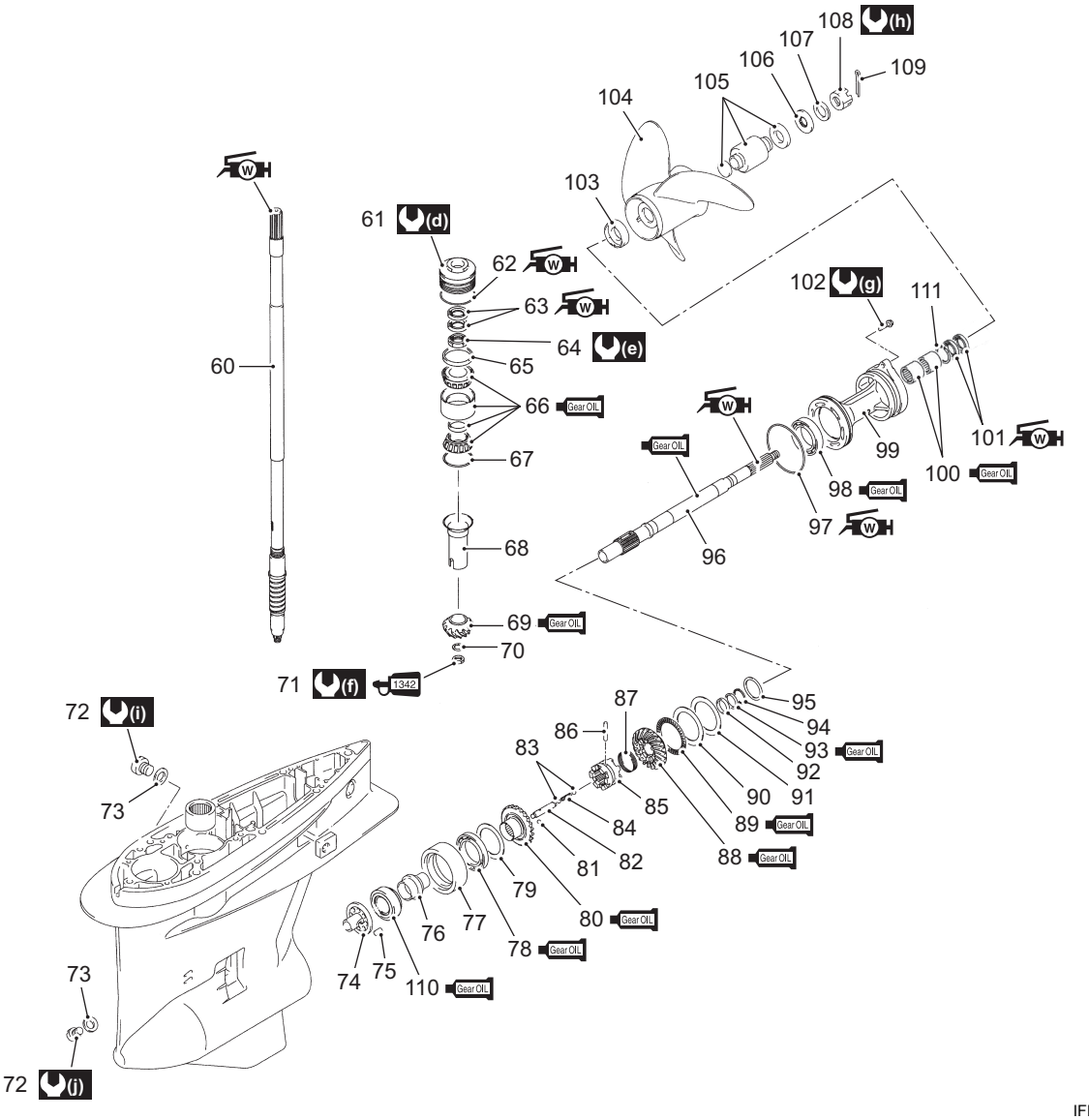

IFH511320002-03

60. Driveshaft	76. Thrust spacer	92. Washer	108. Nut
61. Oil seal housing	77. Reverse gear bearing housing	93. Bearing	109. Pin
62. O-ring	78. Bearing	94. Washer	110. Bearing
63. Oil seal	79. Shim	95. Shim	111. Circlip
64. Nut	80. Reverse gear	96. Propeller shaft	(d) : 100 N·m (10.0 kgf-m, 72.5 lbf-ft)
65. Spacer	81. Detent ball	97. O-ring	(e) : 100 N·m (10.0 kgf-m, 72.5 lbf-ft)
66. Driveshaft bearing	82. Connector pin	98. Bearing	(i) : 145 N·m (14.5 kgf-m, 105.0 lbf-ft)
67. Shim	83. Detent ball	99. Propeller shaft bearing housing	(g) : 23 N·m (2.3 kgf-m, 16.5 lbf-ft)
68. Driveshaft collar	84. Detent spring	100. Bearing	(h) : 55 N·m (5.5 kgf-m, 40.0 lbf-ft)
69. Pinion gear	85. Clutch dog shifter	101. Oil seal	(j) : 10 N·m (1.0 kgf-m, 7.0 lbf-ft)
70. Washer	86. Dog pin	102. Bolt	(j) : 10 N·m (1.0 kgf-m, 7.0 lbf-ft)
71. Pinion nut	87. Dog spring	103. Stopper	W : Apply SUZUKI Water Resistant Grease.
72. Plug	88. Forward gear	104. Propeller	Gear OIL : Apply SUZUKI Outboard Motor Gear Oil.
73. Gasket	89. Forward gear bearing	105. Propeller bushing set	1342 : Apply SUZUKI Thread Lock 1342.
74. Shift cam housing	90. Thrust washer	106. Spacer	
75. Pin	91. Shim	107. Washer	

Propeller Removal and Installation

CENFH5113206002

⚠ WARNING

Failure to take proper precautions when installing or removing the propeller can result in severe personal injury.

When installing or removing the propeller:

- **Shift into neutral and remove the emergency stop switch lock plate so that the motor cannot be started accidentally.**
- **Wear gloves to protect hands, and lock the propeller by placing a block of wood between the propeller blade tips and the anti-cavitation plate before attempting to remove or install propeller nut.**

Removal

1) Shift to neutral position.
2) Remove cotter pin (1) from propeller nut and remove propeller nut (2).
3) Remove washer (3), spacer (4), propeller (5) and stopper (6) from the propeller shaft.

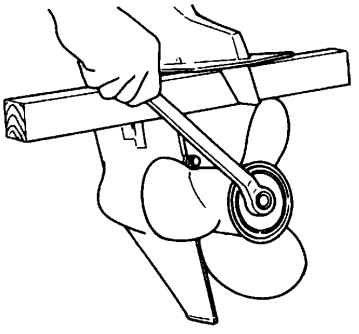

I9J011310001-01

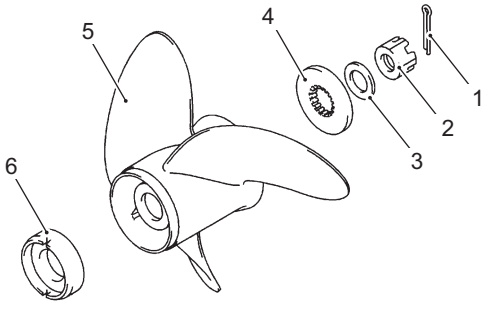

I9J011310002-02

Installation

1) Coat the propeller shaft splines liberally with Suzuki water resistant grease.

: Grease 99000–25350 (SUZUKI Water Resistant Grease EP2 (250 g))

2) Install propeller stopper (1) onto propeller shaft, then slide on the propeller (2).
3) Fit spacer (3), washer (4) and nut (5), then tighten nut to specified torque.
4) Push cotter pin (6) through nut and shaft, then bend to secure.

Tightening torque
Propeller nut (a): 55 N·m (5.5 kgf-m, 40.0 lbf-ft)

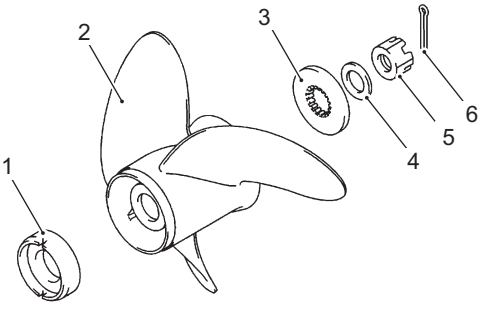

I9J011310017-01

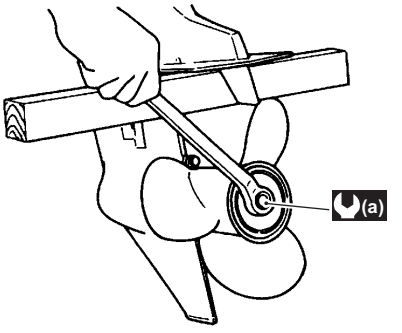

I9J011310003-04

Propeller / Propeller Nut / Cotter Pin Inspection

CENFH5113206003

Refer to “Propeller / Propeller Nut and Cotter Pin Inspection” in Section 0B (Page 0B-20).

Lower Unit Removal and Installation

CENFH5113206004

Removal

⚠ WARNING

Failure to take proper precautions when removing or installing the lower unit can result in severe personal injury.

Always disconnect the battery cable, before removing lower unit.

1) Remove STBD lower side cover.
   Refer to “Lower Side Cover Removal and Installation” in Section 2A (Page 2A-3).
2) Shift to neutral position. Remove bolt and trim tab (1).

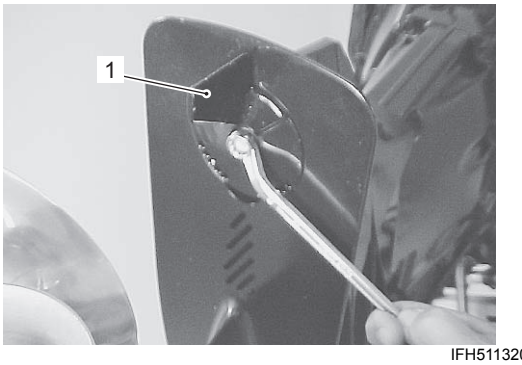

IFH511320003-01

3) Remove seven bolts (2) and separate gearcase (3) from driveshaft housing.

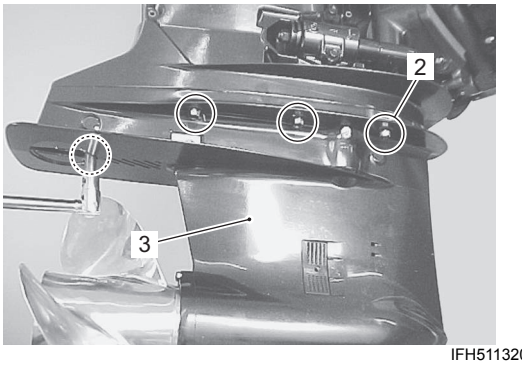

IFH511320004-01

4) Remove clutch rod (4) from clutch shaft (if necessary).

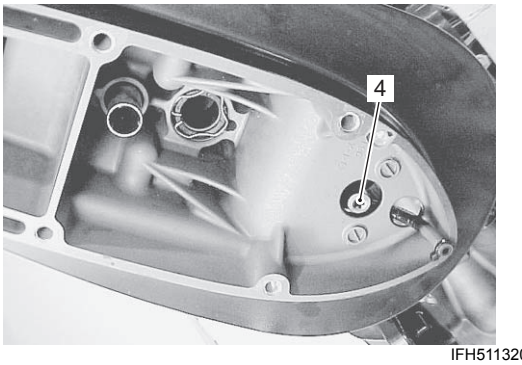

IFH511320005-01

Installation

1) Apply water resistant grease to clutch rod splines, then install clutch rod (1) by aligning clutch rod splines with splines in clutch shaft.

: Grease 99000–25350 (SUZUKI Water Resistant Grease EP2 (250 g))

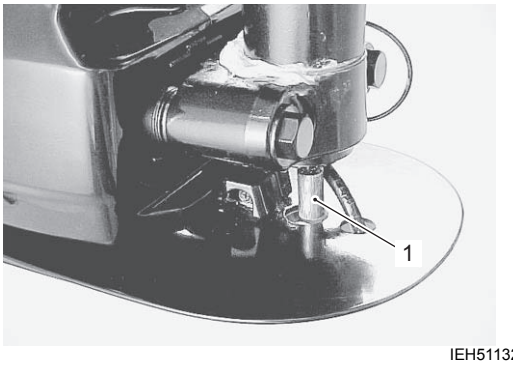

IEH511320007-01

2) Ensure that shift rod (2) is at neutral position.

NOTE

Before installing lower unit, bring shift to Neutral position by turning shift rod right or left.

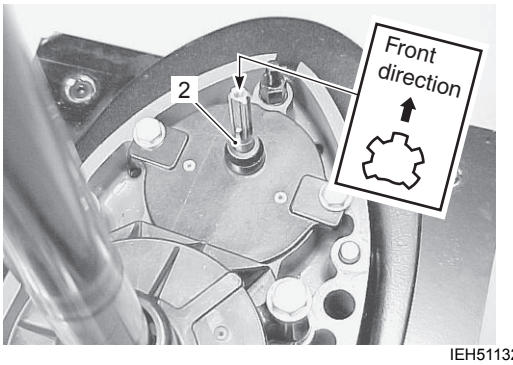

IEH511320008-01

3) Insert two dowel pins (3).
4) Apply water resistant grease to driveshaft and shift rod splines.
5) Apply a light coating of silicone seal to mating surfaces of gearcase and driveshaft housing.

: Sealant 93691–80030 (SUZUKI Silicone Seal (100 g))

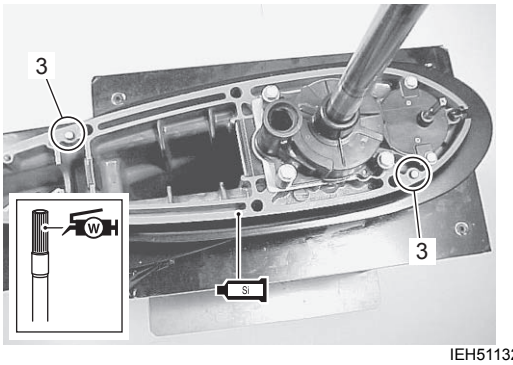

IEH511320009-01

6) Set the clutch control lever (4) at neutral position, then slide the lower unit (5) into place, ensuring that the top of driveshaft engages properly with driven gear shaft and that water tube locates in water pump case outlet.

NOTE

In order for shift rod and clutch rod splines to be aligned correctly, clutch rod may need to be turned slightly right or left.

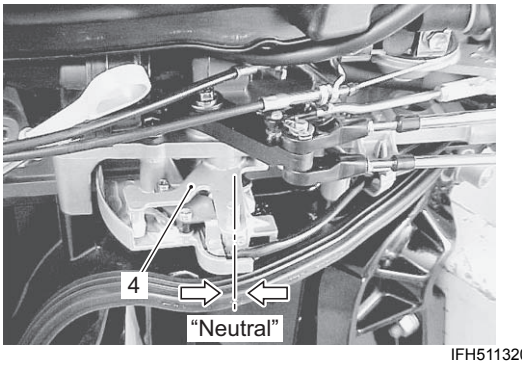

IFH511320006-01

7) Apply silicone seal to seven gearcase bolts (6) and tighten them to specified torque.

Si : Sealant 93691–80030 (SUZUKI Silicone Seal (100 g))

Tightening torque
Gearcase bolt (10 mm) (a): 55 N·m (5.5 kgf-m, 40.0 lbf-ft)
Gearcase bolt (12 mm) (b): 83 N·m (8.3 kgf-m, 60.0 lbf-ft)

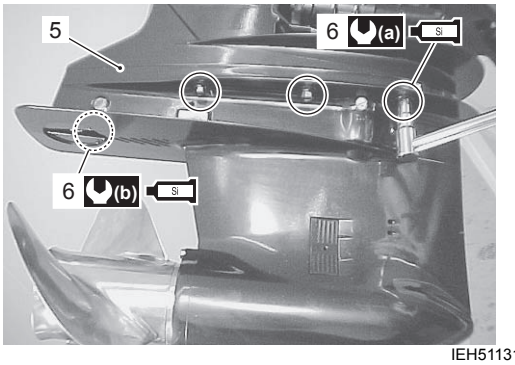

IEH511310011-04

8) Shift the clutch control lever to forward and reverse position from neutral position to check proper gear engagement.

9) Install the lower side cover.
Refer to "Lower Side Cover Removal and Installation" in Section 2A (Page 2A-3).

Water Pump Removal and Installation

CENFH5113206005

Removal

1) Remove the lower unit.
Refer to "Lower Unit Removal and Installation" (Page 3B-6).

2) Loosen four bolts (1), then remove water pump case (2).

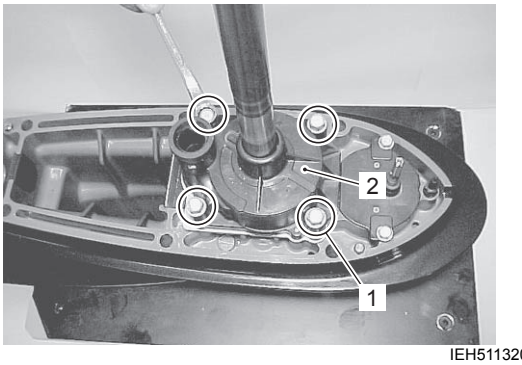

IEH511320012-01

3) Remove impeller (3), impeller key (4), pump under panel (5) and dowel pins (6).
Keep impeller key (4) for reuse and discard the plate gasket.

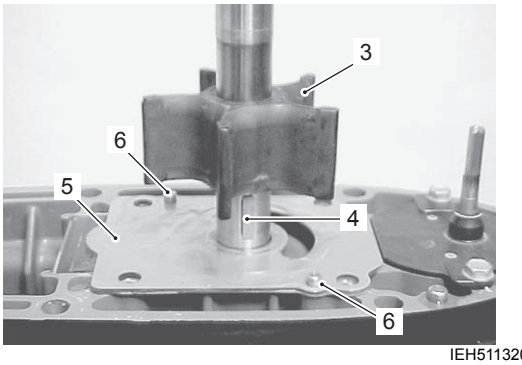

IEH511320013-01

4) Remove inner sleeve (7) and rubber sealing (8).

NOTE

To facilitate the removal of inner sleeve from the pump case, warm up the entire case using a heater like hair dryer.

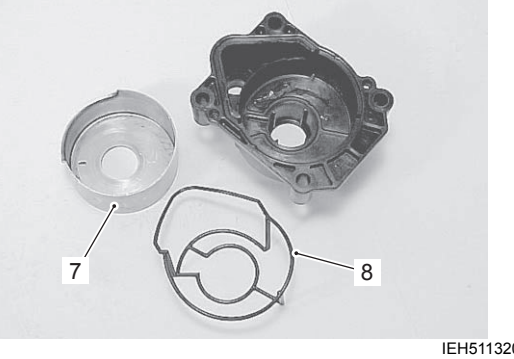

IEH511320014-01

Installation

1) Place the dowel pins (1), under panel gasket (2) and under panel (3) into position.
2) Insert the key (4) in the driveshaft and slide the impeller (5) onto driveshaft, ensuring that key and keyway are aligned.

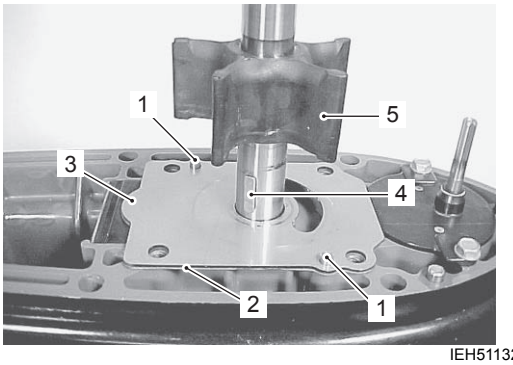

IEH511320015-01

3) Place the sealing (7) into groove of the pump case (6).

NOTE

Do not reuse sealing once removed. Always use new sealing.

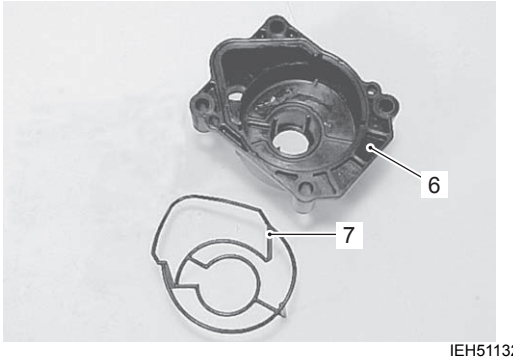

IEH511320016-01

4) Install inner sleeve (8) into the pump case, ensuring that projection of inner sleeve and groove of pump case are aligned.

NOTE

Before installing pump inner sleeve, apply water resistant grease lightly between inner sleeve and pump case mating surfaces.

: Grease 99000–25350 (SUZUKI Water Resistant Grease EP2 (250 g))

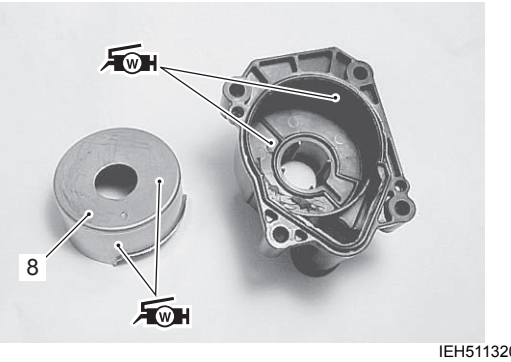

IEH511320017-02

NOTE

Before installing water pump case assembly, apply water resistant grease lightly on pump case inner sleeve and under panel for initial lubrication.

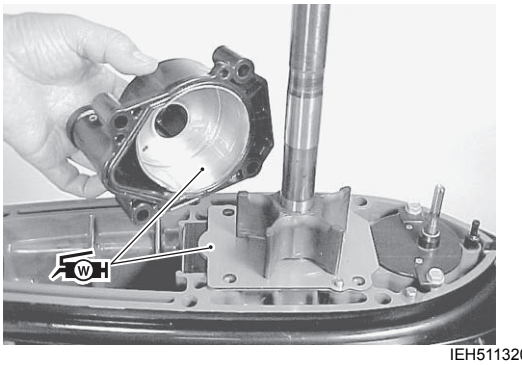

IEH511320018-01

5) Install the pump case assembly (9) while rotating driveshaft clockwise to flex the impeller vanes in the correct direction.
Securely tighten the four pump case bolts (10) to the specified torque.

Tightening torque
Water pump case bolt (a): 17 N·m (1.7 kgf-m, 12.5 lbf-ft)

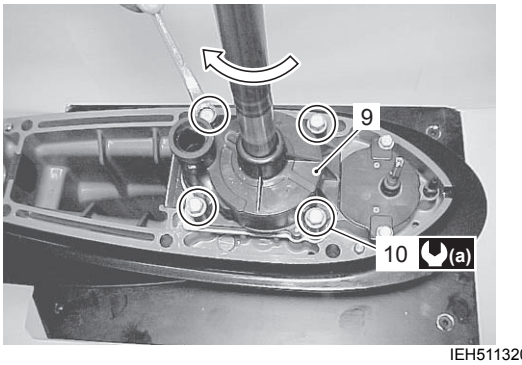

IEH511320019-01

6) Install the Lower Unit.
Refer to “Lower Unit Removal and Installation” (Page 3B-6).

Water Pump and Related Item Inspection

CENFH5113206006

Inspect the following parts.

- Inspect impeller. Replace if vanes are cut, torn, worn or other abnormal conditions.
- Inspect pump case. Replace if cracked, distorted or other abnormal conditions are noted.
- Inspect pump inner sleeve. Replace if worn, cracked, distorted, corroded or other abnormal conditions are noted.
- Inspect under panel. Replace if cracked, distorted, corroded or other abnormal conditions are noted.

NOTE

Do not reuse sealing once removed.
Always use new sealing.

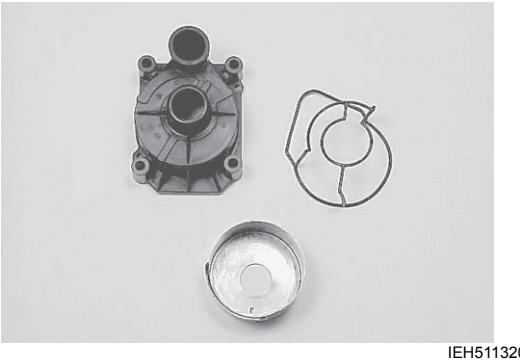

IEH511320020-01

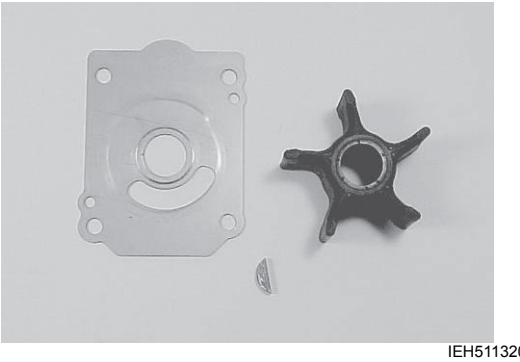

IEH511320021-01

Lower Unit Disassembly

CENFH5113206007

1) Remove the lower unit.
   Refer to “Lower Unit Removal and Installation” (Page 3B-6).
2) Remove the propeller.
   Refer to “Propeller Removal and Installation” (Page 3B-5).
3) Remove the water pump and related parts.
   Refer to “Water Pump Removal and Installation” (Page 3B-7).
4) Place a drain pan under oil drain plug. Remove oil drain plug (1) first then air vent plug (2) and allow gear oil to drain.
   Inspect oil for water, contaminates or metal.

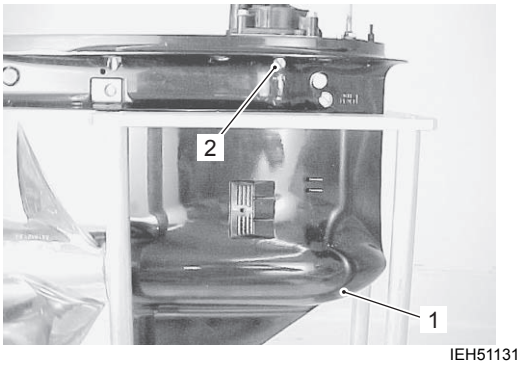

IEH511310108-02

5) Remove two bolts (3) and shift rod guide housing assembly (4).

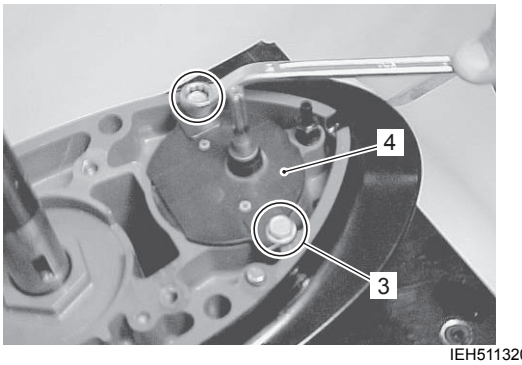

IEH511320023-03

6) Remove two bolts (5) securing the propeller shaft bearing housing to the gearcase.

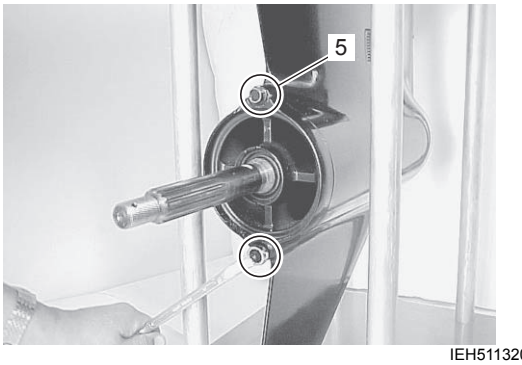

IEH511320024-03

7) Using special tools, pull out the propeller shaft bearing housing. Remove the propeller shaft and bearing housing assembly (6).

Special tool
TOOL (A): 09930–30104 (Sliding hammer)
TOOL (B): 09930–30161 (Propeller shaft remover)

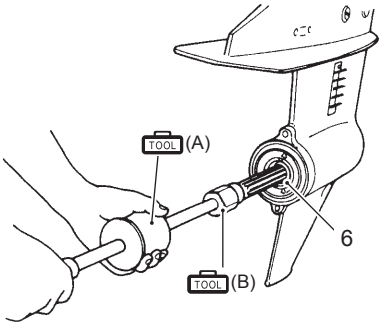

IEH511320099-02

8) Hold the pinion nut securely, then fit special tool to the driveshaft and loosen the pinion nut (7). Remove pinion nut (7) and washer (8).

Special tool
TOOL (C): 09921–29410 (Driveshaft holder)

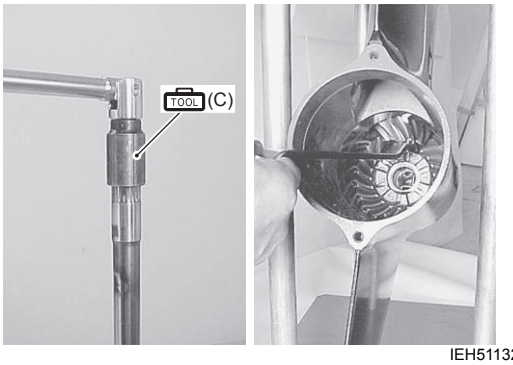

IEH511320025-01

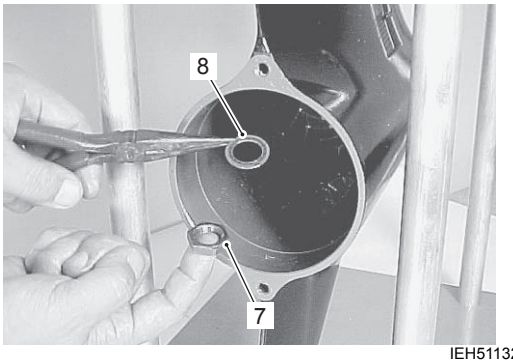

IEH511320026-03

9) Use special tool to unscrew driveshaft oil seal housing (9), then remove oil seal housing from driveshaft.

Special tool
TOOL (D): 09926–29310 (Driveshaft housing remover)

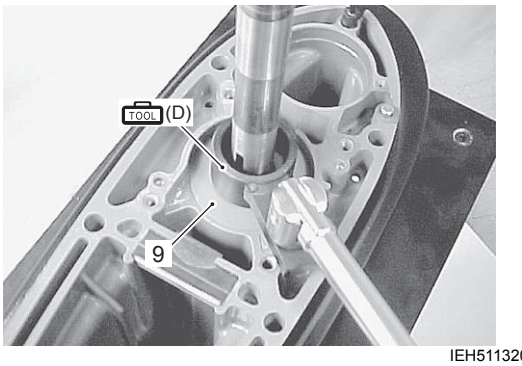

IEH511320027-03

10) Remove driveshaft bearing spacer (10).

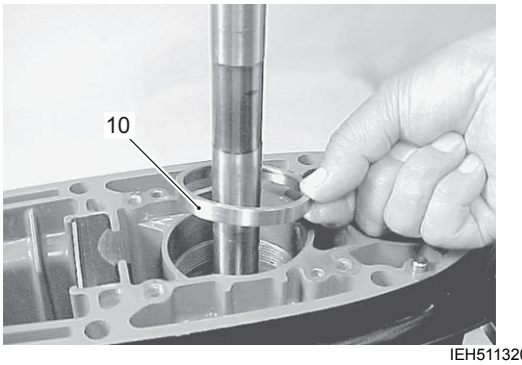

IEH511320028-03

11) Slowly lift out driveshaft assembly (11). Remove the pinion shim (12).

NOTE

The driveshaft pinion gear bearing contains 22 loose roller bearings. Account for all roller bearings on disassembly.

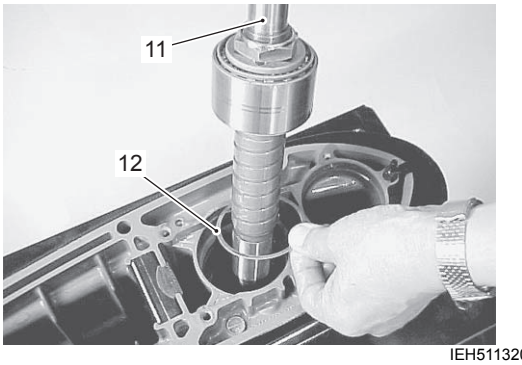

IEH511320029-03

12) Remove the driveshaft collar (13).

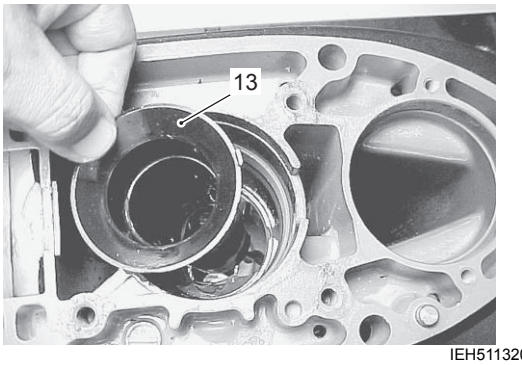

IEH511320030-03

13) Remove the pinion gear (14).
Remove the reverse gear (15) (with reverse gear bearing housing and thrust bearing).

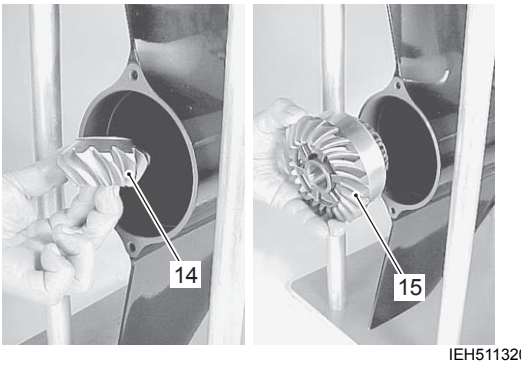

IEH511320031-03

14) Remove the thrust bearing (16), reverse gear bearing housing (17) and back-up shim (18) from reverse gear.

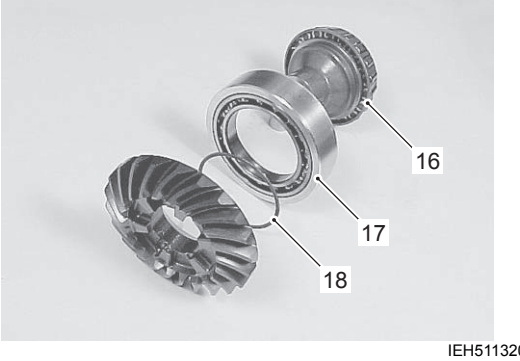

IEH511320032-03

15) To disassemble propeller shaft components, refer to following.

a) Slide propeller shaft (19) away from forward gear (21) and bearing housing assembly (20).

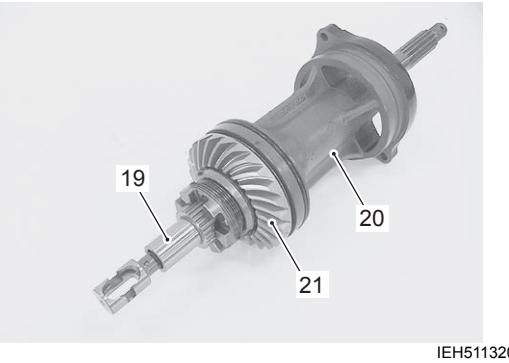

IEH511320033-03

b) Remove the forward gear (21), forward gear thrust bearing (22), forward gear thrust washer (23), forward gear back-up shim (24).

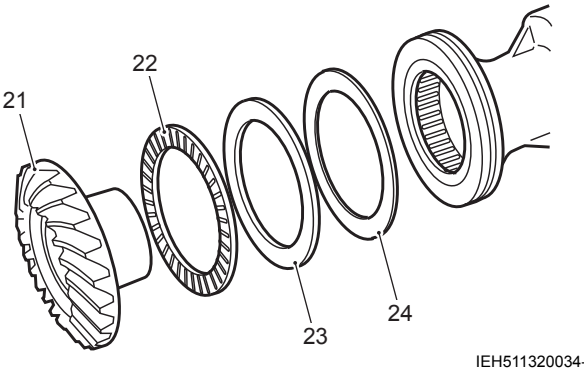

IEH511320034-03

c) Remove the propeller shaft thrust washer (25), propeller shaft thrust bearing (26), bearing washer (27) and shim (28) from propeller shaft bearing housing.

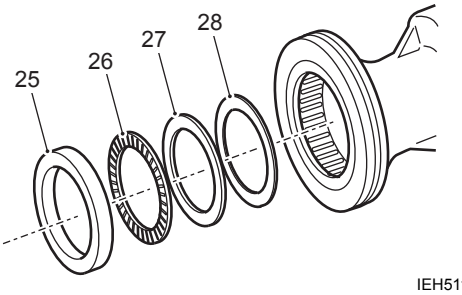

IEH511320035-03

d) Remove horizontal slider (29).
Remove the spring (30) from the clutch dog shifter (31).

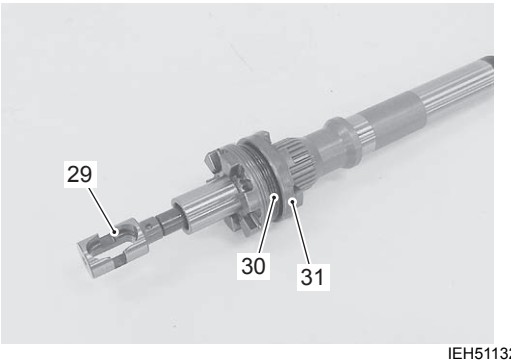

IEH511320036-03

e) Use special tool to push the dog pin (32) out of the clutch dog shifter (31).

Special tool
(E): 09922–89810 (Shift lock pin remover)

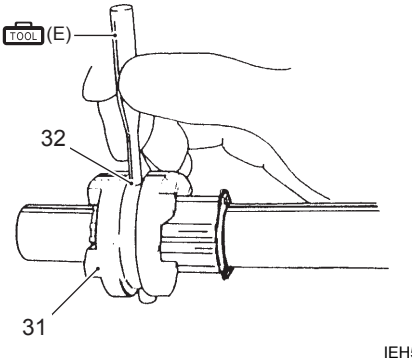

IEH511320037-03

f) Remove the clutch dog shifter (31) and connector pin (33) from propeller shaft.

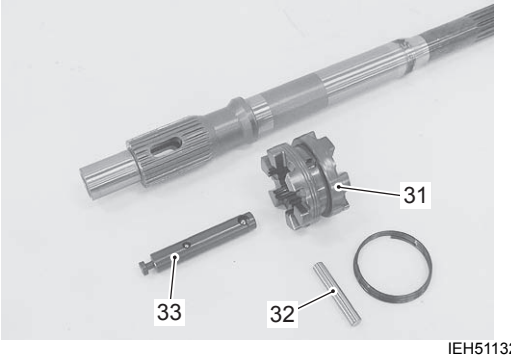

IEH511320038-03

g) Remove large detent ball (34), detent spring (35), large detent ball (36) and two small detent balls (37) from connector pin (33).

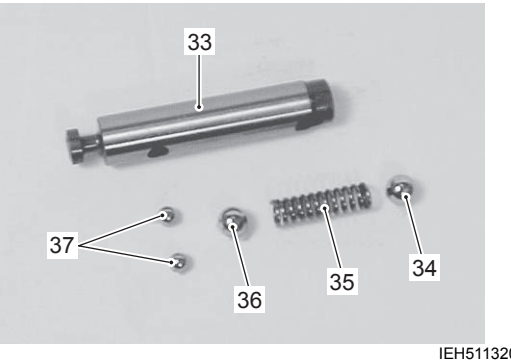

IEH511320039-03

16) To disassemble shift rod components, refer to following.
   a) Remove dust seal (38).
   b) Slide shift rod (39) out of shift rod guide housing (40).
   c) Draw the oil seal (41) out of shift rod guide housing (40).

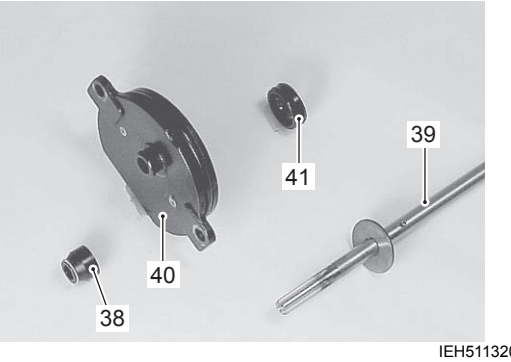

IEH511320040-03

   d) Separate the shifter yoke (42) from shift rod (39) by driving out the pin (43).

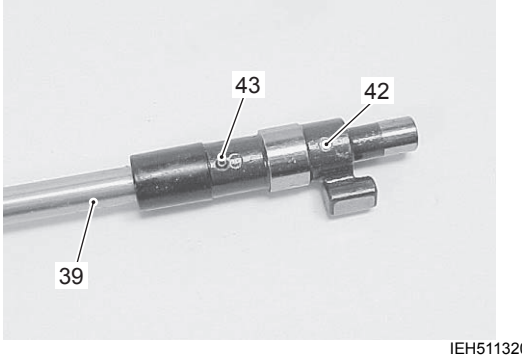

IEH511320041-03

Lower Unit Related Item Inspection

CENFH5113206008

⚠ WARNING

Failure to following proper precautions during use of the compressed air may cause severe personal injury.

Wear safety glasses when using compressed air.

NOTE

- **If any component is worn excessively, cracked, defective or damaged in any way, it must be replaced.**
- **Thoroughly wash all metal components with cleaning solvent and dry with compressed air.**

Gearcase

- Inspect the gearcase. Replace if cracked, damaged or other abnormal conditions are noted.
- Visually check the pinion bearing. Replace gearcase if pitted, rough or other abnormal conditions are noted.
- Visually check shift cam housing.
  Replace gearcase if cracked, damaged or other abnormal conditions are noted.



IEH511320042-01



IEH511320100-01

Gears / Bearing

- Inspect forward, reverse and pinion gear teeth and engaging dogs.
  Replace gears if damaged, worn or other abnormal conditions are noted.
- Inspect forward gear thrust bearing.
  Replace bearing if pitted, noisy, rough or other abnormal conditions are noted.

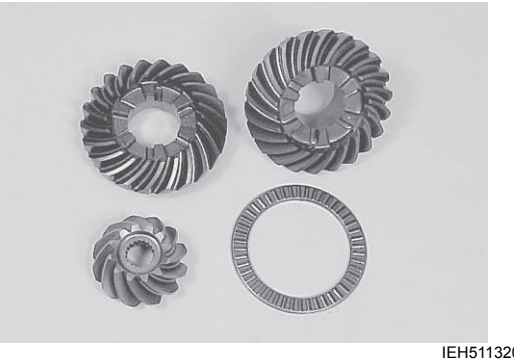

IEH511320043-01

Reverse Gear Bearing Housing / Bearing

- Inspect the reverse gear bearing housing.
  Replace if cracked, damaged or other abnormal condition are noted.
- Visually check bearing. Replace if pitted, noisy, rough or other abnormal condition are noted.



IEH511320044-01

Propeller Shaft Components

- Inspect horizontal slider and connector pin. Replace if worn, damaged or other abnormal conditions are noted.
- Inspect detent balls. Replace if wear, damage or other abnormal conditions are noted.
- Inspect clutch dog shifter. Replace if chipped, worn, damaged or other abnormal conditions are noted.
- Inspect dog pin. Replace if bent, worn or other abnormal conditions are noted.
- Inspect propeller shaft/splines. Replace if worn, twisted, damaged or other abnormal conditions are noted.

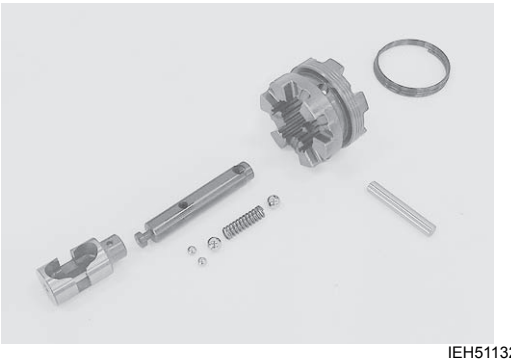

IEH511320045-01



IEH511320046-01

- Check detent spring by measuring its free length. If free length is not within specifications, replace detent spring.

Detent spring free length “a”
Standard: 27.8 mm (1.09 in.)
Service limit: 25.0 mm (0.98 in.)

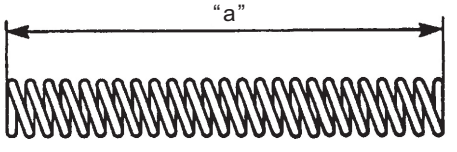

I9J011310062-01

Propeller Shaft Bearing Housing

- Inspect housing. Replace if cracked, damaged or other abnormal conditions are noted.
- Inspect forward gear bearing and propeller shaft bearing. Replace bearing if pitted, noisy, rough or other abnormal conditions are noted.
- Check condition of oil seal and O-ring. Replace oil seal and O-ring if nicked, cut, worn or other abnormal conditions are noted.



IEH511320047-01



IEH511320048-01

Shift Rod Guide Housing Components

- Inspect shift rod guide housing.
  Replace if cracked, damaged or other abnormal conditions are noted.
- Inspect shifter yoke. Replace if worn, damaged or other abnormal conditions are noted.
- Inspect shift rod/splines. Replace if worn, twisted, damaged or other abnormal conditions are noted.
- Inspect O-ring. Replace if nicked, cut, torn, swollen or other abnormal conditions are noted.
- Inspect oil seal and dust seal. Replace if nicked, cut, worn or other abnormal conditions are noted.

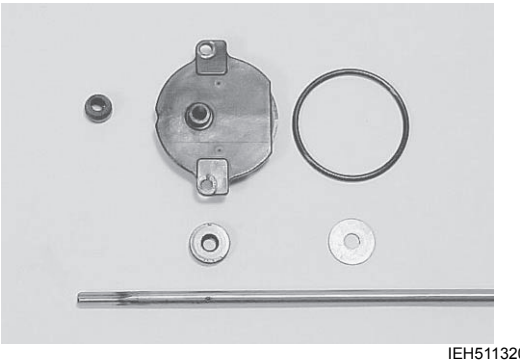

IEH511320049-01

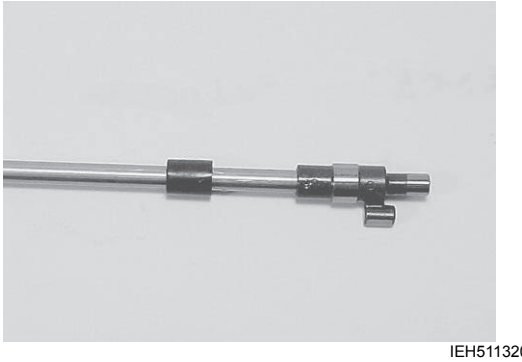

IEH511320050-01

Driveshaft Oil Seal Housing

- Inspect housing. Replace if cracked, damaged or other abnormal conditions are noted.
- Check condition of oil seals. Replace if nicked, cut, worn or other abnormal conditions are noted.
- Inspect O-ring. Replace if worn, nicked, cut or other abnormal conditions are noted.

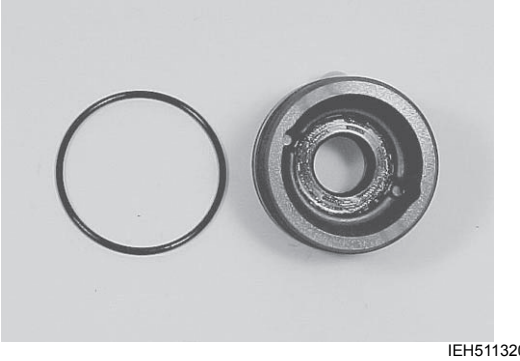

IEH511320051-01

Driveshaft

- Inspect driveshaft/splines. Replace if worn, twisted, damaged or other abnormal conditions are noted.
- Inspect driveshaft bearing, replace if pitted, noisy, rough or other abnormal conditions are noted.

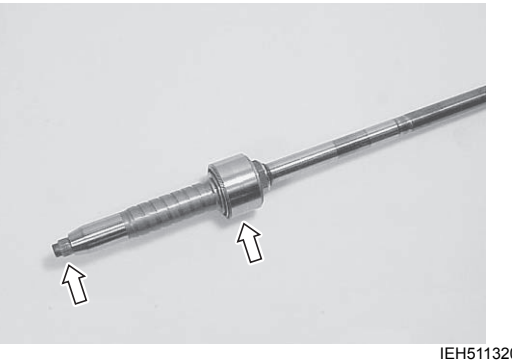

IEH511320052-01

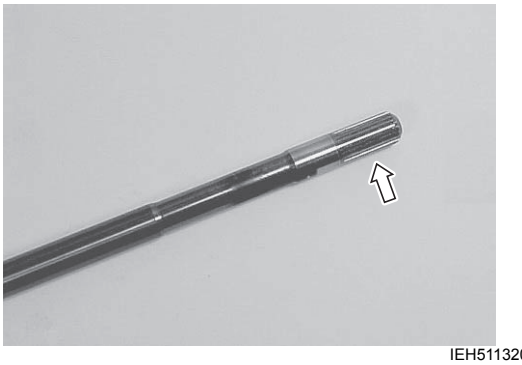

IEH511320053-01

Propeller Shaft Oil Seal Replacement

CENFH5113206009

1) Remove the propeller shaft bearing housing.
   Refer to “Lower Unit Disassembly” (Page 3B-9).



IFH511320007-01

2) Extract the seals (1) with oil seal remover.

NOTICE

Removing the oil seal can cause damage to the seal lips, causing oil to leak.

Do not reuse the oil seal once removed. Always use new one.

Special tool
(A): 09913–50121 (Oil seal remover)

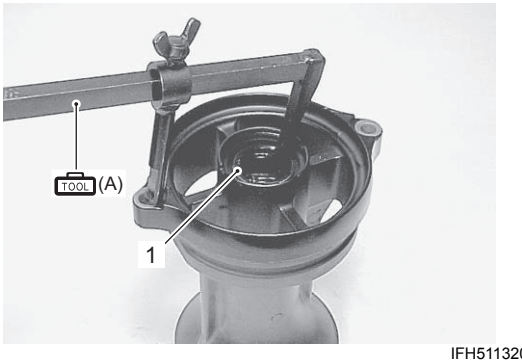

IFH511320008-01

3) Apply water resistant grease to the inner circumference of the housing.

: Grease 99000–25350 (SUZUKI Water Resistant Grease EP2 (250 g))

4) Using an oil seal installer, drive the two oil seals (one at a time) into the propeller shaft bearing housing. The lipped portion of the seal must face towards the propeller. Apply water resistant grease to the seal lips.

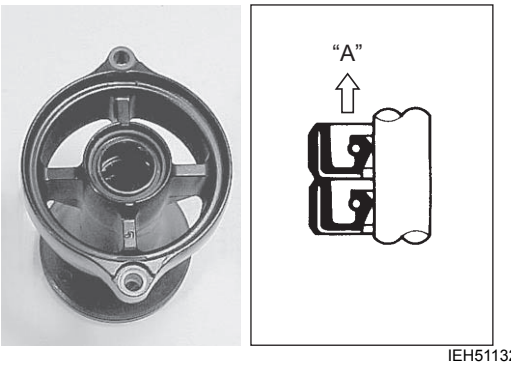

IEH511320056-01

"A": Direction of propeller

5) Assemble the propeller shaft bearing housing. Refer to "Lower Unit Assembly" (Page 3B-17).

Driveshaft Oil Seal Replacement

CENFH5113206010

1) Remove the driveshaft oil seal housing. Refer to "Lower Unit Disassembly" (Page 3B-9).

2) Using special tool, remove two oil seals out of the driveshaft oil seal housing.

Special tool
(A): 09913–50121 (Oil seal remover)

NOTICE

Removing the oil seal can cause damage to the seal lips, causing oil to leak.

Do not reuse the oil seal once removed. Always use new one.

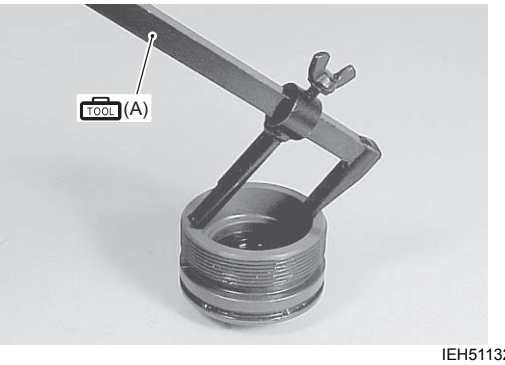

IEH511320057-01

3) Apply water resistant grease to inner circumference of driveshaft oil seal housing.

: Grease 99000–25350 (SUZUKI Water Resistant Grease EP2 (250 g))

4) Grease the inner lips of oil seal. With the lips facing away from driveshaft bearing, place seal in position and drive it into the oil seal housing.

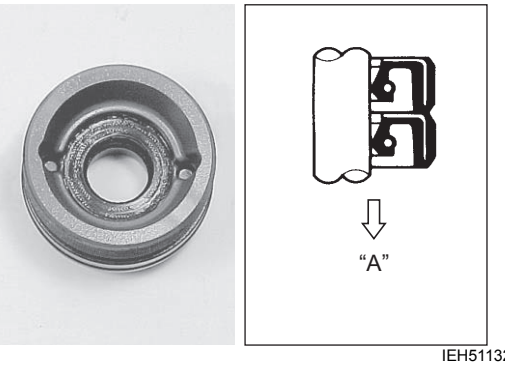

IEH511320058-01

"A": Direction of water pump case

5) Assemble the driveshaft oil seal housing. Refer to "Lower Unit Assembly" (Page 3B-17).

Lower Unit Assembly

CENFH5113206011

Assembly is in reverse order of disassembly with special attention to the following steps.

NOTICE

Failure to correctly adjust the gear position will result in lower unit damage.
Before final assembly of lower unit, be absolutely certain that all gear contact, shim adjustments and tolerances are correct.
(Refer to "Lower Unit Gears - Shimming and Adjustment" (Page 3B-24).)

NOTE

- **Make sure that all parts used in assembly are clean and lubricated.**
- **It is recommended that all seals, gaskets and O-rings be replaced with new on assembly.**
- **After assembly, check parts for tightness and smoothness of operation.**

Reverse Gear

- Assemble the reverse gear (1), back-up shim (2), reverse gear bearing housing (3) and reverse gear thrust bearing (4), then install reverse gear/bearing housing assembly.

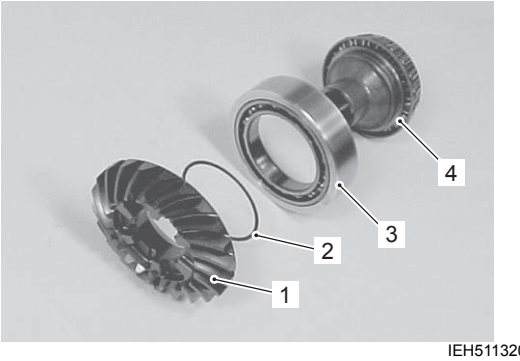

IEH511320059-01

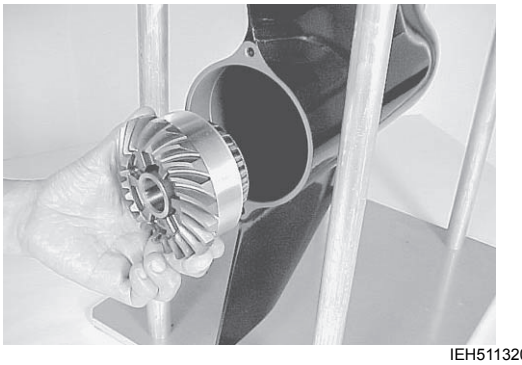

IEH511320060-01

Driveshaft Collar

- Install driveshaft collar (1).

NOTE

The tongue "A" of collar must be located into groove "B" on the gearcase.

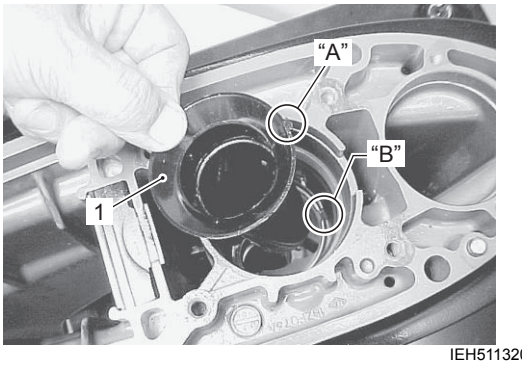

IEH511320061-01

Pinion Gear

- Place pinion gear (1) in gearcase.

NOTE

Before installing pinion gear, check for correct amount and position of pinion bearing rollers.
Use oil soluble grease to retain bearing rollers.

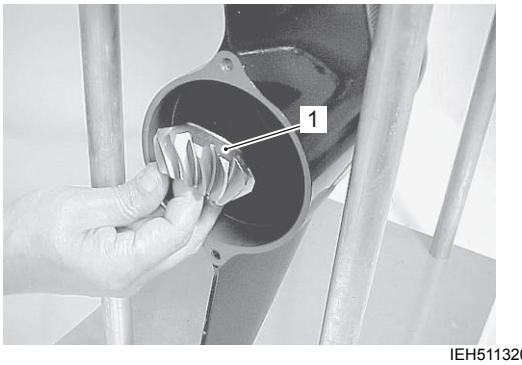

IEH511320062-01

Driveshaft

- Install pinion shim (1), then lower the driveshaft assembly (2) down into the gearcase until the bottom of shaft protrudes through center of pinion.

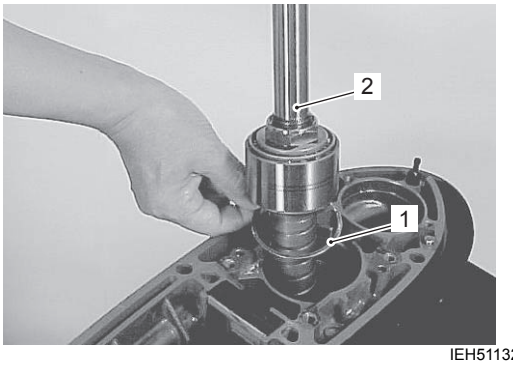

IEH511320063-01

Driveshaft Oil Seal Housing

- Apply water resistant grease to the driveshaft oil seal.
- Apply water resistant grease to O-ring (1), then install O-ring into groove on the driveshaft oil seal housing.

: Grease 99000–25350 (SUZUKI Water Resistant Grease EP2 (250 g))

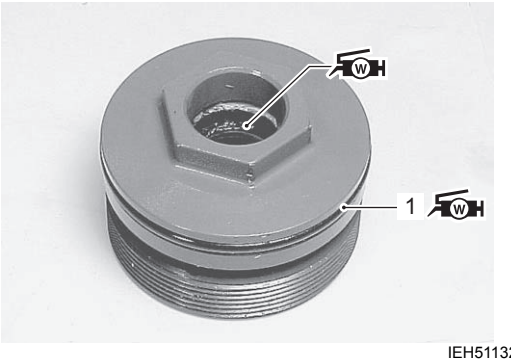

IEH511320064-01

- Install driveshaft bearing spacer (2).

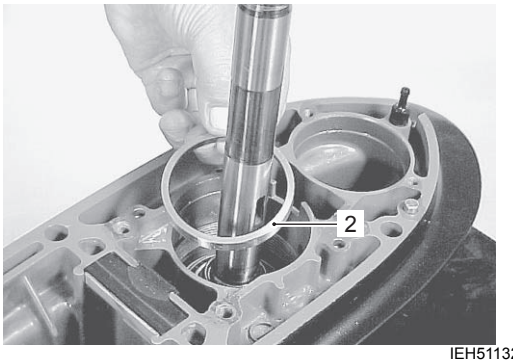

IEH511320065-01

- Install driveshaft oil seal housing on gearcase, then tighten oil seal housing to specified torque.

Special tool
TOOL (A): 09926–29310 (Driveshaft housing remover)

Tightening torque
Driveshaft oil seal housing (a): 100 N·m (10.0 kgf-m, 72.5 lbf-ft)

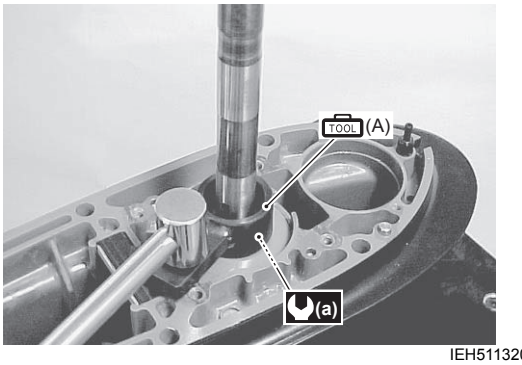

IEH511320066-01

Pinion Nut

- Apply thread lock 1342 to the threads of pinion nut (1) before threading it onto driveshaft.

1342 : Thread lock cement 99000–32050 (SUZUKI Thread Lock 1342 (50 g))

NOTE

It is recommended the original pinion nut be used for the purposes of shimming during repair. A new pinion nut should be used on final assembly.

- Install the washer (2) and tighten pinion nut (1) to specified torque.

Special tool
TOOL (A): 09921–29410 (Driveshaft holder)

Tightening torque
Pinion nut (a): 145 N·m (14.5 kgf-m, 105.0 lbf-ft)

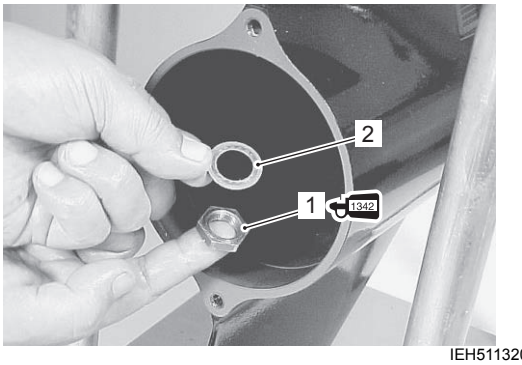

IEH511320067-01

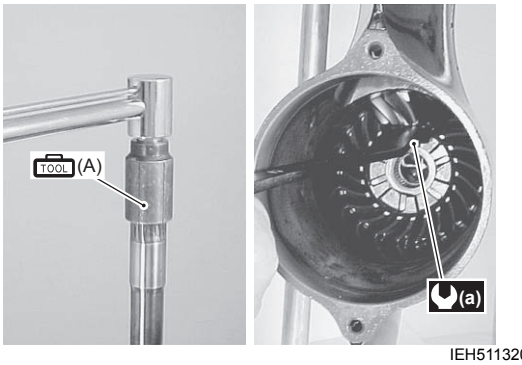

IEH511320068-01

Propeller Shaft

- Slide the clutch dog shifter (1) onto the propeller shaft (2).

NOTE

The marked side with identification grooves "A" of the clutch dog shifter must face towards reverse gear.

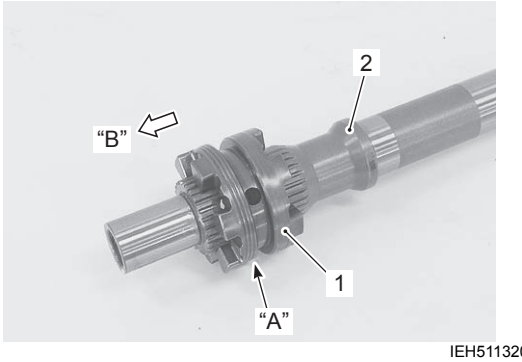

IEH511320069-03

"A": I.D. groove	"B": Reverse gear side

- Insert two small detent balls (3), large detent ball (4), detent spring (5) and large detent ball (6) into connector pin (7). Then depress detent ball (6) and temporarily insert stopper pin "C" into dog pin hole of connector pin, as shown in figure.

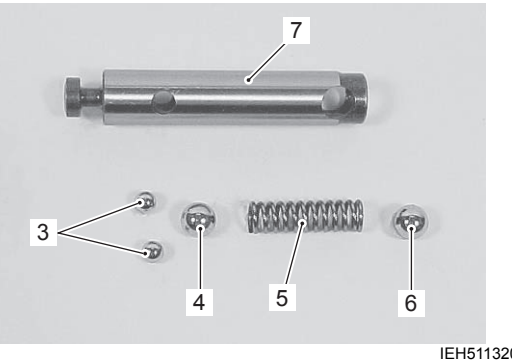

IEH511320070-01

NOTE

Temporarily insert a gearcase dowel pin "C" into the connector pin to prevent the detent ball from falling out.

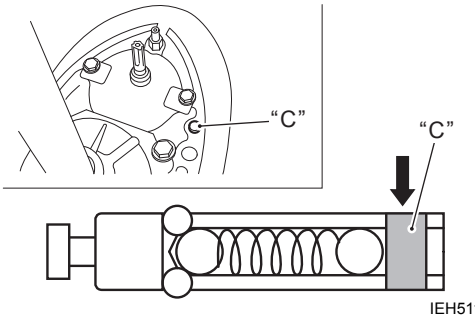

IEH511320071-02

- Insert the connector pin (7) (with detent balls) into propeller shaft (2).
- Align the holes in the clutch dog shifter and connector pin and then slide the dog pin (8) through both clutch dog shifter and connector pin. (save the temporarily installed dowel pin "C" pushed out as the dog pin is inserted.)
- Install the dog pin retaining spring (9), ensuring that it fits snugly into the groove on the dog shifter.

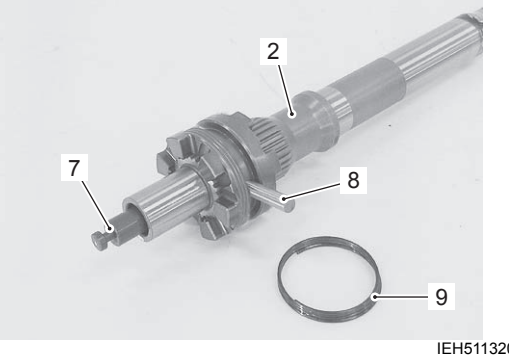

IEH511320072-03

Forward Gear / Propeller Shaft / Bearing Housing
Assemble the propeller shaft in the following sequence.

1. Apply water resistant grease to O-ring (1), then install the O-ring into the groove on the propeller shaft bearing housing.



IEH511320073-01

W : Grease 99000–25350 (SUZUKI Water Resistant Grease EP2 (250 g))
Gear Oil : Gear Oil 99000–22B22 (SUZUKI Outboard Motor Gear Oil)

2. Install shim (2), bearing washer (3), propeller shaft thrust bearing (4), propeller shaft thrust washer (5) into propeller shaft bearing housing (6).

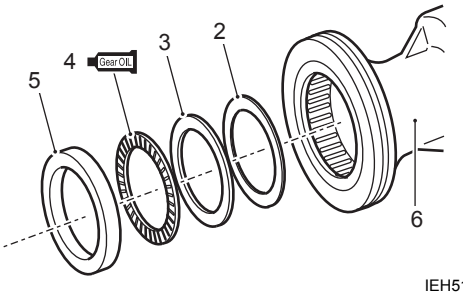

IEH511320074-01

3. Install forward gear back-up shim (7), forward gear thrust washer (8), forward gear thrust bearing (9) and forward gear (10) to propeller shaft bearing housing.

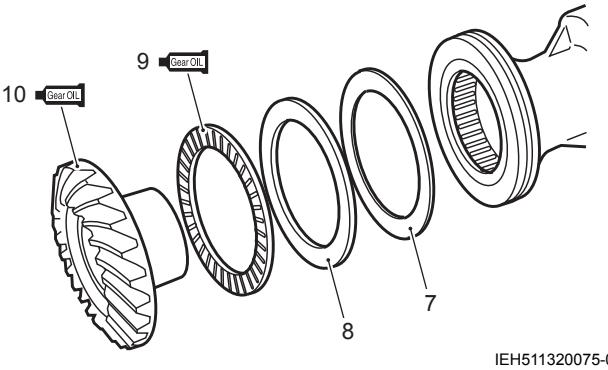

IEH511320075-01

4. Slide propeller shaft (11) into forward gear and propeller shaft bearing housing (6).
5. Assemble horizontal slider (12) to connector pin.

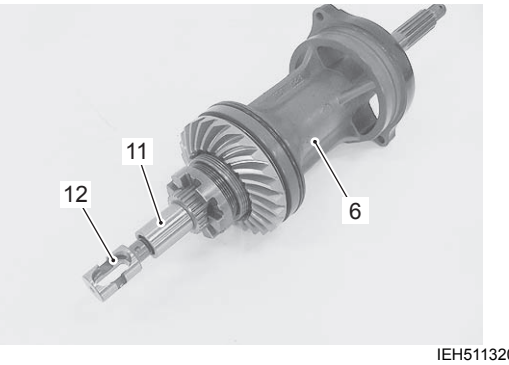

IEH511320076-01

NOTE

Before installing propeller shaft/bearing housing assembly, move shifter dog to bring horizontal slider to the neutral position.

6. To hold the correct bearing position, pull propeller shaft backward and then install propeller shaft and housing assembly in the gearcase with the mark “UP” of housing toward upside.

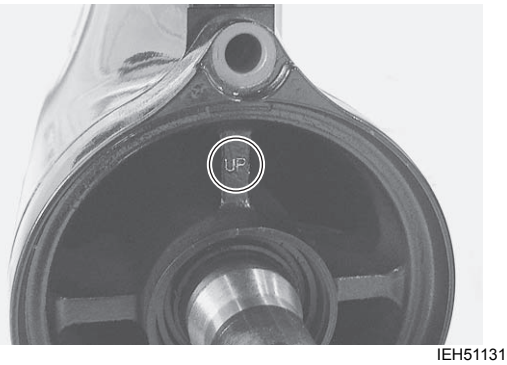

IEH511310109-02

NOTE

To make the bearing housing fully seated in the gearcase, tap the housing gently with plastic mallet.

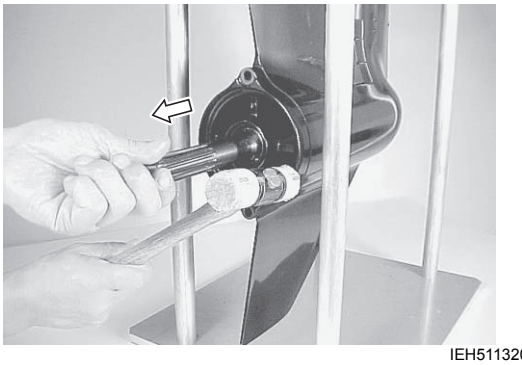

IEH511320077-01

7. When the housing is fully seated, tighten both retaining bolts to the specified torque.

   Tightening torque
   Bearing housing bolt (a): 23 N·m (2.3 kgf-m, 16.5 lbf-ft)

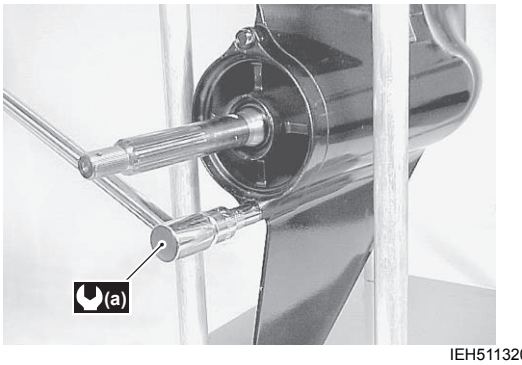

IEH511320078-01

Checking Propeller Shaft Thrust Play
Check propeller shaft thrust play.
Refer to “Lower Unit Gears - Shimming and Adjustment” (Page 3B-24).

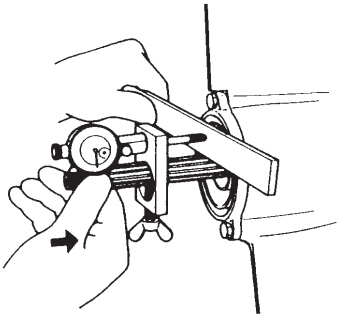

IEH511320079-01

Shift Rod Guide Housing

- Apply water resistant grease to oil seal (1).
  Using an oil seal installer, drive the oil seal (1) into the shift rod guide housing (2). The lipped portion of oil seal must face towards the driveshaft housing.

  : Grease 99000–25350 (SUZUKI Water Resistant Grease EP2 (250 g))

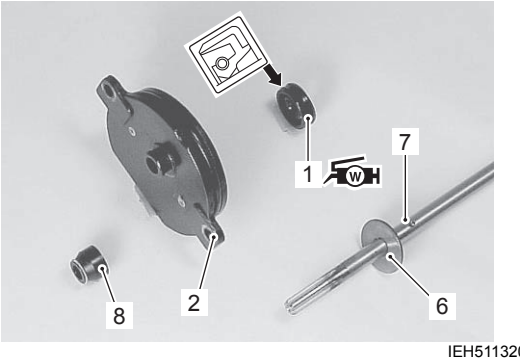

IEH511320080-01

- Attach shifter yoke (3) to shift rod (4), then insert pin (5).

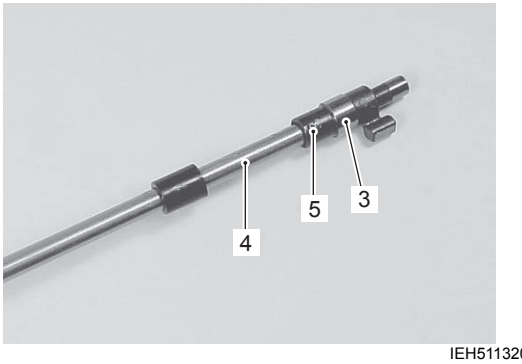

IEH511320081-01

- Install pin (7) and washer (6) to shift rod, then slide shift rod guide housing onto shift rod.
- Install dust seal (8) to shift rod guide housing.

NOTE

Be sure the horizontal slider (9) is in the neutral position before installing the shift unit (shift rod guide housing assembly).

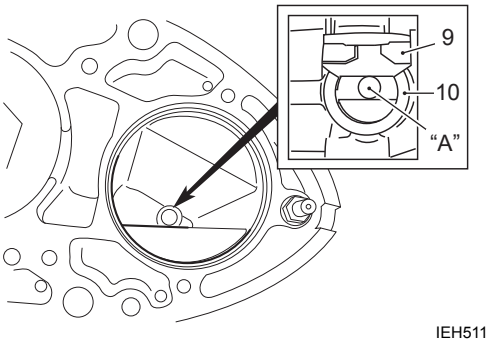

IEH511320082-01

9. Horizontal slider	“A”: Shift rod center
10. Shift cam housing	

- Apply water resistant grease to the shift rod guide housing O-ring.

  : Grease 99000–25350 (SUZUKI Water Resistant Grease EP2 (250 g))

  NOTE

  Before installing shift rod guide housing assembly, bring shifter yoke to Neutral position by turning shift rod right or left.

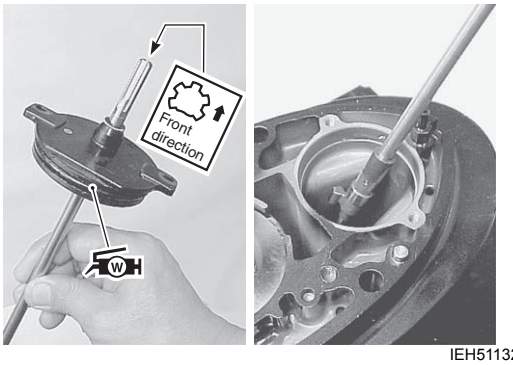

IEH511320083-01

- Install shift rod guide housing assembly by aligning shifter yoke (3) with groove in horizontal slider (9), then tighten two housing bolts (11) securely.

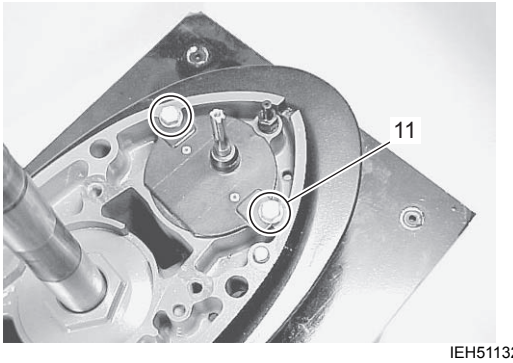

IEH511320084-02

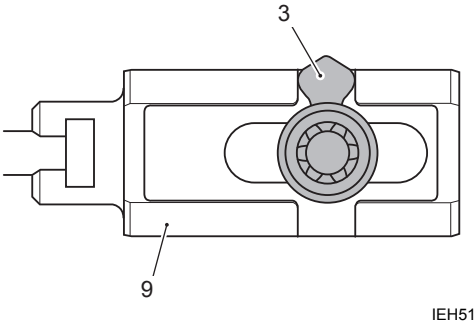

IEH511320085-01

- Turn shift rod from Neutral position to Forward and Reverse position to check proper gear engagement.

Leakage Check

Check for leakage of oil seal and O-ring when applying specified pressure inside of the gearcase.

1) Install the test tool into the oil drain hole.
2) Connect the air pump to the tester.
3) Rotate driveshaft and propeller shaft clockwise several times and then apply specified pressure for the test.

NOTICE

Failure to correctly apply the test pressure will result in oil seal damage.

Do not exceed pressure of 110 kPa (1.1 kg/cm², 15.6 psi.).

NOTE

Apply low initial pressure of 20 – 40 kPa (0.2 – 0.4 kg/cm², 2.8 – 5.7 psi.) first, then apply specified pressure.

Special tool

(A): 09950–69512 (Gearcase oil leakage tester)

(B): 09952–99320 (Hand air pump)

Leakage pressure test

100 kPa (1.0 kg/cm², 14.2 psi.)

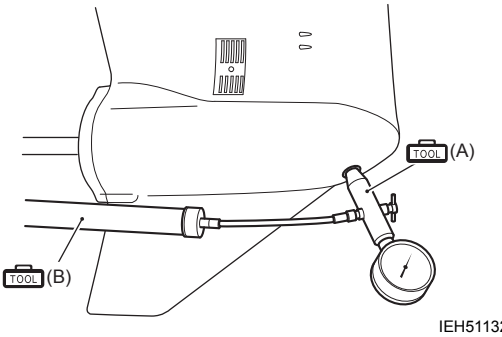

IEH511320086-01

4) Once stabilized, pressure should remain steady for at least 5 min.
   If pressure does not fall, sealing performance is correct.

Water Pump
Install the water pump and related parts.
Refer to “Lower Unit Removal and Installation” (Page 3B-6) and “Water Pump Removal and Installation” (Page 3B-7).

Propeller
Install the propeller.
Refer to “Propeller Removal and Installation” (Page 3B-5).

Lower Unit
Install the Lower Unit.
Refer to “Lower Unit Removal and Installation” (Page 3B-6).

Trim Tab Adjustment

CENFH5113206012

The trim tab counteracts or minimizes propeller torque pull felt through the steering system.
If the steering is pulls to the starboard or port side, adjust the trim tab with the following procedure.

1) Loosen the trim tab bolt (1).

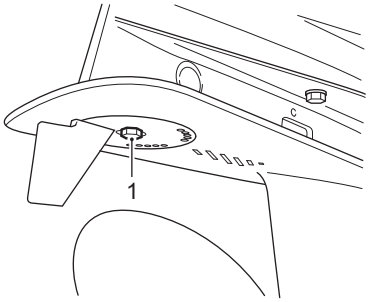

IEH511310087-01

2) Changing the trim tab setting.
   - To compensate for a veer to starboard, set the trailing edge of tab (2) to the right (as viewed from behind).
   - To compensate for a veer to port, set the trailing edge of tab (2) to the left.

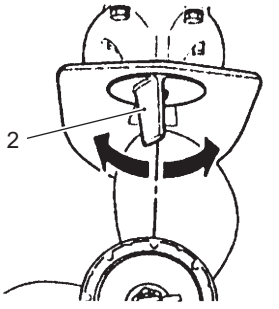

I9J011310010-03

3) Tighten the bolt of trim tab.
4) Test drive the boat and repeat the procedure 1) – 3) to set the trim tab in the best position.
   With a properly adjusted trim tab, steering should be neutral and there should be no tendency for the steering to be pulled to either port or starboard.

Lower Unit Gears - Shimming and Adjustment

CENFH5113206013

If the lower unit has been rebuilt or has had components replaced, shimming for the correct gear contact and backlash will have to be checked and/or adjusted to ensure smooth, reliable operation.

Shim/Washer and mounting position

Item	Available thickness (mm)	Design specification thickness (mm)
Pinion gear back up shim	**0.45, 0.50, 0.55, 0.60, 0.65, 0.70, 0.75, 0.80, 0.85, 0.90**	**1.0**
Forward gear back up shim	**0.50, 0.55, 0.60, 0.65, 0.70, 0.75, 0.80, 0.85, 0.90, 0.95, 1.00**	**1.0**
Propeller shaft thrust shim	**0.60, 0.70, 0.80, 0.90, 0.95, 1.00, 1.05, 1.10, 1.15**	**1.0**
Reverse gear back up shim	**0.45, 0.50, 0.55, 0.60, 0.65, 0.70, 0.75, 0.80, 0.85, 0.90**	**1.0**

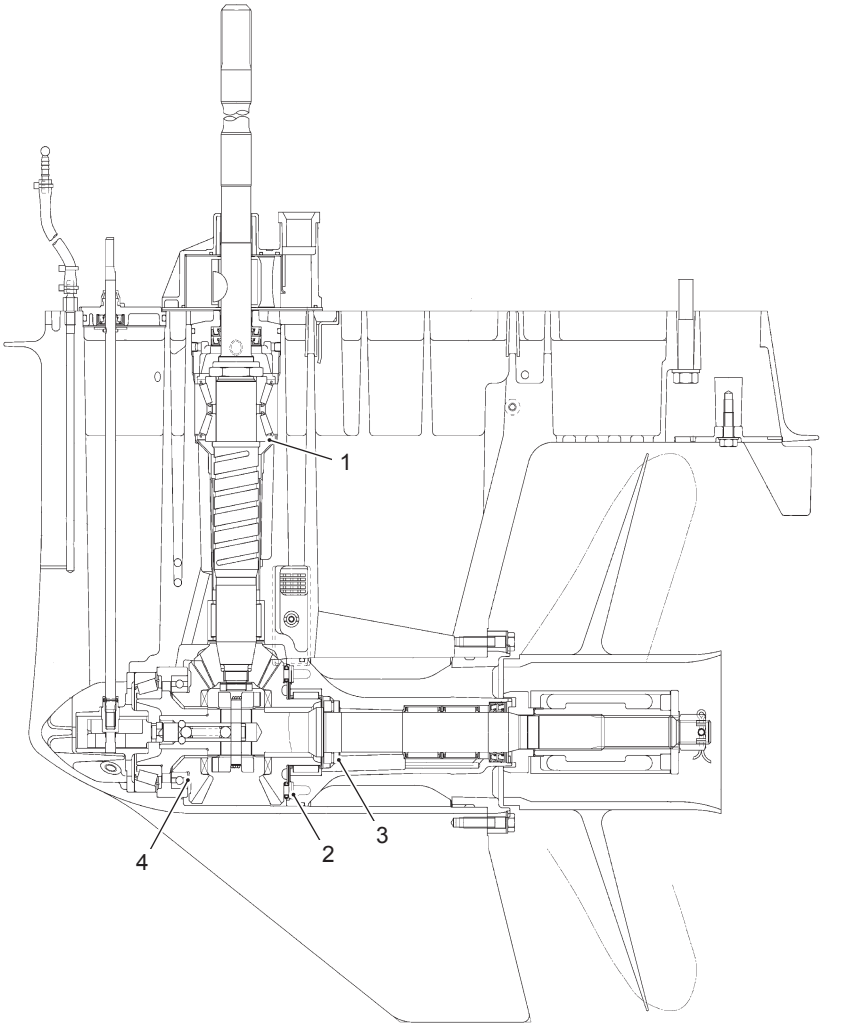

IEH511320088-04

1. Pinion gear back-up shim	3. Propeller shaft thrust shim
2. Forward gear back-up shim	4. Reverse gear back-up shim

Reverse Gear / Pinion Gear Back-Up Shim Adjustment

Follow the procedure below to adjust reverse gear/pinion gear.

Prior to adjustment

1) Install standard pinion gear back-up shim thickness modified according to ± design specification mark on the gear.

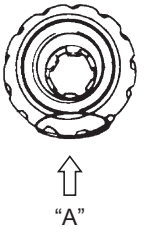

IDG211320108-01

"A": ± design spec. mark

2) Correctly assemble driveshaft oil seal housing, driveshaft, reverse gear, pinion gear and related components.
Refer to "Lower Unit Assembly" (Page 3B-17).
Do not install forward gear at this time.

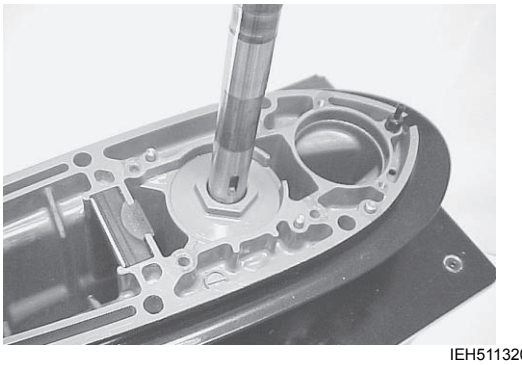

IEH511320089-01

3) Tighten pinion nut to specified torque.

Tightening torque
Pinion nut: 145 N·m (14.5 kgf-m, 105.0 lbf-ft)

Adjusting gear backlash

1) Assemble special tools to driveshaft as shown in figure.

Special tool
(A): 09900–20602 (Dial gauge)
(B): 09900–20701 (Magnetic stand)
(C): 09952–09310 (Backlash indicator tool)

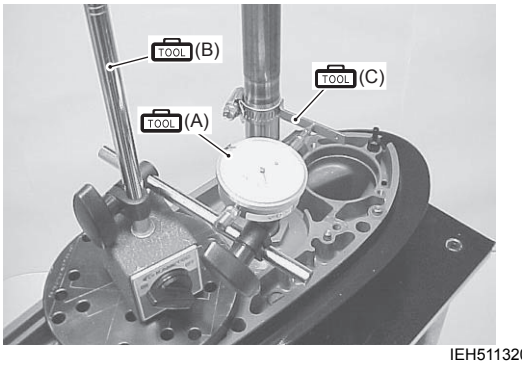

IEH511320090-01

2) Push reverse gear inward and hold it by hand, align dial gauge pointer at 90° to the mark on the backlash indicator tool and read backlash on dial gauge by lightly moving driveshaft clockwise and counterclockwise by hand.

Gear backlash
Approx. 0.6 – 0.8 mm (0.024 – 0.031 in.)

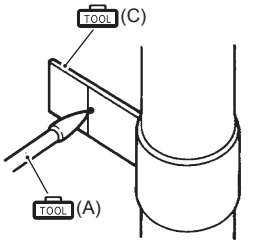

IDG211320097-03

- If the backlash measured is larger than the specification, add the amount over the specification to the temporary use reverse gear back-up shim and install this shim.
- If the backlash measured is smaller than the specification, subtract the amount less than the specification from the temporary use reverse gear back-up shim and install this shim.

Forward Gear Shim
After adjusting reverse gear backlash, follow the procedure below to adjust forward gear.

Adjusting gear backlash

1) Correctly assemble driveshaft oil seal housing, driveshaft, reverse gear, pinion gear and related components.
   Refer to “Lower Unit Assembly” (Page 3B-17).
2) Tighten pinion nut to specified torque.

   Tightening torque
   Pinion nut: 145 N·m (14.5 kgf-m, 105.0 lbf-ft)

3) Correctly assemble forward gear, forward gear bearing, propeller shaft, propeller shaft thrust bearing, propeller shaft bearing housing and related components.
   When assemble the forward gear and propeller shaft housing assembly, place the special tool between clutch dog shifter and forward gear as shown in the figure.

NOTE

- **Before installing special tool, move shifter dog to reverse position.**
- **Use longer spring (free length: 42.3 mm, 1.67 in) in the gear adjust spring set to adjust the forward gear backlash.**

Special tool
TOOL (A): 09951–09310 (Gear adjust spring set)

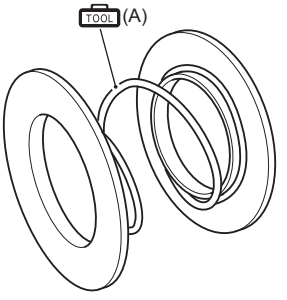

IEH511320091-01

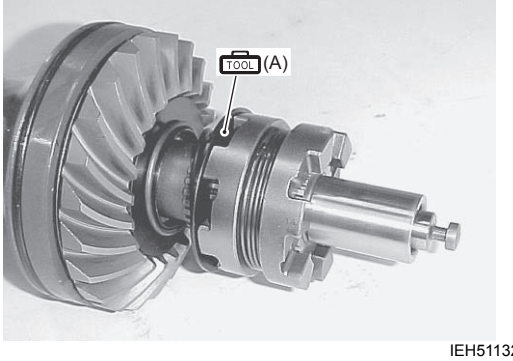

IEH511320092-03

4) Install forward gear and propeller shaft housing assembly into gearcase, then tighten both bearing housing retaining bolts to specified torque.



IEH511320093-01

5) Assemble special tool to driveshaft as shown in figure.

Special tool
TOOL (B): 09900–20602 (Dial gauge)
TOOL (C): 09900–20701 (Magnetic stand)
TOOL (D): 09952–09310 (Backlash indicator tool)

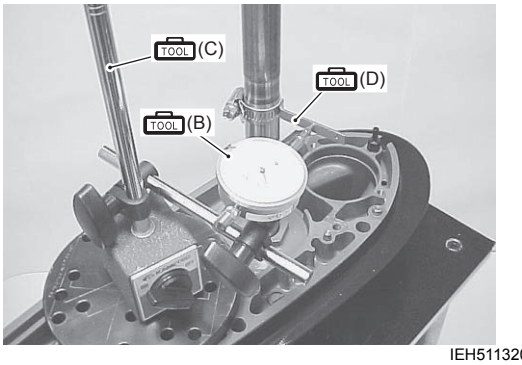

IEH511320094-01

6) Align dial gauge pointer at 90° to the mark on the backlash indicator tool and read backlash on dial gauge by lightly moving driveshaft clockwise and counterclockwise by hand.

Gear backlash
Approx. 0.3 – 0.5 mm (0.012 – 0.020 in)

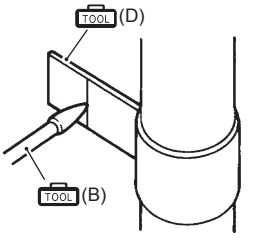

IEH511320095-01

- If the backlash measured is larger than the specification, add the amount over the specification to the temporary use forward gear back-up shim and install this shim.
- If the backlash measured is smaller than the specification, subtract the amount less than the specification from the temporary use forward gear back-up shim and install this shim.

Checking and adjusting tooth contact pattern (Pinion gear and forward gear)
Check tooth contact pattern using the following procedure:

1) To assess tooth contact, apply a light coat of Prussian Blue on the convex surface of forward gear.

NOTE

- **Use shorter spring (free length: 23.8 mm, 0.94 in) in the gear adjust spring set and install it between forward gear and clutch dog to check the tooth contact pattern.**
- **Before installing special tool, move shifter dog to reverse position.**

Special tool
TOOL (A): 09951–09310 (Gear adjust spring set)

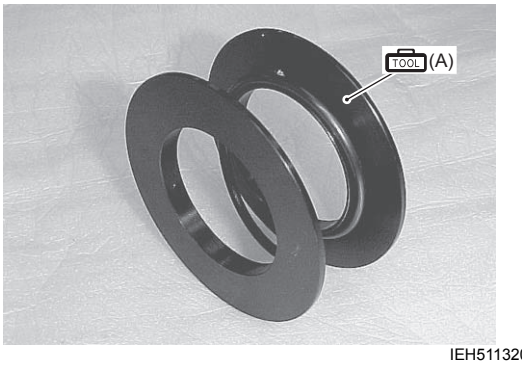

IEH511320097-02

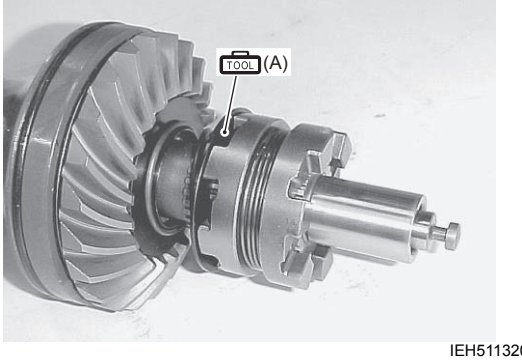

IEH511320092-03

2) Install forward gear and propeller shaft housing assembly into gearcase, then tighten both bearing housing retaining bolts to specified torque.



IEH511320096-01

3) Using the driveshaft holder tool, rotate the driveshaft 5 – 6 times.

Special tool
TOOL (B): 09921–29410 (Driveshaft holder)



IEH511320098-01

4) Carefully pull out the propeller shaft and housing to check the tooth contact pattern.

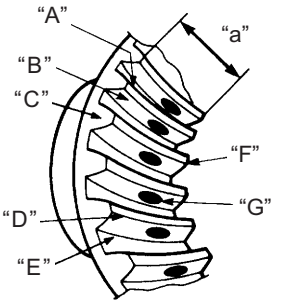

I9J011310013-02

"A": Concave side	"E": Tooth bottom
"B": Convex side	"F": Toe
"C": Heel	"G": Tooth contact pattern
"D": Tooth top	"a": Tooth width

Optimum tooth contact
The optimum tooth contact is shown in the figure. A shim adjustment may be necessary to obtain this contact pattern.

NOTE

Gear backlash should be checked when increasing or decreasing shim thickness to adjust tooth contact.

Optimum tooth contact

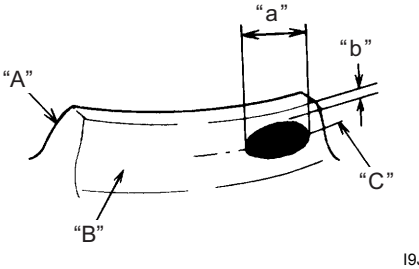

I9J011310014-02

"A": Heel	"a": Approx. 1/3 of tooth width
"B": Convex side	"b": Approx. 1 mm (0.04 in)
"C": Toe	

Example [A]
Incorrect topside toe contact.
Correction measures.

- Decrease thickness of forward gear shim.
- Slightly decrease pinion gear shim thickness.

NOTICE

Setting the tooth contact in the top side toe contact may cause damage and chipping on forward and pinion gears.
Do not set the tooth contact as such top side toe contact.

Example of incorrect

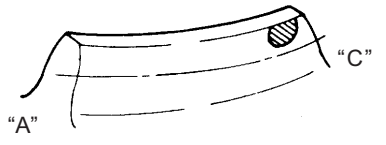

I9J011310015-01

Example [B]
Incorrect bottom side toe contact.
Correction measures.

- Increase thickness of forward gear shim.
- Slightly increase pinion gear shim thickness.

NOTICE

Setting the tooth contact in the bottom side toe contact may cause chipping on pinion gear.
Do not set the tooth contact as such bottom side toe contact.

Example of incorrect

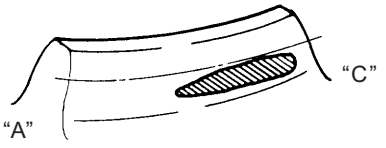

I9J011310016-01

Checking propeller shaft thrust play
After adjusting all gear positions, measure the propeller shaft thrust play. If not within the following specification, a shim adjustment is required.

NOTE

Use only the propeller shaft thrust shim to adjust thrust play.

Propeller shaft thrust play
Approx. 0.2 – 0.4 mm (0.01 – 0.02 in.)

1) Assemble the gear adjusting gauge to the propeller shaft.

Special tool
(A): 09951–09530 (Gear adjusting gauge)

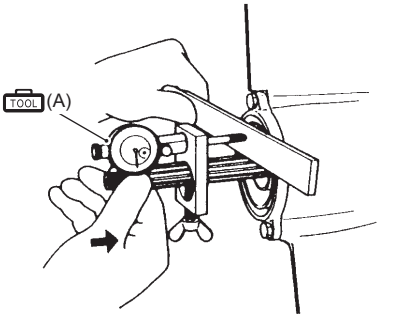

IDG211320105-01

2) Push propeller shaft inward.
3) Hold the shaft in and set the dial gauge pointer to zero.
4) Slowly pull the shaft outward and read the maximum thrust play on the dial gauge.
   - If the measurement is more than the specification, increase the propeller shaft thrust shim thickness.
   - If the measurement is less than the specification, reduce the propeller shaft thrust shim thickness.

Section 4

Wire / Hose Routing

CONTENTS

Precautions 4-1
Precautions 4-1
Precautions for Wire / Hose Routing 4-1
Component Location 4-1
Electrical Component Location 4-1

Wire Routing 4A-1
Schematic and Routing Diagram 4A-1
Wiring Diagram 4A-1
Wiring Harness Routing Diagram 4A-2

Fuel / Water Hose Routing 4B-1
Precautions 4B-1
Precautions for Fuel / Water Hose Routing 4B-1
Schematic and Routing Diagram 4B-1
Fuel Hose Routing 4B-1
Evaporation Hose Routing 4B-5
Water Hose Routing 4B-6

Precautions

Precautions

Precautions for Wire / Hose Routing

CENFH5114000001

Refer to “General Precautions” in Section 00 (Page 00-1).

Component Location

Electrical Component Location

CENFH5114003001

Refer to “Wiring Harness Routing Diagram” in Section 4A (Page 4A-2).

Wire Routing

Schematic and Routing Diagram

Wiring Diagram

CENFH5114102001

Refer to “Wire Color Symbols” in Section 0A (Page 0A-2).

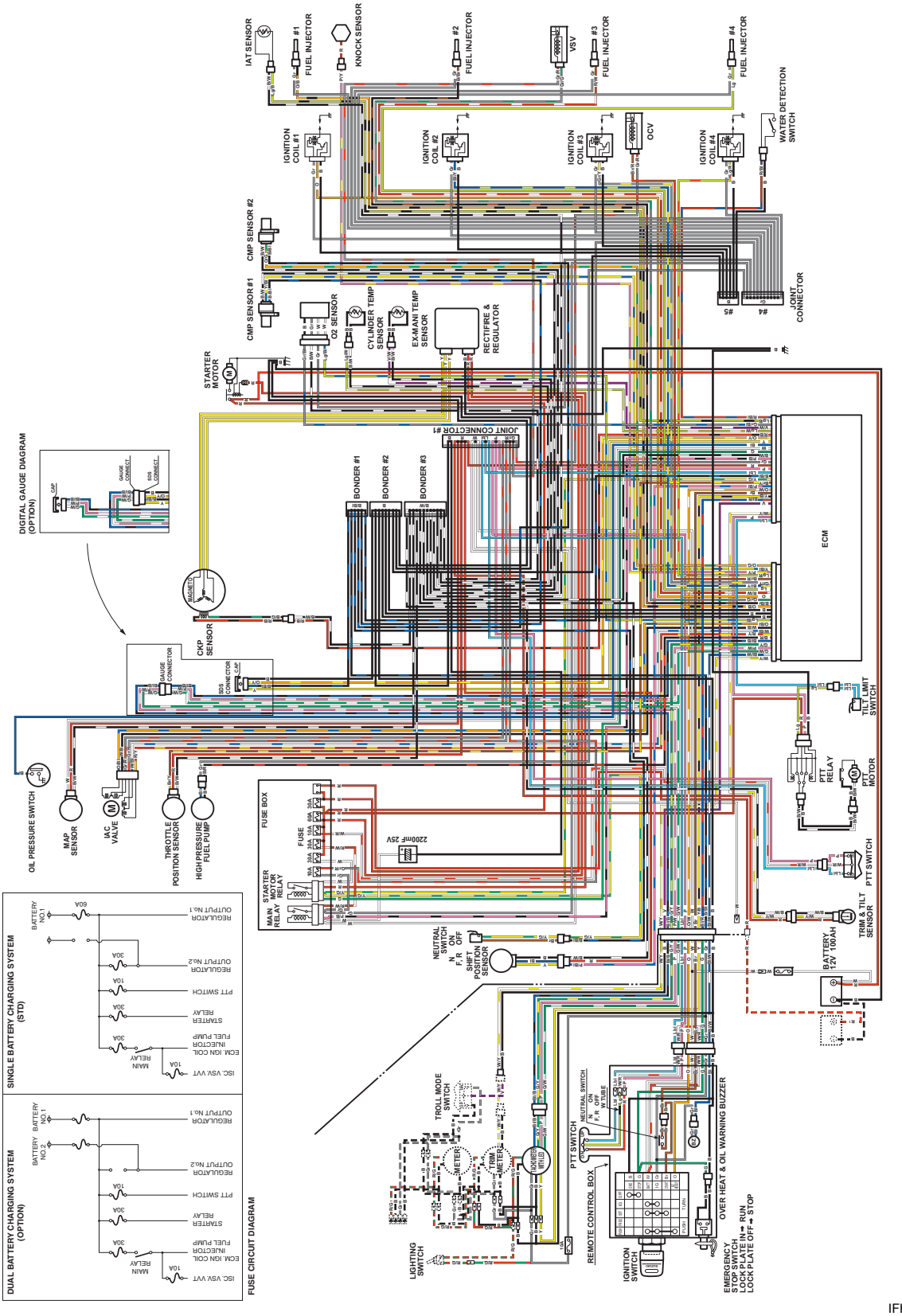

IFH511410001-06

Wiring Harness Routing Diagram

CENFH5114102002

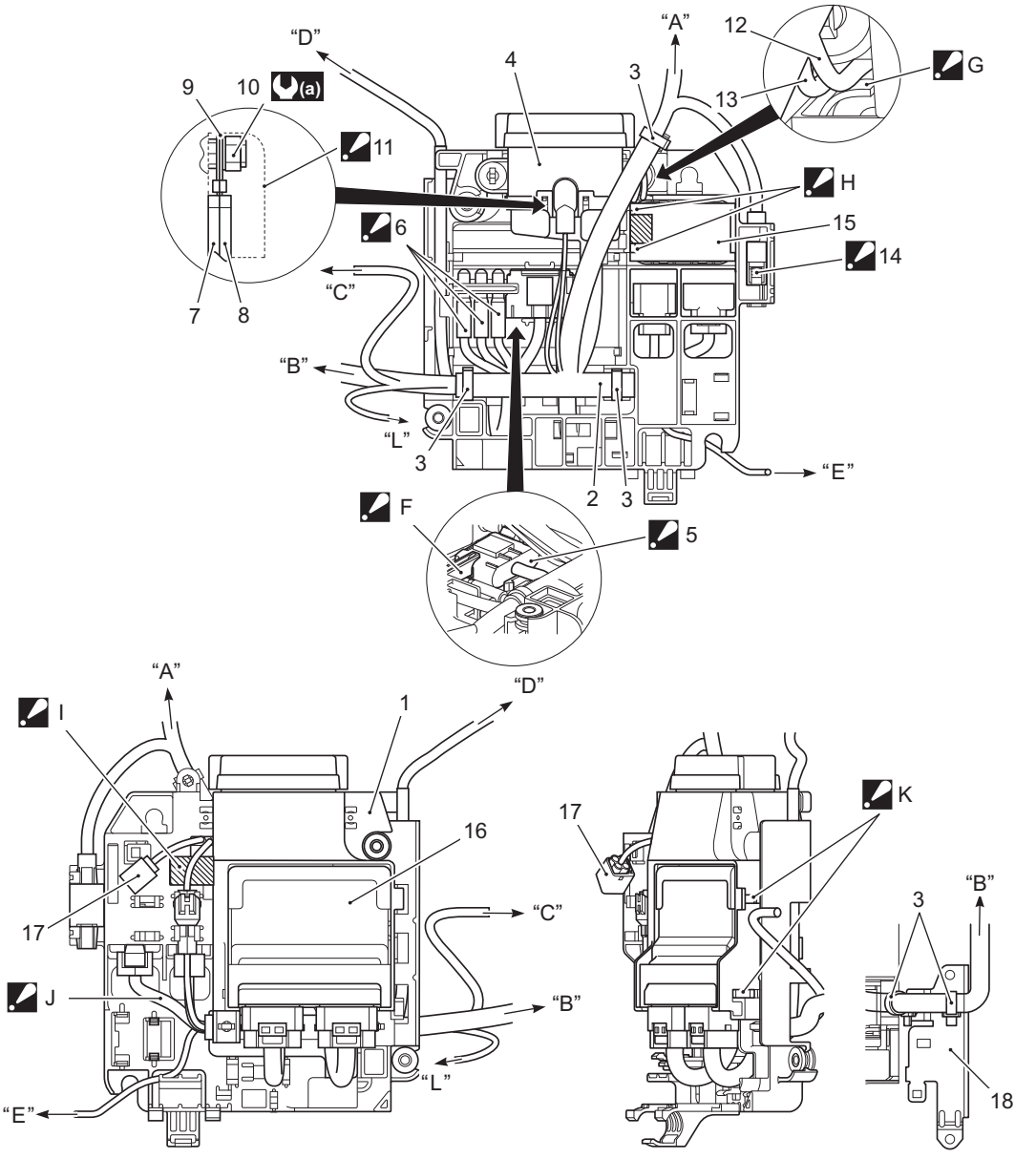

IFH511410002-05

1. Electric parts holder	17. SDS connector
2. Wiring harness	18. Harness bracket
3. Clamp	"A": To IAC valve
4. Fuse box	"B": To ignition coils
5. Joint connector: The joint connector is fixed with stopper as shown.	"C": To rectifier/regulator
6. Lead wire bonder: Arrange lead wire bonder as shown.	"D": To starter motor
7. Main harness	"E": To neutral switch.
8. Main harness	"F": The joint connector is fixed with stopper as shown.
9. Washer	"G": Check position of lead wires after installing PTT relay.
10. Nut	"H": PTT relay is fixed with hooks (H) of electric parts holder as shown.
11. Cap: Insert two main harness lead wires into cap hole and fit back of their terminals together. Cover the terminal with cap.	"I": Set protrusion of PTT relay cushion to square hole of electric parts holder.
12. SDS connector lead wire	"J": Route the lead wire above the hook.
13. Gauge connector lead wire	"K": Set protrusion of ECM cushion to square hole of electric parts holder.
14. Isolator lead wire connector: Set lock part of isolator lead wire connector as shown.	"L": To GND
15. PTT relay	(a): 4.5 N·m (0.45 kgf-m, 3.3 lbf-ft)
16. ECM	

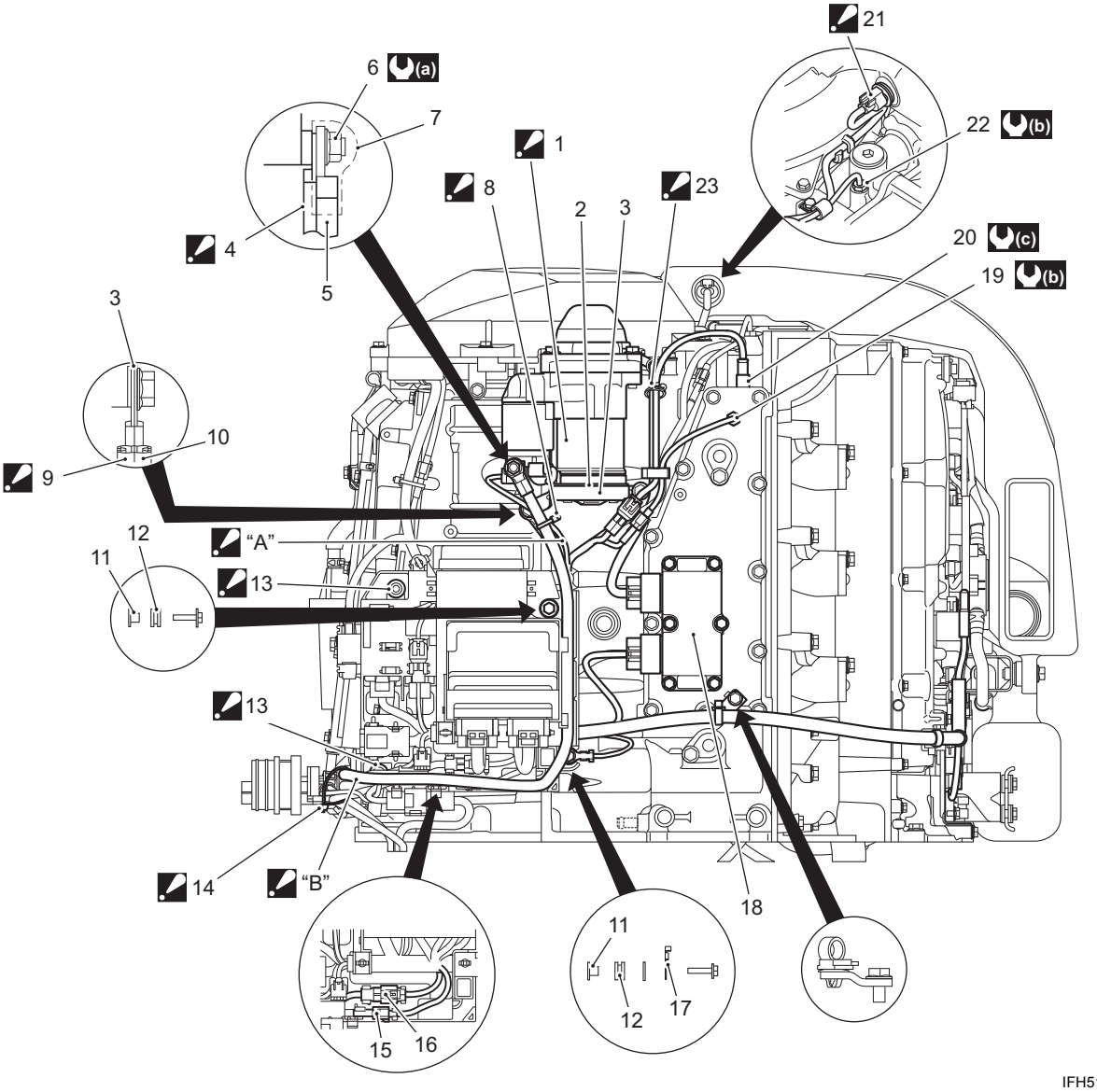

IFH511410003-04

1. Starter motor: Install starter motor after assembling the lower damper (2).	15. Tilt limit switch lead wire connector
2. Starter motor lower damper	16. Trim sensor lead wire connector
3. Starter motor band	17. Main harness GND lead wire
4. Main harness (R) lead wire: Set main harness (R) lead wire parallel to battery positive (+) cable.	18. Rectifier/regulator
5. Battery positive (+) cable	19. Ex. manifold temp. sensor
6. Nut	20. O2 sensor
7. Cap	21. IAT sensor: Set the lock part of connector upward.
8. Clamp: Set the cut portion of clamp to the rear side of engine.	22. Cylinder temp. sensor
9. Main harness GND lead wire: Flat surface of respective cable terminal are put together.	23. Clamp: Bind the stator harness and O2 sensor harness in the left side of engine hook.
10. Battery negative (–) cable	"A". Route main harness (R) lead wire between battery negative (–) and positive (+) cables.
11. Washer	"B". Twist battery cable as shown.
12. Cushion	(a) : 8.5 N·m (0.85 kgf-m, 6.2 lbf-ft)
13. Cushion: Install the cushion to the crankcase bosses.	(b) : 8 N·m (0.8 kgf-m, 5.8 lbf-ft)
14. Clamp: Clamp the main harness, trim sensor lead wire and tilt limit switch lead wire with the battery cable.	(c) : 10 N·m (1.0 kgf-m, 7.2 lbf-ft)

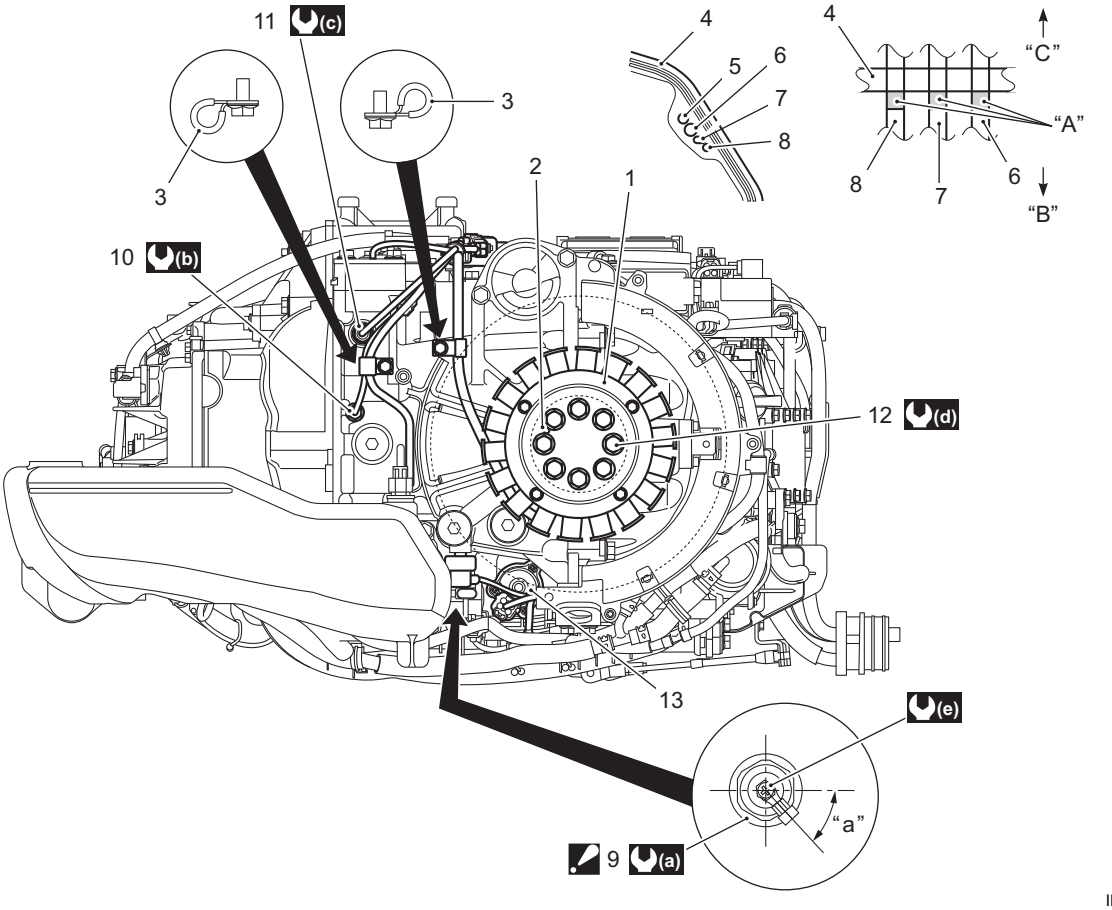

IFH511410004-04

1. Battery charge coil	12. Flywheel bolt
2. Pin	13. IAC valve
3. Clamp	"A": Taping portion
4. Side cover seal	"B": Outside
5. Speedometer hose (optional parts)	"C": Inside
6. Trim sensor lead wire	"a": 45°
7. PTT cable	(a) : 13 N·m (1.3 kgf-m, 9.4 lbf-ft)
8. Tilt limit switch lead wire	(b) : 8 N·m (0.8 kgf-m, 5.8 lbf-ft)
9. Oil pressure switch: Tighten the lead wire 45° as shown. Cover the oil pressure switch with cap.	(c) : 10 N·m (1.0 kgf-m, 7.2 lbf-ft)
10. Cylinder temp. sensor	(d) : 118 N·m (11.8 kgf-m, 85.3 lbf-ft)
11. O2 sensor	(e) : 1.5 N·m (0.15 kgf-m, 1.1 lbf-ft)

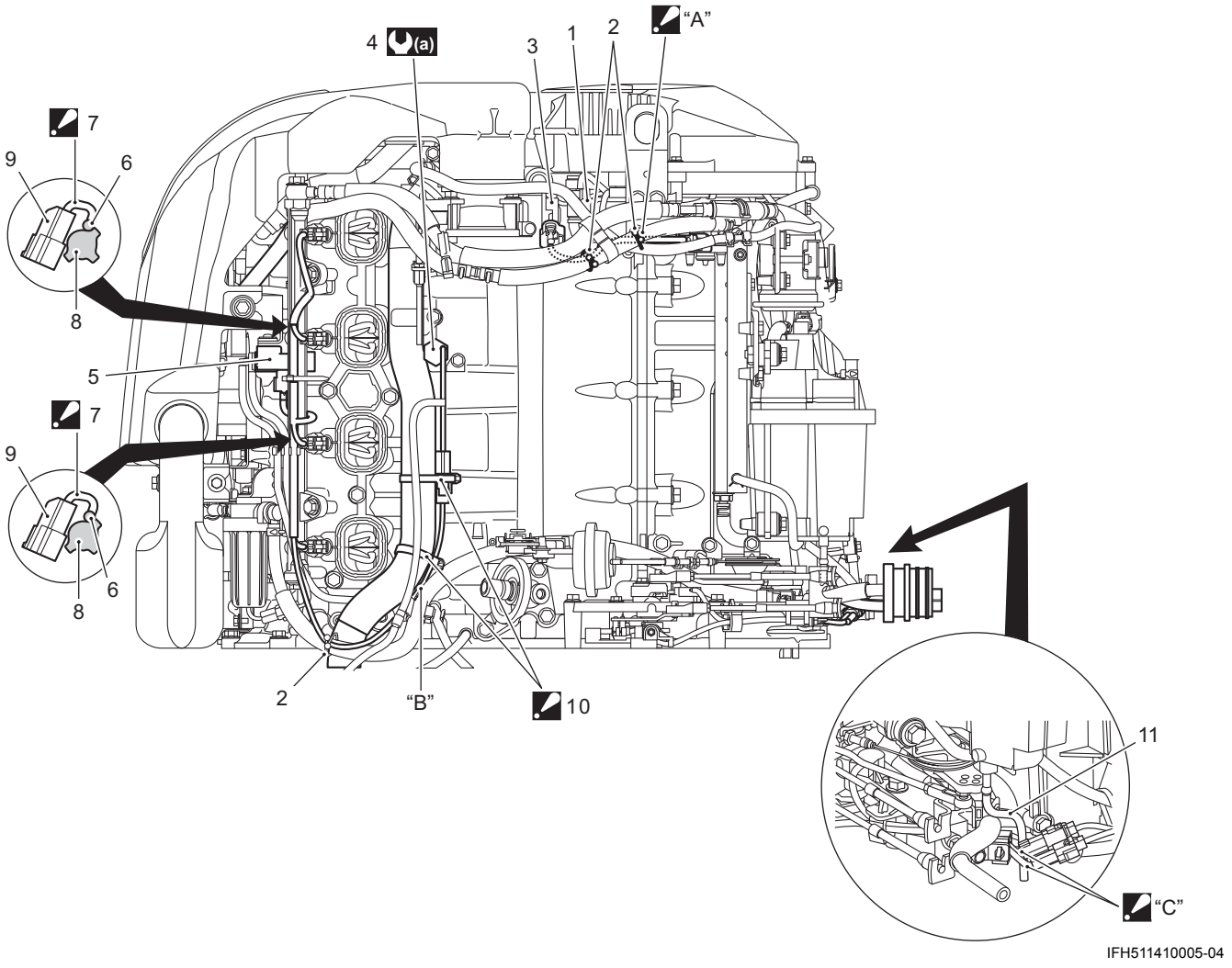

IFH511410005-04

1. IAC valve	9. Fuel injector connector
2. Clamp	10. Clamp: Clamp the knock sensor lead wire at the right side of water return hose.
3. Throttle position sensor	11. Fuel drain hose
4. Knock sensor	"A": Place the clamp in this range.
5. VSV	"B": Route the knock sensor lead wire behind the fuel hose.
6. Harness	"C": Pass the tilt limit switch and trim sensor lead wires outside of the fuel drain hose.
7. Fuel injector lead wire: Make sure not to pinch the fuel injector lead wire between harness and fuel delivery pipe.	(a) : 22 N·m (2.2 kgf-m, 16.0 lbf-ft)
8. Fuel delivery pipe	

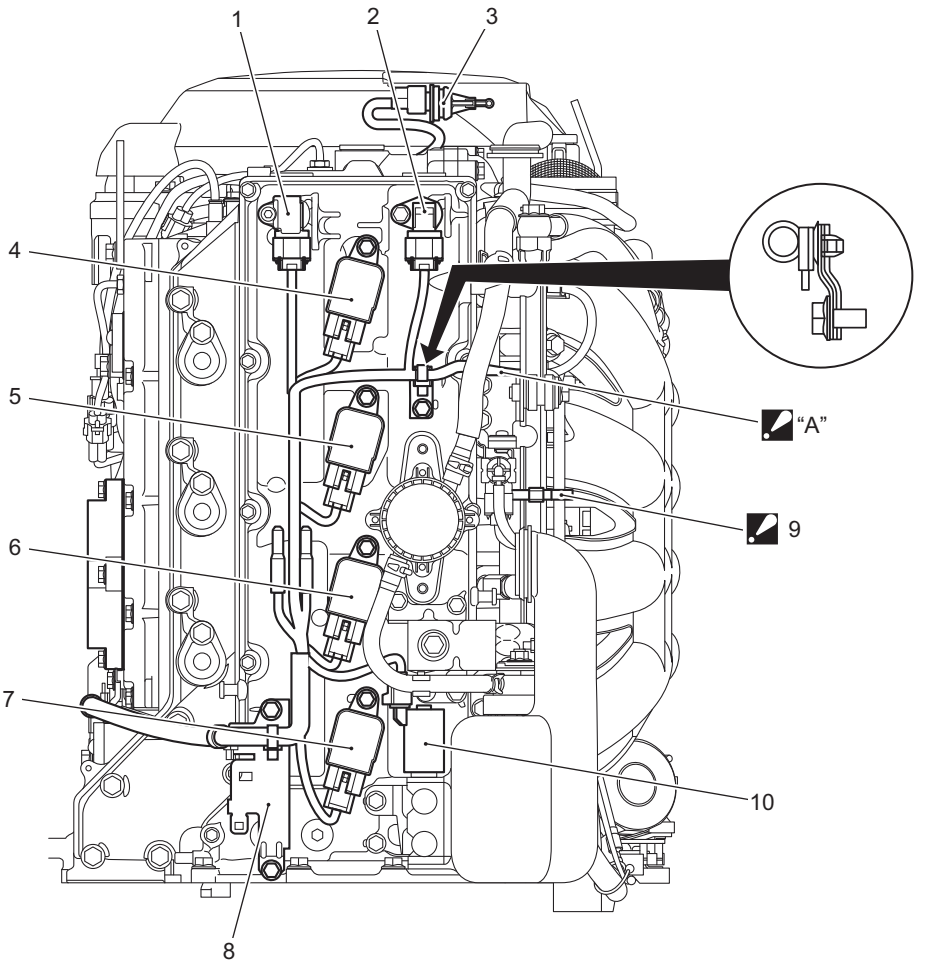

IFH511410006-03

1. CMP sensor #1	7. Ignition coil #4
2. CMP sensor #2	8. Harness bracket
3. IAT sensor	9. Clamp: Place the tip of clamp forward of engine.
4. Ignition coil #1	10. OCV
5. Ignition coil #2	"A": Route harness back of fuel delivery pipe.
6. Ignition coil #3	

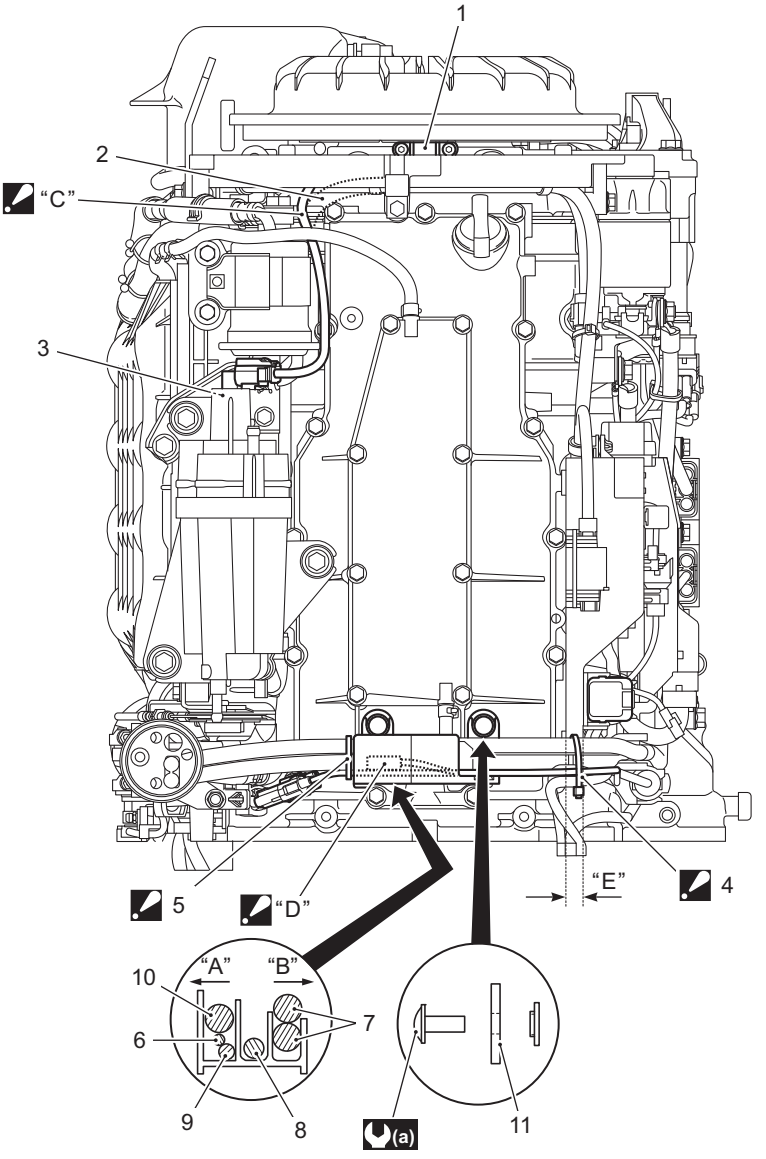

IFH511410007-02

1. CKP sensor	10. Remote controller harness
2. Evaporation hose	11. Cable holder
3. High pressure fuel pump	"A": Front side
4. Clamp: Clamp the main harness, trim sensor lead wire and tilt limit switch lead wire with the battery cable.	"B": Engine side
5. Clamp: Clamp the main harness and battery cable.	"C": Route the high pressure fuel pump lead wire outside the evaporation hose.
6. Main harness	"D": Put the terminal on the main harness.
7. Battery cable	"E": Place the clamp in this range.
8. Water hose	(a) : 5 N·m (0.5 kgf-m, 3.6 lbf-ft)
9. Speedometer hose (optional parts)	

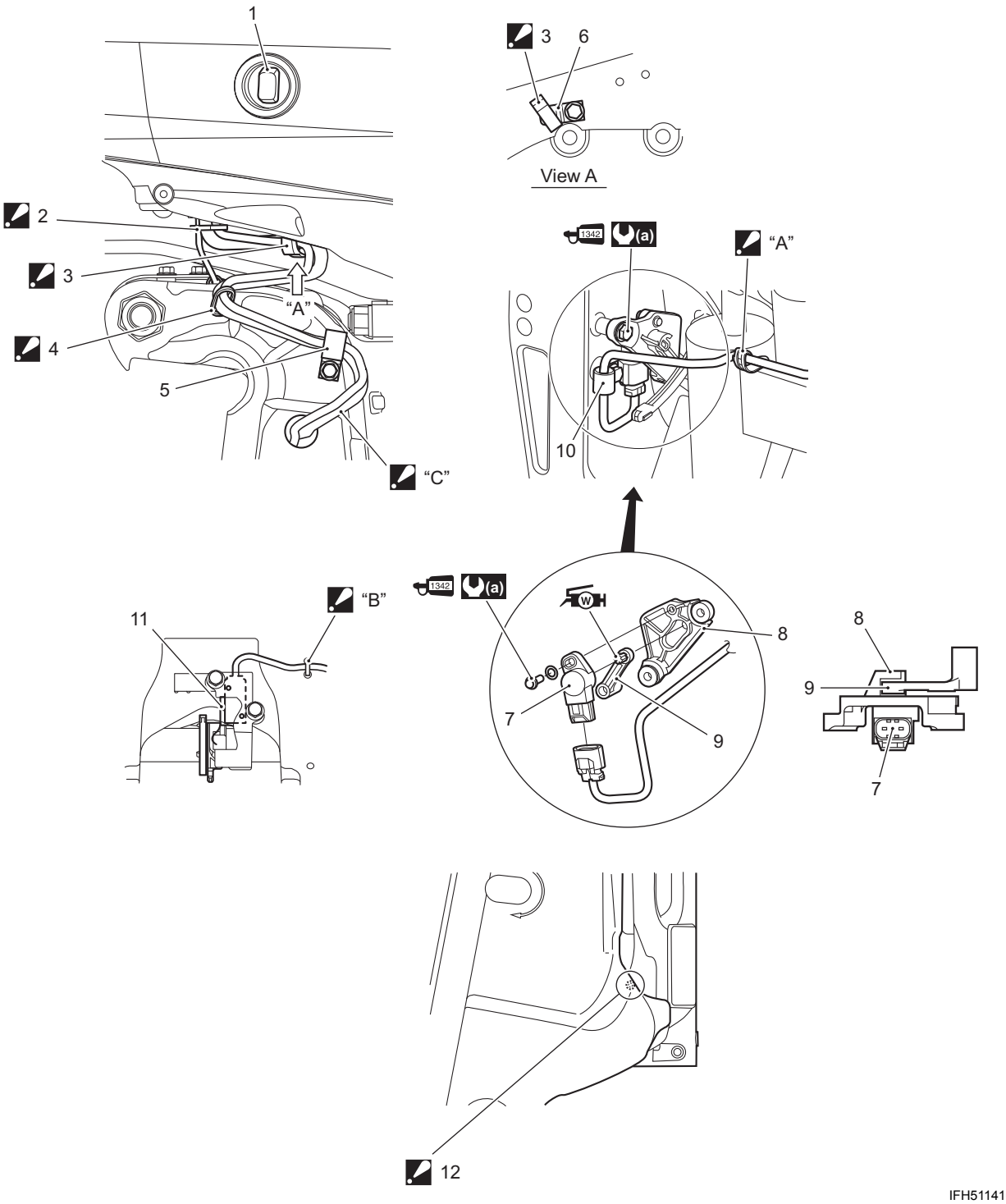

IFH511410008-05

1. PTT switch	10. Clamp
2. Band: Bind three cables within 20 mm (0.79 in) from side cover seal hole.	11. Tilt limit switch
3. Clip: Clamp trim sensor lead wire, PTT cable and speedometer hose (Optional parts).	12. Marking: When lowering the unit to the limit, the marking should be hidden in clamp bracket.
4. Band: Bind center of cables.	"A": Clamp trim sensor lead wire at white taping point. Clamp the lead wire and cable in order of "A" → 2 → 4.
5. Clamp	"B": Clamp tilt limit switch lead wire at yellow taping point.
6. PTT cable clip bracket	"C": Draw lead wires to engine side to avoid slack in this area.
7. Trim sensor	(a) : 6 N·m (0.6 kgf-m, 4.3 lbf-ft)
8. Trim sensor bracket	(w) : Apply SUZUKI water resistant grease.
9. Trim sensor lever	1342 : Apply SUZUKI thread lock 1342.

Fuel / Water Hose Routing

Precautions

Precautions for Fuel / Water Hose Routing

CENFH5114200001

Refer to “General Precautions” in Section 00 (Page 00-1) and “Precautions on Fuel System Service” in Section 1G (Page 1G-1).

Schematic and Routing Diagram

Fuel Hose Routing

CENFH5114202001

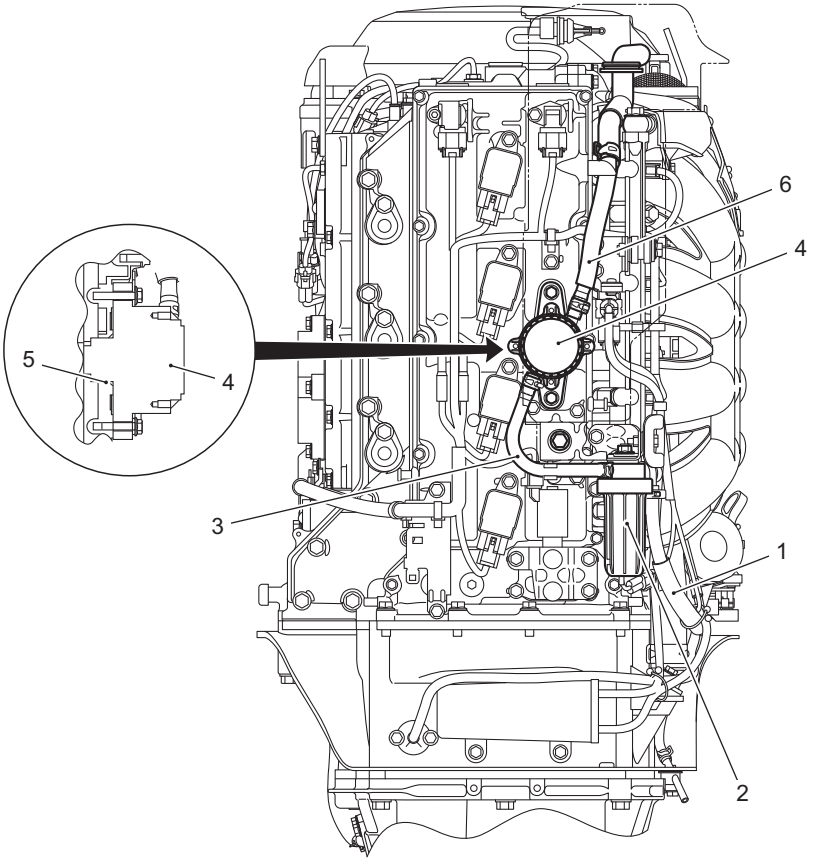

IFH511420001-01

1. Fuel hose (fuel connector to low pressure fuel filter)	4. Low pressure fuel pump
2. Low pressure fuel filter / water detection switch	5. O-ring
3. Fuel hose (low pressure fuel filter to low pressure fuel pump)	6. Fuel hose (low pressure fuel pump to 2-way union)

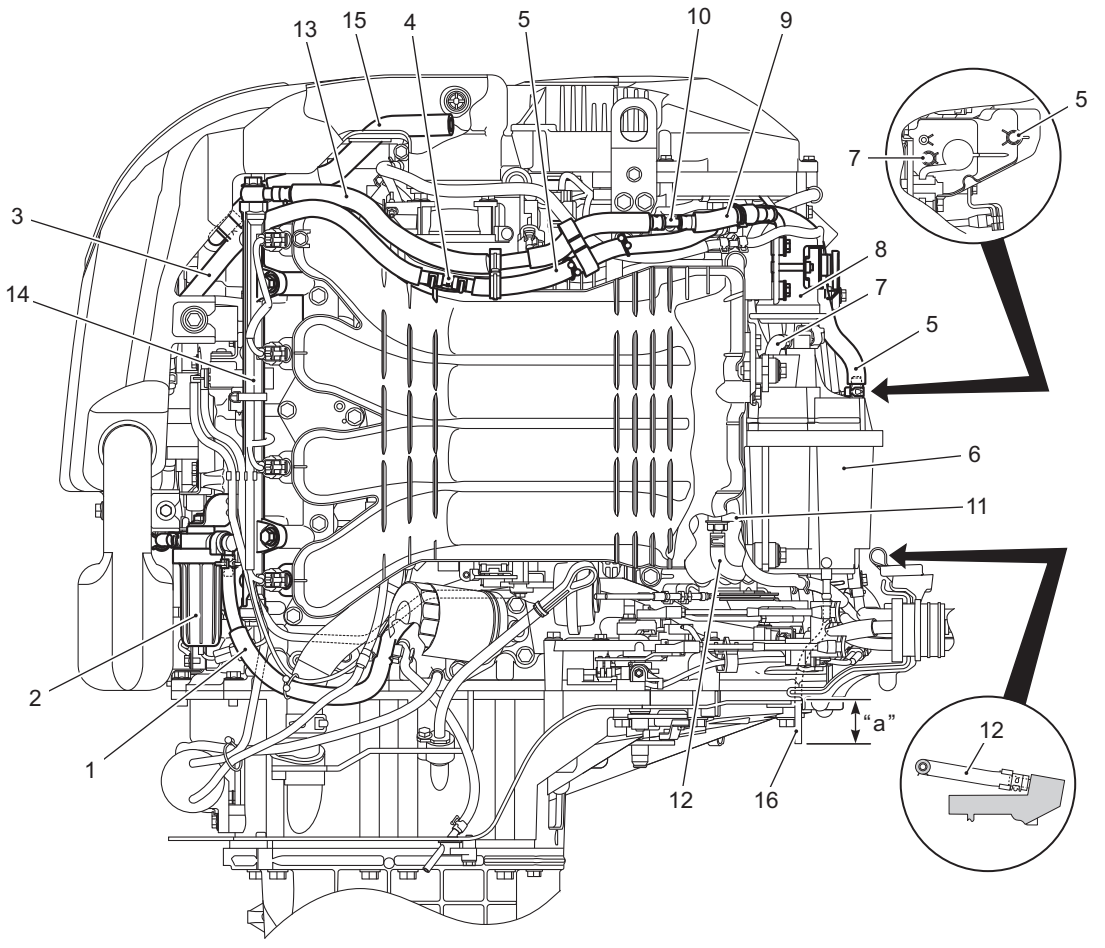

IFH511420002-08

1. Fuel hose (fuel connector to low pressure fuel filter)	10. 3-way union
2. Low pressure fuel filter/water detection switch	11. Fuel cooler
3. Fuel hose (low pressure fuel pump to 2-way union)	12. Fuel hose (fuel cooler to fuel vapor separator)
4. 2-way union	13. Fuel hose (3-way union to fuel delivery pipe)
5. Fuel hose (2-way union to fuel vapor separator)	14. Fuel delivery pipe
6. Fuel vapor separator	15. Breather hose
7. Fuel hose (fuel vapor separator to high pressure fuel filter)	16. Fuel drain hose
8. High pressure fuel filter	"a": 40 mm (1.57 in.) or more
9. Fuel hose (high pressure fuel filter to 3-way union)	

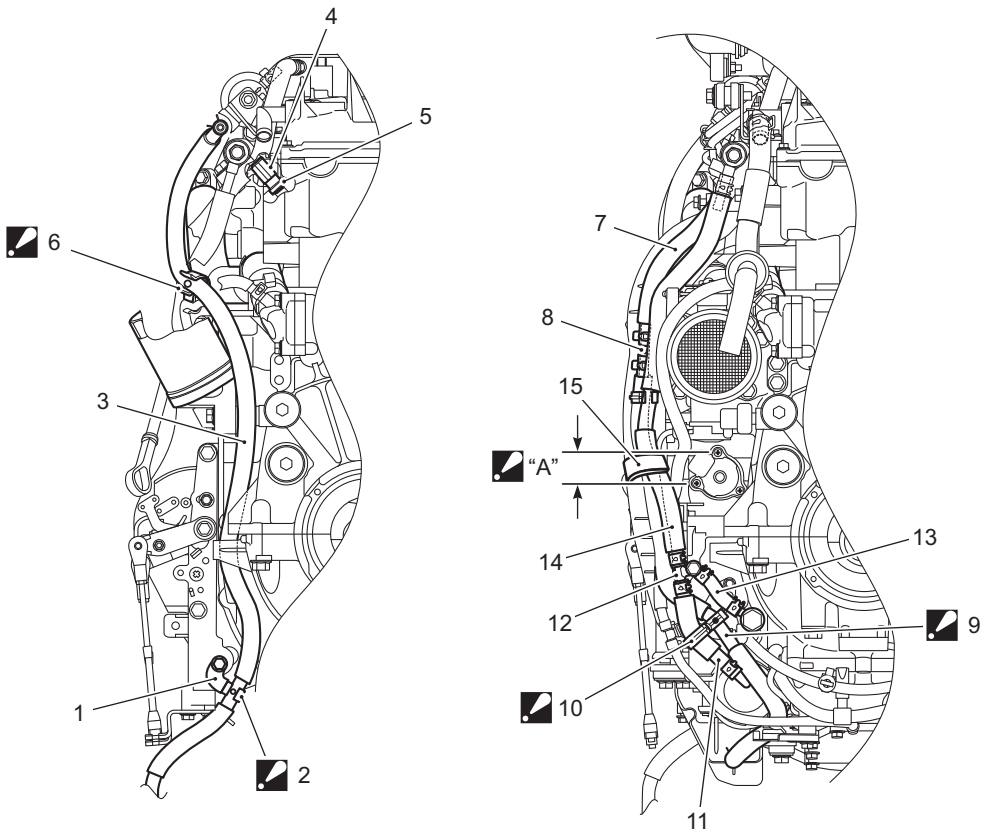

IFH511420003-04

1. Fuel hose clamp bracket	9. Fuel hose (2-way union to fuel vapor separator): Pass the fuel hose (2-way union to fuel vapor separator) so as not to be squashed between MAP sensor and fuel hose guard.
2. Clamp: The mark position of the fuel hose (3) is installed to the clamp.	10. Clamp: Place the clamp onto the mark position of fuel hose. Make sure fuel hose is away from 3-way union hose clip.
3. Fuel hose (fuel connector to low pressure fuel filter)	11. Fuel hose (high pressure fuel filter to 3-way union)
4. Fuel injector	12. 3-way union
5. Fuel injector cushion	13. Fuel hose (3-way union to fuel cooler)
6. Clamp: The mark position of the fuel hose (3) is installed to the clamp.	14. Fuel hose (3-way union to fuel delivery pipe)
7. Fuel hose (low pressure fuel pump to 2-way union)	15. Clamp
8. 2-way union	"A": Place the clamp (15) in this range.

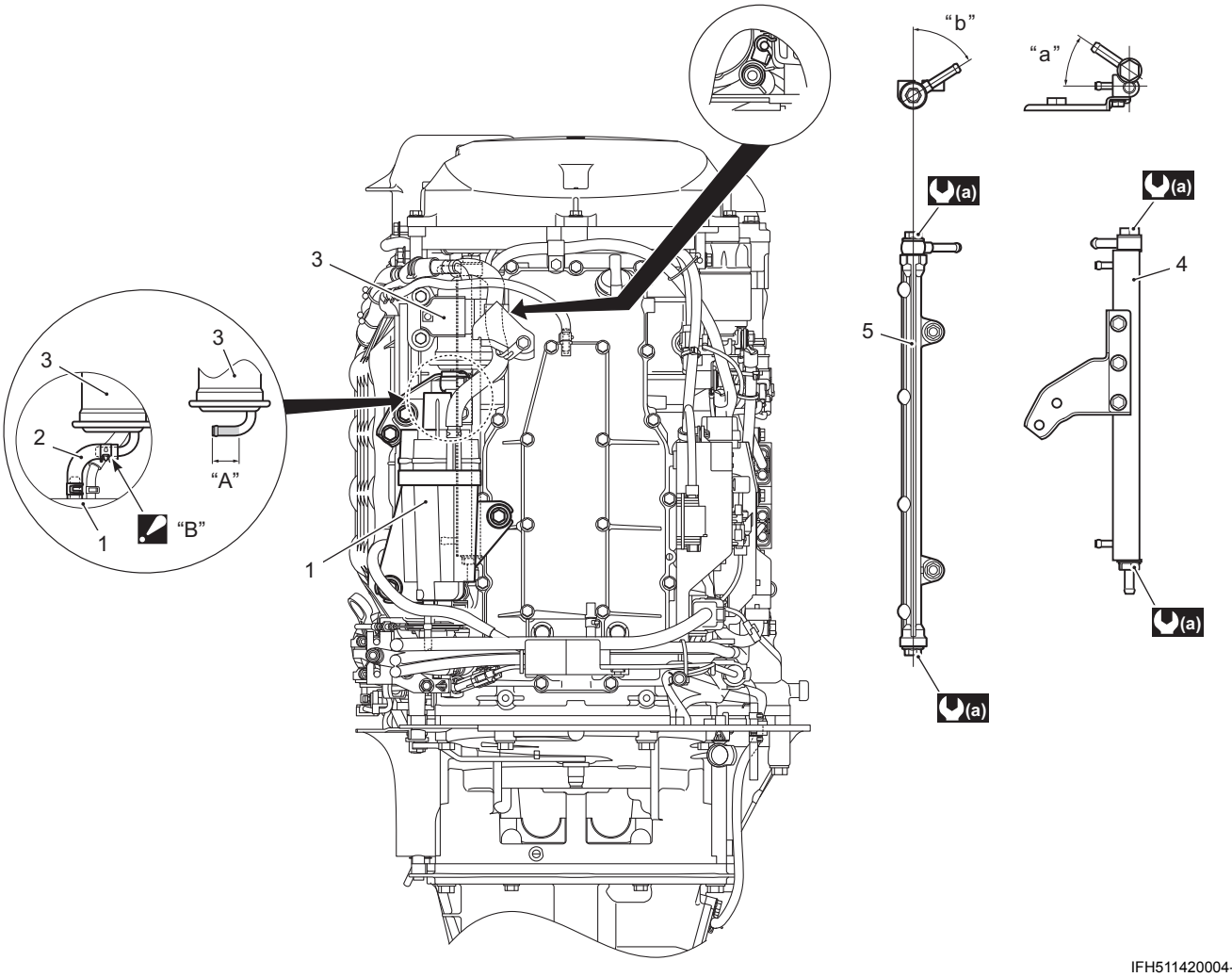

IFH511420004-03

1. Fuel vapor separator	"A": Unpainted area
2. Fuel hose (fuel vapor separator to high pressure fuel filter)	"B": Insert the fuel hose (fuel vapor separator to high pressure fuel filter) to high pressure fuel filter union unpainted area.
3. High pressure fuel filter	"a": 35°
4. Fuel cooler	"b": 58°
5. Fuel delivery pipe	(a): 35 N·m (3.5 kgf-m, 25.3 lbf-ft)

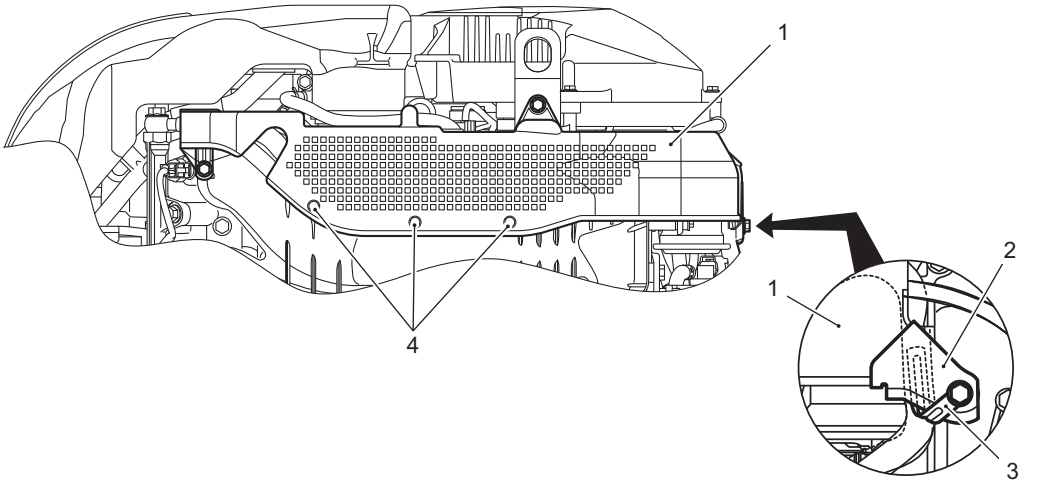

IFH511420005-01

1. Fuel hose guard	3. Clamp
2. Fuel hose guard guide	4. Cushion

Evaporation Hose Routing

CENFH5114202002

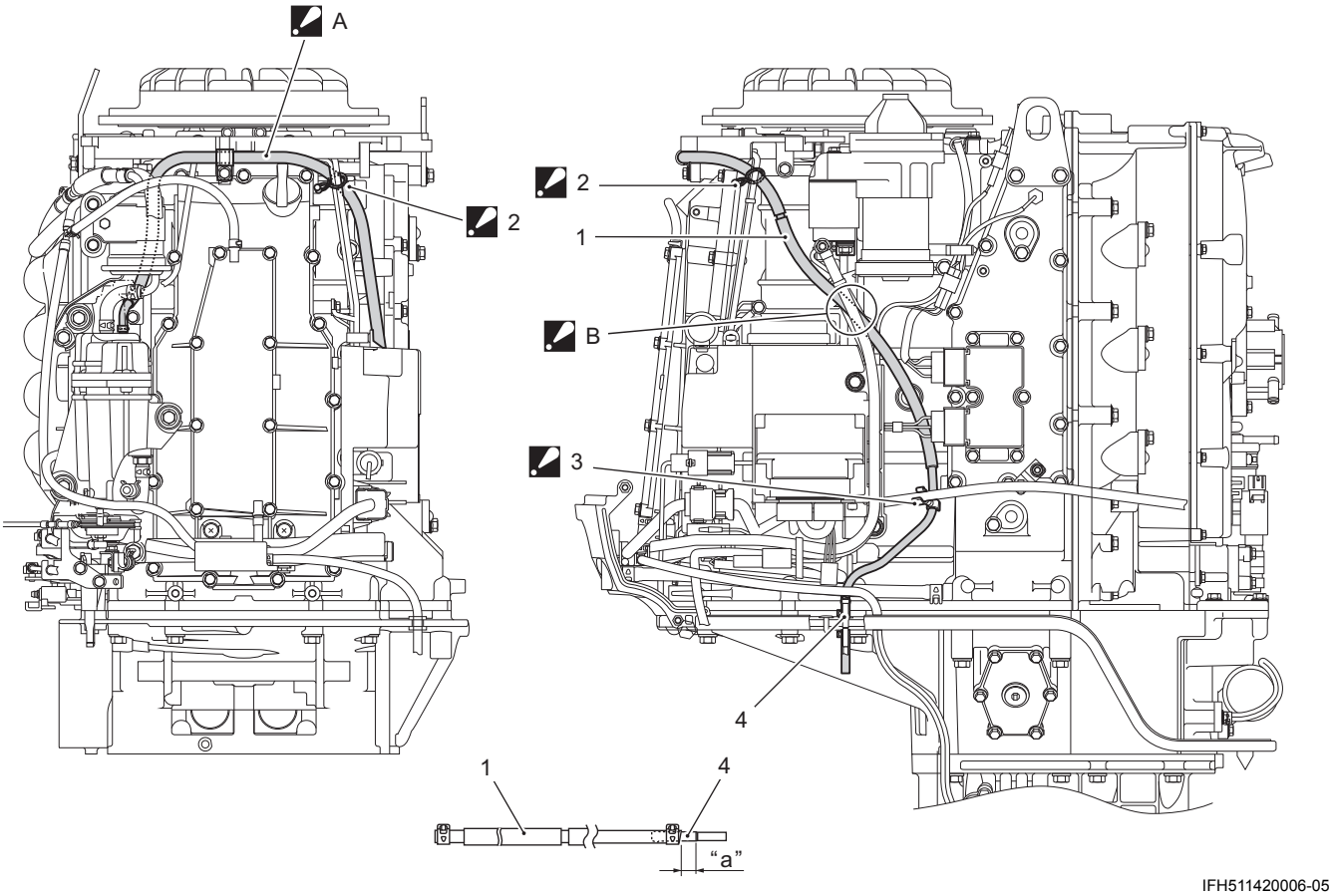

IFH511420006-05

1. Evaporation hose	"A": Assemble the evaporation hose outward the ring gear under cover.
2. Clamp: Clamp the evaporation hose not to touch the balancer cover.	"B": Pass the evaporation hose between battery positive (+) and negative (-) cables.
3. Clamp: Install the clamp on marking tape on harness.	"a": 8 – 12 mm (0.31 – 0.47 in.)
4. Hose union	

Water Hose Routing

CENFH5114202003

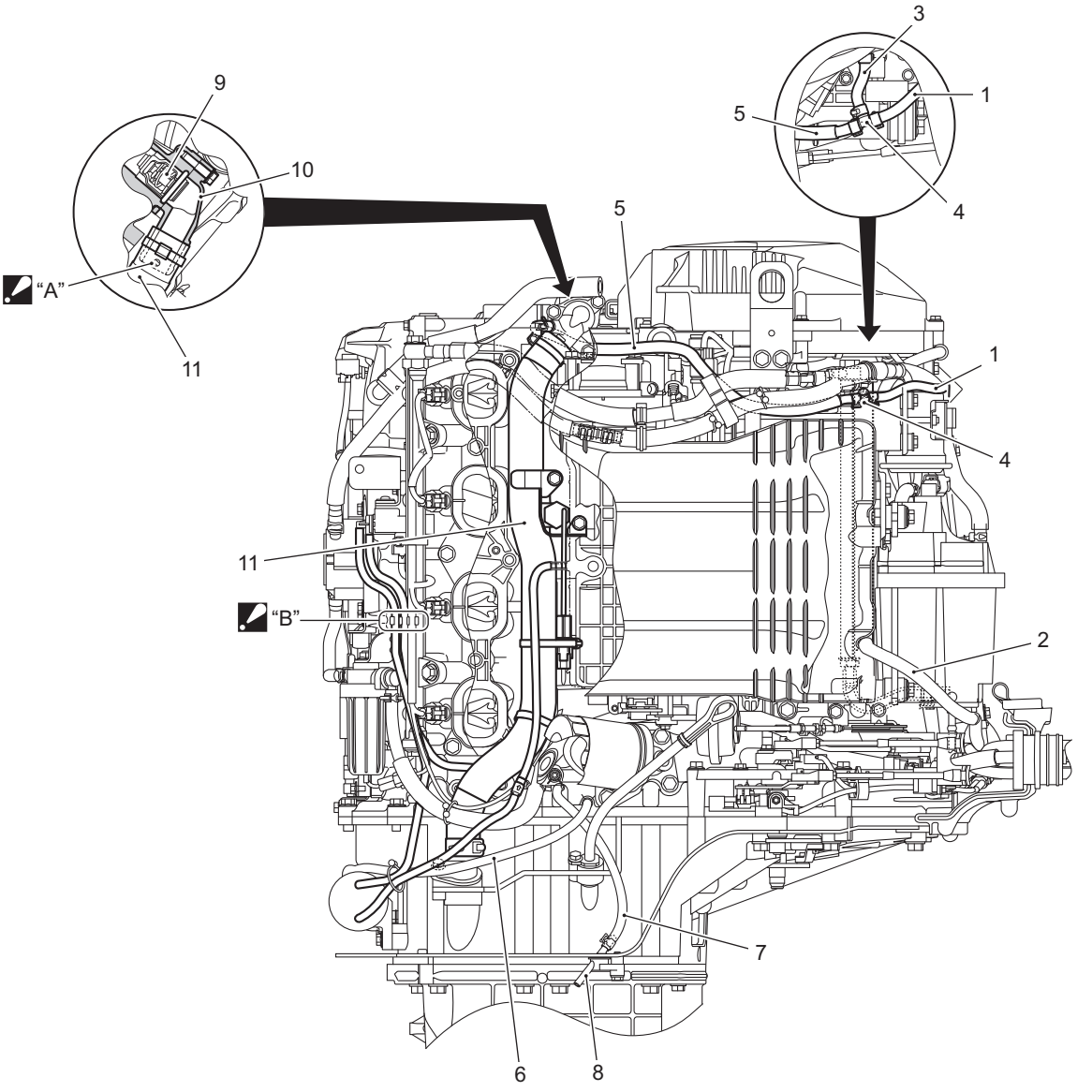

IFH511420007-06

1. Water hose (balancer water jacket cover to 3-way union)	8. Water indicator
2. Water hose (3-way union to fuel cooler)	9. Thermostat
3. Water hose (fuel cooler to 3-way union)	10. Thermostat cover
4. 3-way union	11. Water return hose
5. Water hose (3-way union to thermostat cover)	"A": Connect the water return hose to thermostat cover with the painting mark side "A" up.
6. Water hose (engine holder to cylinder block)	"B": Place the clamp between fuel injector #3 and low pressure fuel filter bracket.
7. Water hose (cylinder block to water indicator)	

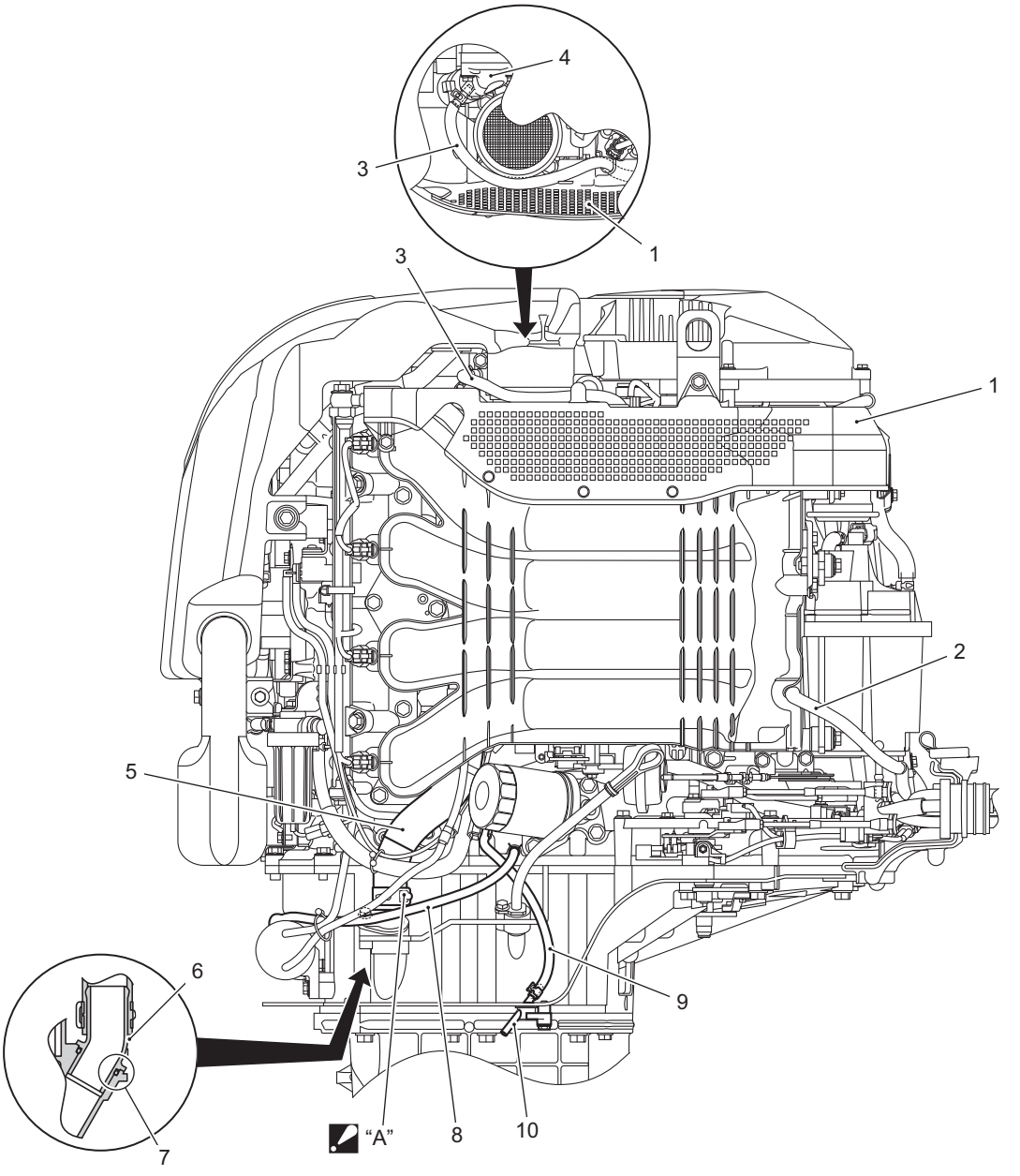

IFH511420008-05

1. Fuel hose guard	7. O-ring
2. Water hose (3-way union to fuel cooler)	8. Water hose (engine holder to cylinder block)
3. Water hose (3-way union to thermostat cover)	9. Water hose (cylinder block to water indicator)
4. Thermostat cover	10. Water indicator
5. Water return hose	"A". Face the clip tip forward.
6. Water return union	

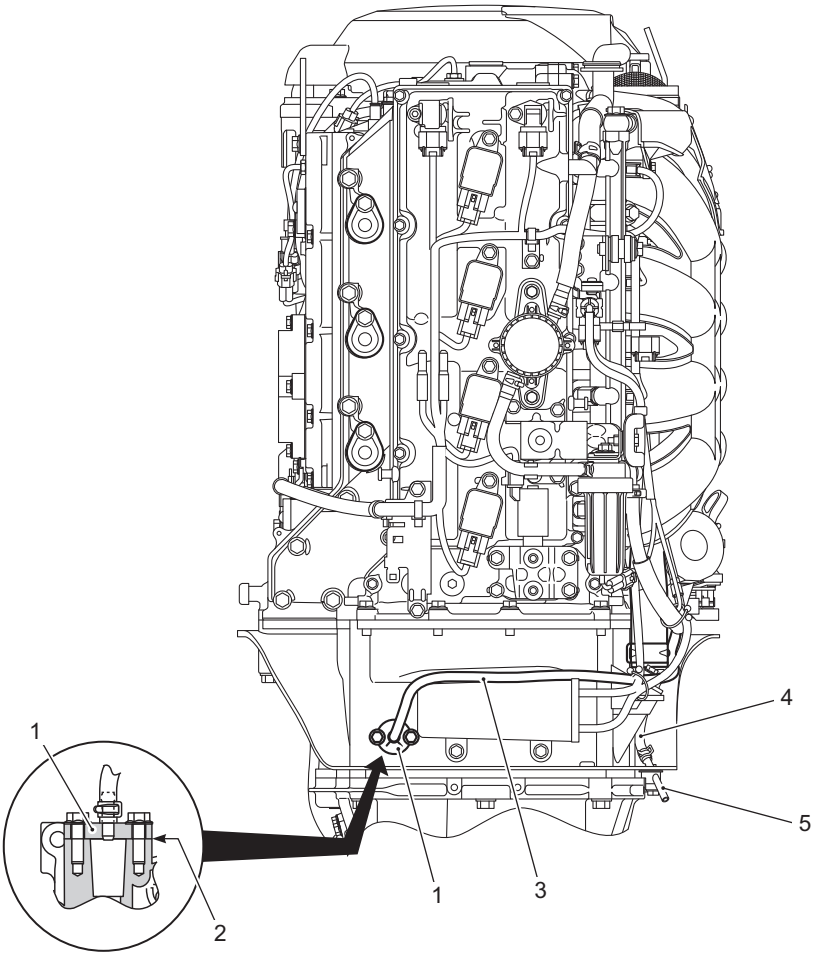

IFH511420009-04

1. Engine holder cover	4. Water hose (cylinder block to water indicator)
2. Gasket	5. Water indicator
3. Water hose (engine holder to cylinder block)	

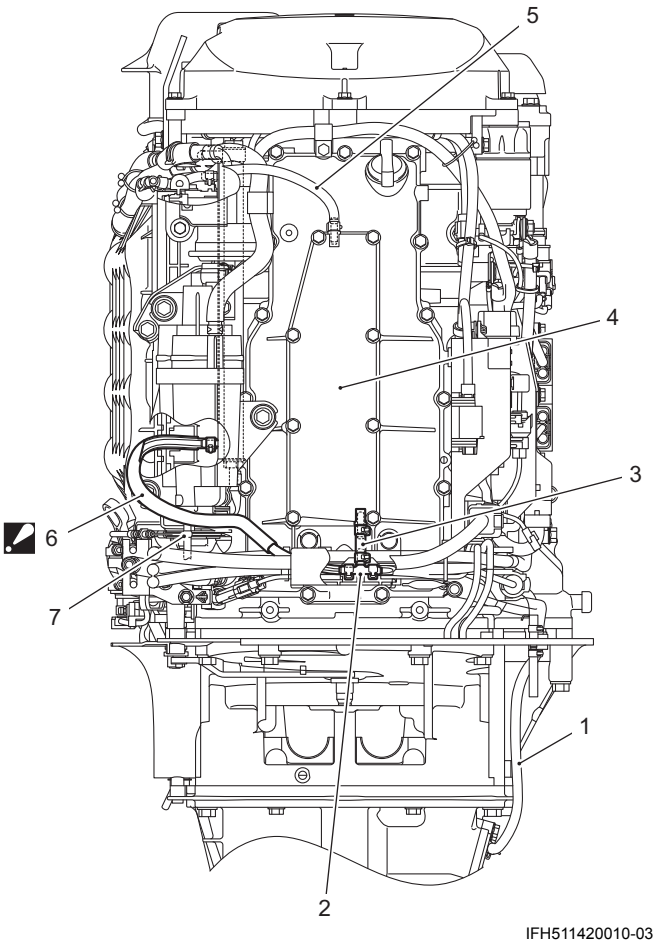

IFH511420010-03

1. Water hose (oil pan to 3-way union)	5. Water hose (balancer water jacket cover to 3-way union)
2. 3-way union	6. Water hose (3-way union to fuel cooler): Route water hose (3-way union to fuel cooler) outside of the drain union of fuel vapor separator.
3. Water hose (3-way union to balancer water jacket cover)	7. Fuel vapor separator drain union
4. Balancer water jacket cover	

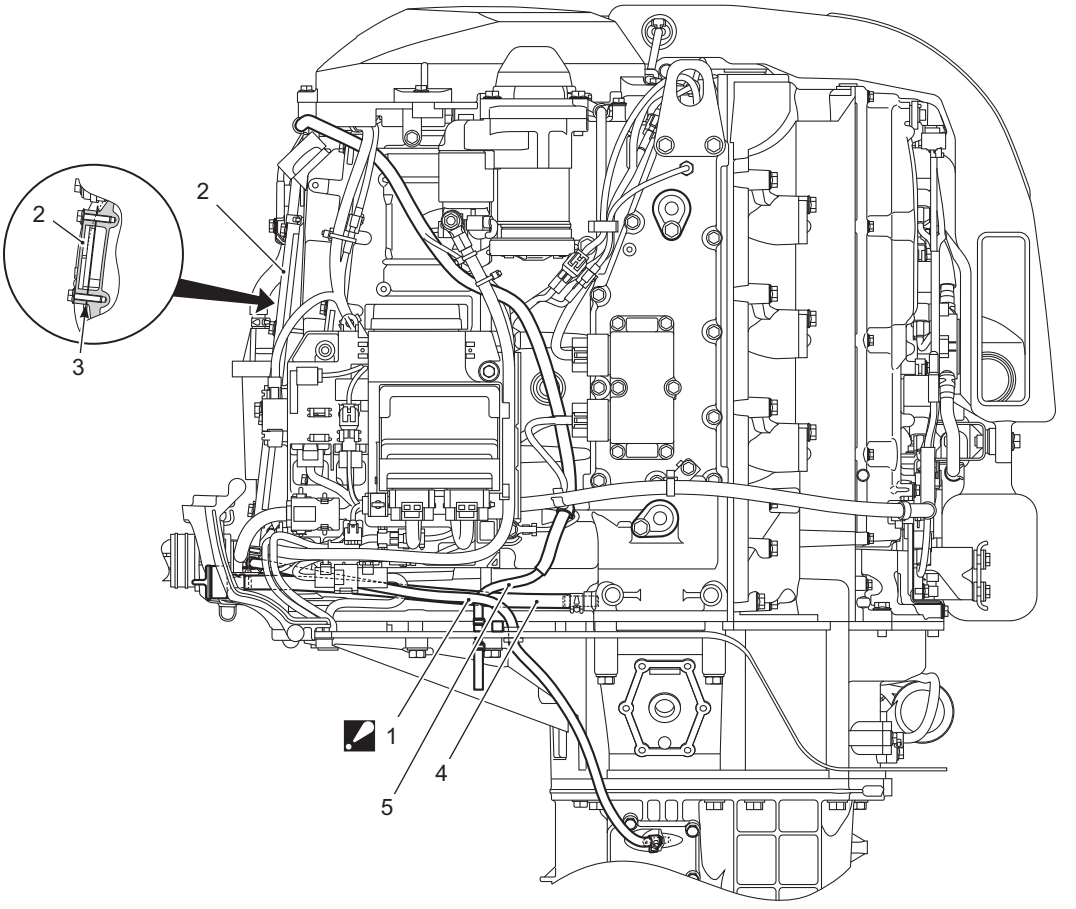

IFH511420011-05

1. Water hose (oil pan to 3-way union): Route water hose (oil pan to 3-way union) outside of the evaporation hose.	4. Water flush hose
2. Balancer water jacket cover	5. Evaporation hose
3. Gasket	

Prepared by

SUZUKI MOTOR CORPORATION

Outboard Motor Engineering Department

October, 2014
Manual No. 99500-96L00-01E
Printed in Japan



SUZUKI MOTOR CORPORATION

Printed in Japan TK
2014