Parts Manual

Cat.# 90-891749001

Revised 09-12-2020

Table of Contents

Cat.# 90-891749001

Service and Support Material 1
Decal Sets 3
Sterndrive Unit Chart Bravo I-III XR (Standard Transom) 5
Sterndrive Unit Chart Bravo I-III XR (Integrated Transom) 9
Sterndrive Unit Chart Bravo And Bravo I XR (SportMaster) 11
Transom Assembly Chart 17
Continuity Kit 19
Transom Plate and Shift Cable 21
Gimbal Housing (2A514802 and Below) 25
Gimbal Housing Blue Connector (2A514803 and Up) 29
Gimbal Housing (Integrated Transom) 33
Gimbal Ring and Steering Lever 39
Gimbal Ring (Integrated Transom) 43
Bell Housing (2A514802 and Below) 47
Bell Housing Blue Connector (2A514803 and Up) 49
Bell Housing (Integrated and Hi Performance Transom) 51
Driveshaft Housing and Drive Gears 55
Universal Joint and Shift Components 59
Gear Housing (Bravo I XR) 63
Gear Housing (Bravo III) 69
Gear Housing (Bravo I XR/SportMaster)(0M955633 and Below) 75
Gear Housing (Bravo I XR/SportMaster/Sport)(0M955634 and Up) 81
Trim Cylinders and Hydraulic Hoses (Standard Transoms) 87
Trim Cylinder Components S/N 2A480243 and Below 91
Trim Pump Assembly (Complete) 93
Trim Pump and Motor Components 95
Power Steering Actuator (Magnum And Hi-Performance Transom) 97
Power Steering Actuator (Integrated Transom) 99
Gimbal Housing Cover 101
Mercathode Kit 103
Mercathode Kit (Integrated Transom) 105
Gear Lube Monitor Components 107
Special Tools (Driveshaft Housing) 109
Special Tools (Transom) 111
Special Tools (Gear Housing Bravo I) 113

Service and Support Material

Cat.# 90-891749001

Service and Support Material

Ref #	Part Class	Part Number	Description	Comments	Qty	Note
NS	0090	891749001	PARTS MANUAL Bravo XR I - III Sport Master		1	
NS	0090	8631601	SERVICE MANUAL #28		1	
NS	0090	863160030	SUPPLMENT Service Manual		1	
NS	0000	891589A01	SERVICE KIT	(Integrated Transom Bleeder Valve Kit)	1	

Decal Sets

Cat.# 90-891749001

Decal Sets

Ref #	Part Class	Part Number	Description	Comments	Qty	Note
NS	0037	881763A04	DECAL SET	Bravo-I XR / Sportmaster [0M975807] & Below	1	
NS	0037	881762A04	DECAL SET	Bravo-III XR [2A344649] & Below	1	
NS	0037	898290A10	DECAL SET	SEACORE-Bravo-III XR (gas and diesel) [2A344649] & Below	1	
NS	0037	8M0121131	DECAL RACING XR Drive Housing	Sportmaster/Sport [0M975808] & Up	2	
NS	0037	8M0121131	DECAL RACING XR Drive Housing	Bravo I and III [2A344650] & Up	2	
NS	0037	8M0121128	DECAL M Icon Drive Housing	Sportmaster/Sport [0M975808] & Up	1	
NS	0037	8M0121128	DECAL M Icon Drive Housing	Bravo I and III [2A344650] & Up	1	
NS	0037	8M0121132	DECAL ITS ITS Steering Cylinder	[0M975908] & Up	2	
NS	0037	8M0121133	DECAL Mercury ITS Gimbal Housing	[0M975908] & Up	1	

Sterndrive Unit Chart Bravo I-III XR (Standard Transom)

Cat.# 90-891749001

Sterndrive Unit Chart Bravo I-III XR (Standard Transom)

Ref #	Part Class	Part Number	Description	Comments	Qty	Note
NS	0005	5E31800TP	STERNDRIVE Bravo-I XR (1.26:1 Ratio)(Dual Water Pick-Up)		1	[1]
NS	0005	5E36800TP	STERNDRIVE Bravo-I XR (1.26:1 Ratio)(Low Water Pick-Up)		1	
NS		5E31900TP	STERNDRIVE Bravo-I XR (1.35:1 Ratio)(Dual Water Pick-Up)	[2A344649] & Below	1	[2]
NS	0005	5E31900UP	STERNDRIVE Bravo I XR 1.35:1 DWP	[2A344650] & Up	1	
NS	0005	5E36900TP	STERNDRIVE Bravo-I XR (1.35:1 Ratio)(Low Water Pick-Up)		1	[3]
NS	0005	5E32900TP	STERNDRIVE Bravo-I XR Diesel (1.35:1)		1	
NS	0005	5E31200TP	STERNDRIVE Bravo-I XR (1.50:1 Ratio)(Dual Water Pick-Up)	[2A344649] & Below	1	[4]
NS	0005	5E31200UP	STERNDRIVE Bravo I XR 1.50:1 DWP	[2A344650] & Up	1	
NS	0005	5E36200TP	STERNDRIVE Bravo-I XR (1.50:1 Ratio)(Low Water Pick-Up)		1	[5]
NS	0005	5E32200TP	STERNDRIVE Bravo-I XR (1.50:1) (Dual-Water Pickup)		1	
NS	0005	5X32200TP	STERNDRIVE Bravo-I XR Diesel (1.50:1) (Dual-Water Pickup) Seacore		1	
NS		5H41300TP	STERNDRIVE Bravo-III XR Gas (1.65:1 Ratio)		1	[6]
NS	0005	5T32300TP	STERNDRIVE Bravo-II XR Diesel (1.65:1)		1	
NS		5H42300TP	STERNDRIVE Bravo-III XR Diesel (1.65:1)		1	
NS	0005	5M42300TP	STERNDRIVE Bravo-III XR Diesel (1.65:1) (SEACORE)		1	
NS	0005	5M41400TP	STERNDRIVE Bravo-III XR (1.81:1)	SEACORE	1	
NS	0005	5H42400TP	STERNDRIVE Bravo-III XR Diesel (1.81:1)		1	
NS	0005	5M42400TP	STERNDRIVE Bravo III XR Diesel (1.81:1) Seacore		1	
NS		5H41600TP	STERNDRIVE Bravo-III XR Gas (2.00:1 Ratio)		1	[7]
NS	0005	5M41600TP	STERNDRIVE Bravo-III XR (2.00:1) Seacore		1	
NS	0005	5H41600TZ	STERNDRIVE Bravo-III XR Gas (2.00:1 Ratio) Dual Water Pick-Up		1	
NS	0005	5H42300TZ	STERNDRIVE Bravo-III XR Diesel (1.65:1) Dual Water Pick-Up		1	
NS		5H42400TZ	STERNDRIVE Bravo-III XR Diesel (1.81:1) Dual Water Pick-Up		1	
NS	0005	5H41400TZ	STERNDRIVE Bravo-III XR (1.81:1 Ratio) Dual Water Pick-Up	[2A344649] & Below	1	
NS	0005	5H41400UP	STERNDRIVE Bravo III XR 1.81:1 DWP	[2A344650] & Up	1	
NS	0005	5H41410TZ	STERNDRIVE Bravo-III XR Integrated (1.81:1 Ratio) Dual Water Pick-Up		1	

Sterndrive Unit Chart Bravo I-III XR (Standard Transom)

Cat.# 90-891749001

Sterndrive Unit Chart Bravo I-III XR (Standard Transom)

Ref #	Part Class	Part Number	Description	Comments	Qty	Note
NS		5H41300TT	STERNDRIVE Bravo-III XR Gas (1.65:1) Dual Water Pick-Up		1	
NS	0005	5H42600TZ	STERNDRIVE Bravo-III XR Diesel (2.00:1 Ratio) Dual Water Pick-Up		1	

PART NOTES:

[1] - Alternate part numbers:

5E31800TPService Part

5E31800TSProduction

[2] - Alternate part numbers:

5E31900TPService Part

5E31900TSProduction

[3] - Alternate part numbers:

5E36900TPService Part

5E36900TSProduction

[4] - Alternate part numbers:

5E31200TPService Part

[5] - Alternate part numbers:

5E36200TPService Part

5E36200TSProduction

[6] - Alternate part numbers:

5H41300TPService Part

5H41300TSProduction

[7] - Alternate part numbers:

5H41600TPService Part

5H41600TSProduction

Sterndrive Unit Chart Bravo I-III XR (Integrated Transom)

Cat.# 90-891749001

Sterndrive Unit Chart Bravo I-III XR (Integrated Transom)

Ref #	Part Class	Part Number	Description	Comments	Qty	Note
NS	0005	5E31810TP	STERNDRIVE Bravo-I XR, Integrated (1.26:1 Raio)(Dual Water Pick-Up)		1	
NS		5E31910TP	STERNDRIVE Bravo-I XR, Integrated (1.35:1 Ratio)(Dual Water Pick-Up)	[2A344649] & Below	1	
NS	0005	5E31910UP	STERNDRIVE Bravo I XR 1.35:1 DWP ITS	[2A344650] & Up	1	
NS	0005	5E31210TP	STERNDRIVE Bravo-I XR, Integrated (1.50:1Ratio)(Dual Water Pick-Up)	[2A344649] & Below	1	
NS	0005	5E31210UP	STERNDRIVE Bravo I XR 1.50:1 DWP ITS	[2A344650] & Up	1	
NS	0005	5E36810TP	STERNDRIVE Bravo-I XR, Integrated (1.26:1 Ratio)(Low Water Pick-Up)		1	
NS	0005	5E36910TP	STERNDRIVE Bravo-I XR, Integrated (1.35:1 Ratio)(Low Water Pick-Up)		1	
NS		5E36210TP	STERNDRIVE Bravo-I XR, Integrated (1.50:1 Ratio)(Low Water Pick-Up)		1	[1]
NS	0005	5H41310TP	STERNDRIVE Bravo-III XR, Integrated (1.65:1 Ratio)		1	
NS		5H41610TP	STERNDRIVE Bravo-III XR Integrated (2.00:1 Ratio)		1	
NS	0005	5H41610TZ	STERNDRIVE Bravo-III XR Integrated (2.00:1 Ratio) Dual Water Pick-Up	[2A344649] & Below	1	
NS	0005	5H41610UP	STERNDRIVE Bravo III XR 2.00:1 DWP ITS	[2A344650] & Up	1	
NS	0005	5H41310TZ	STERNDRIVE Bravo-III XR Integrated Gas (1.65:1) Dual Water Pick-Up	[2A344649] & Below	1	
NS	0005	5H41310UP	STERNDRIVE Bravo III XR 1.65:1 DWP ITS	[2A344650] & Up	1	

PART NOTES:

[1] - Alternate part numbers:

5E36210TPService Part

5E36210TSProduction

Sterndrive Unit Chart Bravo And Bravo I XR (SportMaster)

Cat.# 90-891749001

Sterndrive Unit Chart Bravo And Bravo I XR (SportMaster)

Ref #	Part Class	Part Number	Description	Comments	Qty	Note
NS		5F36201HH	STERNDRIVE Bravo I XR SM (1.50:1 Ratio) (Long - Standard)	- NOTE: The Complete Bravo I Sportmaster Drive Units Are No Longer Available. Order Driveshaft Housing Assembly 1589-865440H56 And Lower Gear Housing Assembly 1600-883608T33. [0M955633] & Below	1	
NS		5F36202HH	STERNDRIVE Bravo I XR SM (1.50:1 Ratio) (Long - Standard)	[0M955634] THRU [0M975807]	1	
NS		5F36202IH	STERNDRIVE Bravo I XR SM (1.50:1 Ratio) (Long - Standard)	[0M975808] & Up	1	
NS		5G36201HH	STERNDRIVE Bravo I XR SM (1.50:1 Ratio) (Short - Standard)	- NOTE: The Complete Bravo I Sportmaster Drive Units Are No Longer Available. Order Driveshaft Housing Assembly 1589-865440H56 And Lower Gear Housing Assembly 1600-883608T34. [0M955633] & Below	1	
NS		5G36202HH	STERNDRIVE Bravo I XR SM (1.50:1 Ratio) (Short - Standard)	[0M955634] THRU [0M975807]	1	
NS		5G36202IH	STERNDRIVE Bravo I XR SM (1.50:1 Ratio) (Short - Standard)	[0M975808] & Up	1	
NS		5F36211HH	STERNDRIVE Bravo I XR SM (1.50:1 Ratio) (Long - Integrated Transom System)	- NOTE: The Complete Bravo I Sportmaster Drive Units Are No Longer Available. Order Driveshaft Housing Assembly 1589-865440H73 And Lower Gear Housing Assembly 1600-883608T33. [0M955633] & Below	1	
NS		5F36212HH	STERNDRIVE Bravo I XR SM (1.50:1 Ratio) (Long - Integrated Transom System)	[0M955634] THRU [0M975807]	1	
NS		5F36212IH	STERNDRIVE Bravo I XR SM (1.50:1 Ratio) (Long - Integrated Transom System)	[0M975808] & Up	1	
NS		5G36211HH	STERNDRIVE Bravo I XR SM (1.50:1 Ratio) (Short - Integrated Transom System)	- NOTE: The Complete Bravo I Sportmaster Drive Units Are No Longer Available. Order Driveshaft Housing Assembly 1589-865440H73 And Lower Gear Housing Assembly 1600-883608T34. [0M955633] & Below	1	
NS		5G36212HH	STERNDRIVE Bravo I XR SM (1.50:1 Ratio) (Short - Integrated Transom System)	[0M955634] THRU [0M975807]	1	
NS		5G36212IH	STERNDRIVE Bravo I XR SM (1.50:1 Ratio) (Short - Integrated Transom System)	[0M975808] & Up	1	

Cat.# 90-891749001

Sterndrive Unit Chart Bravo And Bravo I XR (SportMaster)

Ref #	Part Class	Part Number	Description	Comments	Qty	Note
NS		5F36801HH	STERNDRIVE Bravo XR SM (1.26:1 Ratio) (Long - Standard)	- NOTE: The Complete Bravo I Sportmaster Drive Units Are No Longer Available. Order Driveshaft Housing Assembly 1589-865440H56 And Lower Gear Housing Assembly 1600-883608T29. [0M955633] & Below	1	
NS		5F36802HH	STERNDRIVE Bravo XR SM (1.26:1 Ratio) (Long - Standard)	[0M955634] & Up	1	
NS		5G36801HH	STERNDRIVE Bravo XR SM (1.26:1 Ratio) (Short - Standard)	- NOTE: The Complete Bravo I Sportmaster Drive Units Are No Longer Available. Order Driveshaft Housing Assembly 1589-865440H56 And Lower Gear Housing Assembly 1600-883608T30. [0M955633] & Below	1	
NS		5G36802HH	STERNDRIVE Bravo XR SM (1.26:1 Ratio) (Short - Standard)	[0M955634] & Up	1	
NS		5F36811HH	STERNDRIVE Bravo XR SM (1.26:1 Ratio) (Long - Integrated Transom System)	- NOTE: The Complete Bravo I Sportmaster Drive Units Are No Longer Available. Order Driveshaft Housing Assembly 1589-865440H73 And Lower Gear Housing Assembly 1600-883608T29. [0M955633] & Below	1	
NS		5F36812HH	STERNDRIVE Bravo XR SM (1.26:1 Ratio) (Long - Integrated Transom System)	[0M955634] & Up	1	
NS		5G36811HH	STERNDRIVE Bravo XR SM (1.26:1 Ratio) (Short - Integrated Transom System)	- NOTE: The Complete Bravo I Sportmaster Drive Units Are No Longer Available. Order Driveshaft Housing Assembly 1589-865440H73 And Lower Gear Housing Assembly 1600-883608T30. [0M955633] & Below	1	
NS		5G36812HH	STERNDRIVE Bravo XR SM (1.26:1 Ratio) (Short - Integrated Transom System)	[0M955634] & Up	1	
NS		5F36901HH	STERNDRIVE Bravo XR SM (1.35:1 Ratio) (Long - Standard)	- NOTE: The Complete Bravo I Sportmaster Drive Units Are No Longer Available. Order Driveshaft Housing Assembly 1589-865440H56 And Lower Gear Housing Assembly 1600-883608T31. [0M955633] & Below	1	
NS		5F36902HH	STERNDRIVE Bravo XR SM (1.35:1 Ratio) (Long - Standard)	[0M955634] THRU [0M975807]	1	
NS		5F36902IH	STERNDRIVE Bravo XR SM (1.35:1 Ratio) (Long - Standard)	[0M975808] & Up	1	

Cat.# 90-891749001

Sterndrive Unit Chart Bravo And Bravo I XR (SportMaster)

Ref #	Part Class	Part Number	Description	Comments	Qty	Note
NS		5G36901HH	STERNDRIVE Bravo XR SM (1.35:1 Ratio) (Short - Standard)	- NOTE: The Complete Bravo I Sportmaster Drive Units Are No Longer Available. Order Driveshaft Housing Assembly 1589-865440H56 And Lower Gear Housing Assembly 1600-883608T32. [0M955633] & Below	1	
NS		5G36902HH	STERNDRIVE Bravo XR SM (1.35:1 Ratio) (Short - Standard)	[0M955634] THRU [0M975807]	1	
NS		5G36902HH	STERNDRIVE Bravo XR SM (1.35:1 Ratio) (Short - Standard)	[0M975808] & Up	1	
NS		5F36911HH	STERNDRIVE Bravo XR SM (1.35:1 Ratio) (Long - Integrated Transom System)	- NOTE: The Complete Bravo I Sportmaster Drive Units Are No Longer Available. Order Driveshaft Housing Assembly 1589-865440H73 And Lower Gear Housing Assembly 1600-883608T31. [0M955633] & Below	1	
NS		5F36912HH	STERNDRIVE Bravo XR SM (1.35:1 Ratio) (Long - Integrated Transom System)	[0M955634] THRU [0M975807]	1	
NS		5F36912IH	STERNDRIVE Bravo XR SM (1.35:1 Ratio) (Long - Integrated Transom System)	[0M975808] & Up	1	
NS		5G36911HH	STERNDRIVE Bravo XR SM (1.35:1 Ratio) (Short - Integrated Transom System)	- NOTE: The Complete Bravo I Sportmaster Drive Units Are No Longer Available. Order Driveshaft Housing Assembly 1589-865440H73 And Lower Gear Housing Assembly 1600-883608T32. [0M955633] & Below	1	
NS		5G36912HH	STERNDRIVE Bravo XR SM (1.35:1 Ratio) (Short - Integrated Transom System)	[0M955634] THRU [0M975807]	1	
NS		5G36912IH	STERNDRIVE Bravo XR SM (1.35:1 Ratio) (Short - Integrated Transom System)	[0M975808] & Up	1	

Transom Assembly Chart

RESOURCE NOTES:

FOR REPLACEMENT OF TRANSOM ASSEMBLY, COMPLETE, WHICH INCLUDES BELL HOUSING, GIMBAL RING, TRIM CYLINDER, ETC.

Cat.# 90-891749001

Transom Assembly Chart

Ref #	Part Class	Part Number	Description	Comments	Qty	Note
-	0006	6311002NZ	TRANSOM ASSEMBLY Magnum		1	
-	0006	6911002TP	TRANSOM ASSEMBLY Bravo (SEACORE)		1	
-	0006	6A15002TP	TRANSOM ASSEMBLY Bravo (SEACORE) SmartCraft		1	
-	0006	6511002NZ	TRANSOM ASSEMBLY Hi Performance Without Sender		1	
-		620000071	TRANSOM ASSEMBLY Hi Performance With Sender; Without Steering Arm	External Steer and X-Haust Compatible	1	
-		620000091	TRANSOM ASSEMBLY Hi Performance With Sender	Axius Compatible	1	
-		6511102NZ	TRANSOM ASSEMBLY Hi Performance With Sender		1	
-		6521002HH	TRANSOM ASSEMBLY Integrated Housing		1	
-		6521002JH	TRANSOM ASSEMBLY Integrated Housing X-Haust Compatible		1	
-	0006	62000005P	TRANSOM Magnum, Bravo SmartCraft, Diesel Ready With Block-off: Without Internal Hose		1	
-	0006	62000006P	TRANSOM Magnum, Bravo SmartCraft SeaCore, Diesel Ready With Block-off: Without Internal Hose		1	

Continuity Kit

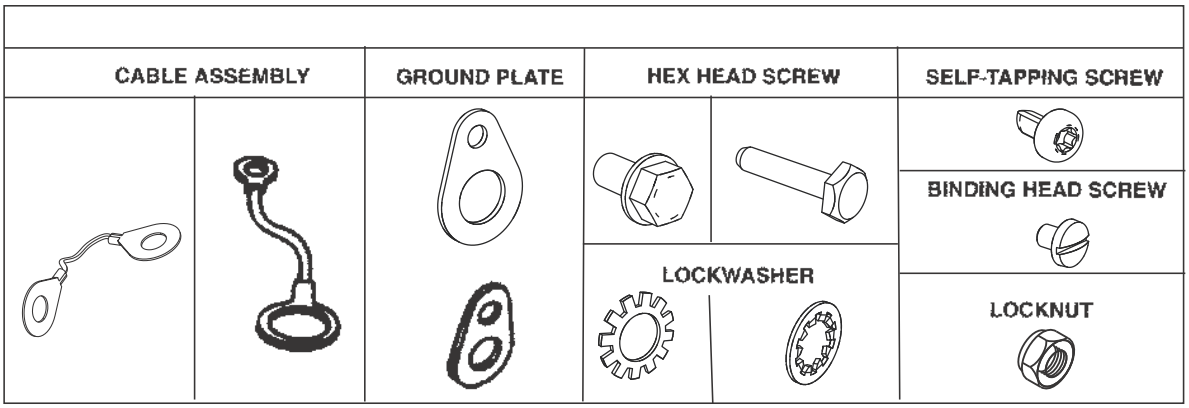

5065

Cat.# 90-891749001

Continuity Kit

Ref #	Part Class	Part Number	Description	Comments	Qty	Note
-	0000	99940A2	CONTINUITY KIT		1	
-	0010	807754	SCREW (#10-24 x .38)		7	
-	0000	847062A1	BONDING KIT		3	
-	0010	24231	SCREW (#10-32 x .250)		1	
-	0010	41508	SCREW (.250-20 x .500) Stainless Steel		1	
-	0010	45862	SCREW (#10-32 x .875)		1	
-	0011	20190	NUT (#10-32)		1	
-	0013	58308	LOCKWASHER Internal (#10)		1	
-	0013	78968	LOCKWASHER Internal (.250)		2	
-	0010	85486	SCREW (.250-20 x .380) Stainless Steel		1	
-	0013	35479	LOCKWASHER (.375)		1	

Transom Plate and Shift Cable

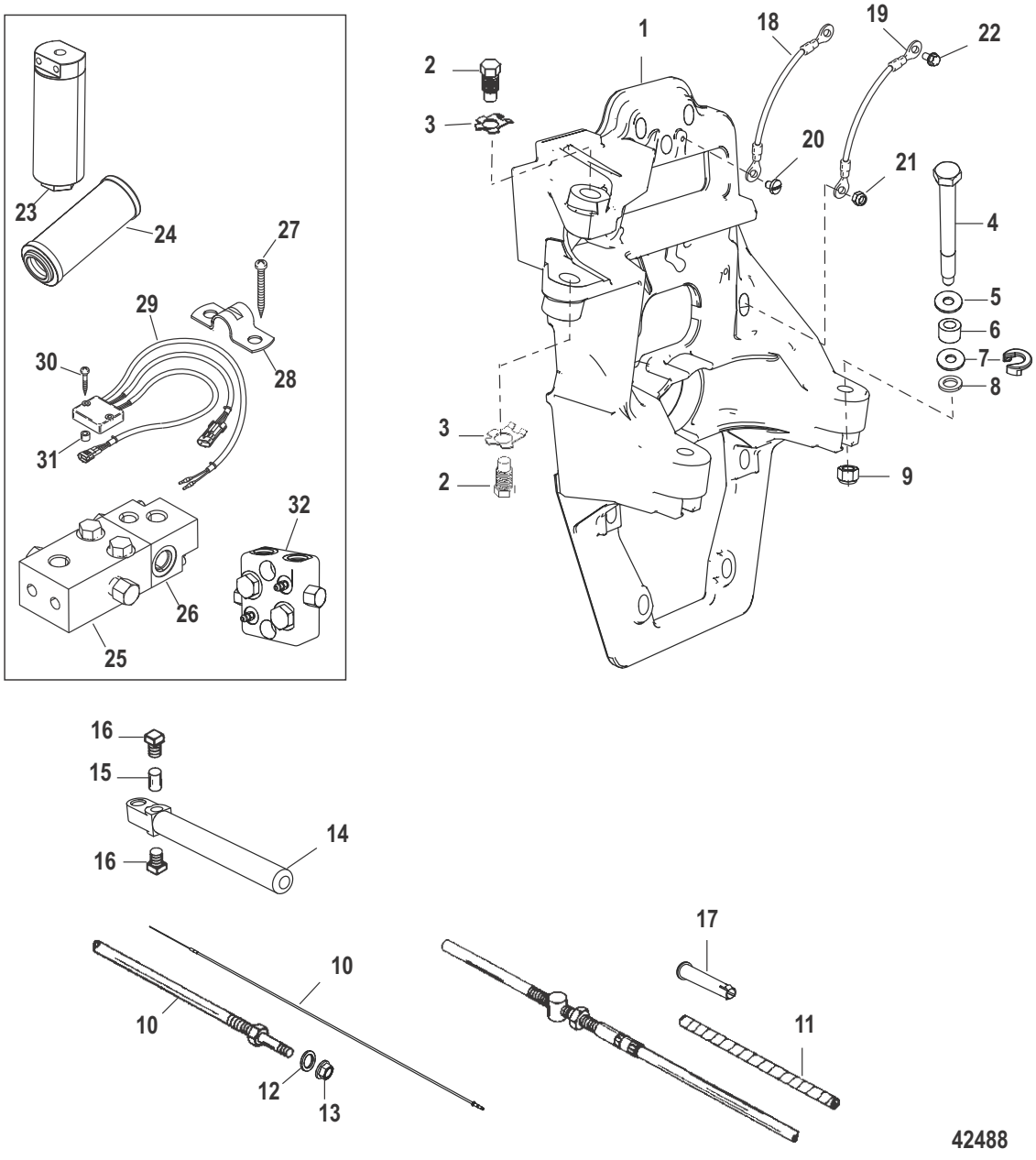

Cat.# 90-891749001

Transom Plate and Shift Cable

Ref #	Part Class	Part Number	Description	Comments	Qty	Note
1	0000	44117A8	PLATE ASSEMBLY Transom	Design I, Non-ITS	1	
1	0000	8M0095951	PLATE ASSEMBLY Transom	Design II, Non-ITS [2A494652] & Below	1	
1	0000	8M0114816	PLATE ASSEMBLY Transom	Design III, Non-ITS [2A494653] & Up	1	
1	0000	44117A12	PLATE ASSEMBLY Transom X-Haust Compatible	- Integrated Transom (ITS) [0M962900] & Up	1	
2	0010	42253	BOLT Pivot		2	
3	0014	42254	WASHER Tab		2	
4	0010	97934	SCREW (.500-20 x 5.370) Special		2	
5	0012	35777	WASHER (.5156 x 1.375 x .125) Aluminum		2	
6	0023	99299	SPACER (.520 x .870 x .630)		2	
7	0012	32834	WASHER (.9375 x 1.750 x .172)	Design I; Non-ITS	2	
7	0012	8M0087162	WASHER (.9375 x 2.15625)	Design II; Non-ITS [2A494652] & Below	2	
7	0000	8M0096564	WASHER Rubber U Shape	Design III; Non-ITS [2A494653] & Up	2	
7	0012	32834	WASHER (.9375 x 1.750 x .172)	- Integrated Transom (ITS) [2A508379] & Below	2	
7	0000	8M0096564	WASHER Rubber U Shape	- Integrated Transom (ITS) [2A508380] & Up	2	
8	0012	54012	WASHER (.530 x .870 x .105) Stainless Steel		AR	
9	0011	863332	NUT (.500-20) Aluminum		2	
10	0000	815471A6	CABLE KIT Shift		1	[1]
11	0000	90412	WRAPPING (1.16 Feet Bulk) Cut As Required		1	
12	0012	815472	WASHER Sealing		1	
13	0011	49910	NUT (.375-24)		1	
-	0000	43433A01	GUIDE KIT		1	
14	0000	43433	GUIDE		1	
15	0000	43436	ANCHOR		1	
16	0010	20518	SET SCREW (#8-32)		2	
17	0000	861632	INSERT		1	
18		NSS	NOT SOLD SEPARATE Grounding Cable Assembly		1	[2]
19		NSS	NOT SOLD SEPARATE Grounding Cable Assembly		1	[2]
20	0010	24231	SCREW (#10-32 x .250)		1	
21	0011	82671015	NUT (.437-20) Stainless Steel		1	
22	0010	41508	SCREW (.250-20 x .500) Stainless Steel		1	
23	0035	841067T1	FILTER ASSEMBLY Power Steering	- Integrated Transom	1	
24	0035	841076	ELEMENT Power Steering Filter	- Integrated Transom	1	
25	0000	840690T	VALVE BLOCK ASSEMBLY	- Intergrated Transom	1	
26	0000	8M8021152	BLOCK ASSEMBLY Adaptor - With Check Valves	- Intergrated Transom [0M962899] & Below	1	
27	0010	57807	SCREW (#10-16 x .750) Stainless Steel	- Integrated Transom	2	

Transom Plate and Shift Cable

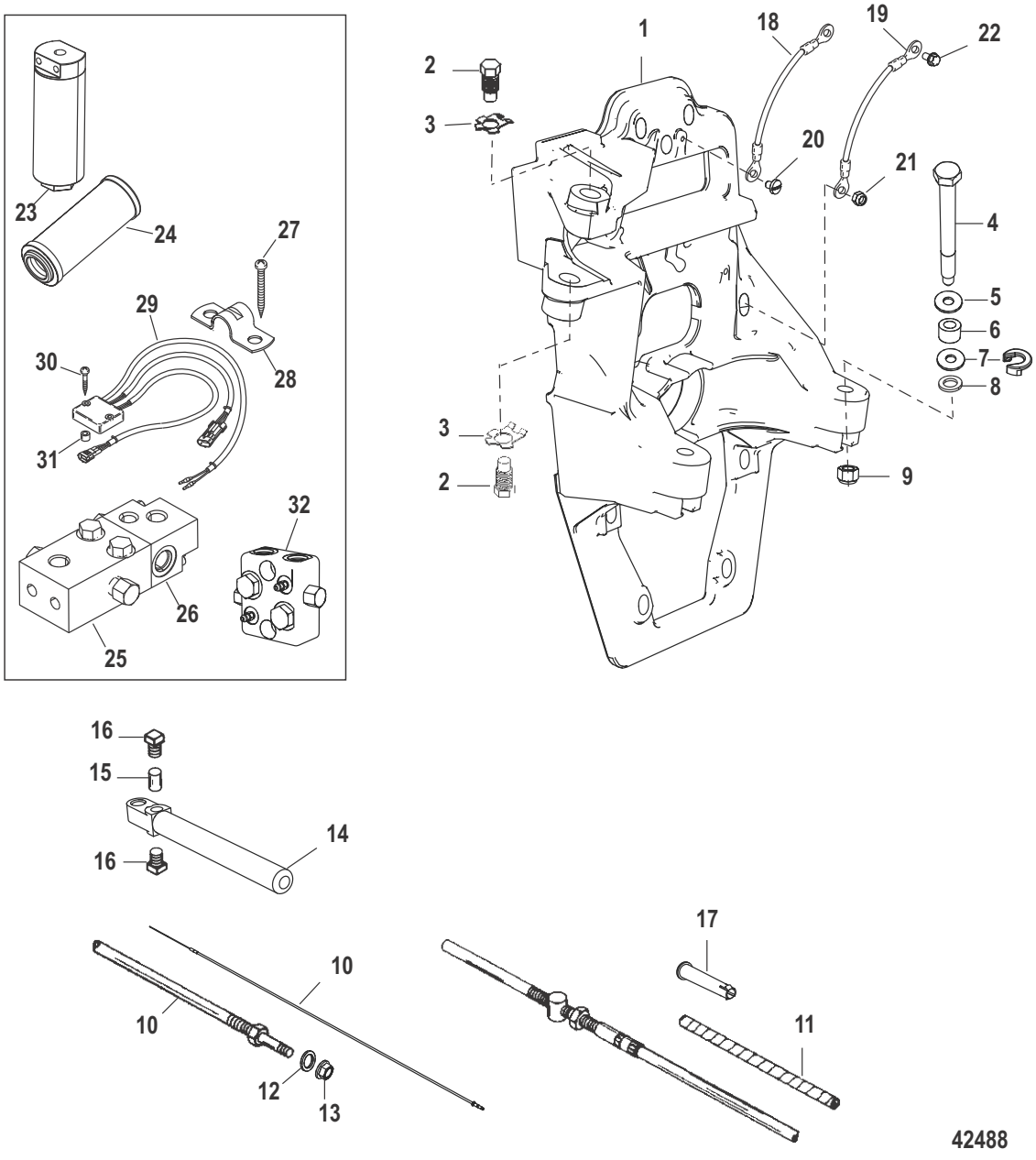

Cat.# 90-891749001

Transom Plate and Shift Cable

Ref #	Part Class	Part Number	Description	Comments	Qty	Note
28	0054	828370	BRACKET	- Integrated Transom	1	
29	0000	884359T1	MODULE ASSEMBLY Gauge Driver	- Integrated Transom	1	
30	0010	818224	SCREW (#12-11 x 1.750)	- Integrated Transom	2	
31	0023	849083	SPACER	- Integrated Transom	2	
32	0000	844399T01	VALVE BLOCK ASSEMBLY	[0M962900] & Up	1	

PART NOTES:

[1] - Alternate part numbers:

815471A 6Service Part

815471T 1Kit

[2] - COMPONENT OF CONTINUITY KIT 99940A 2

Gimbal Housing (2A514802 and Below)

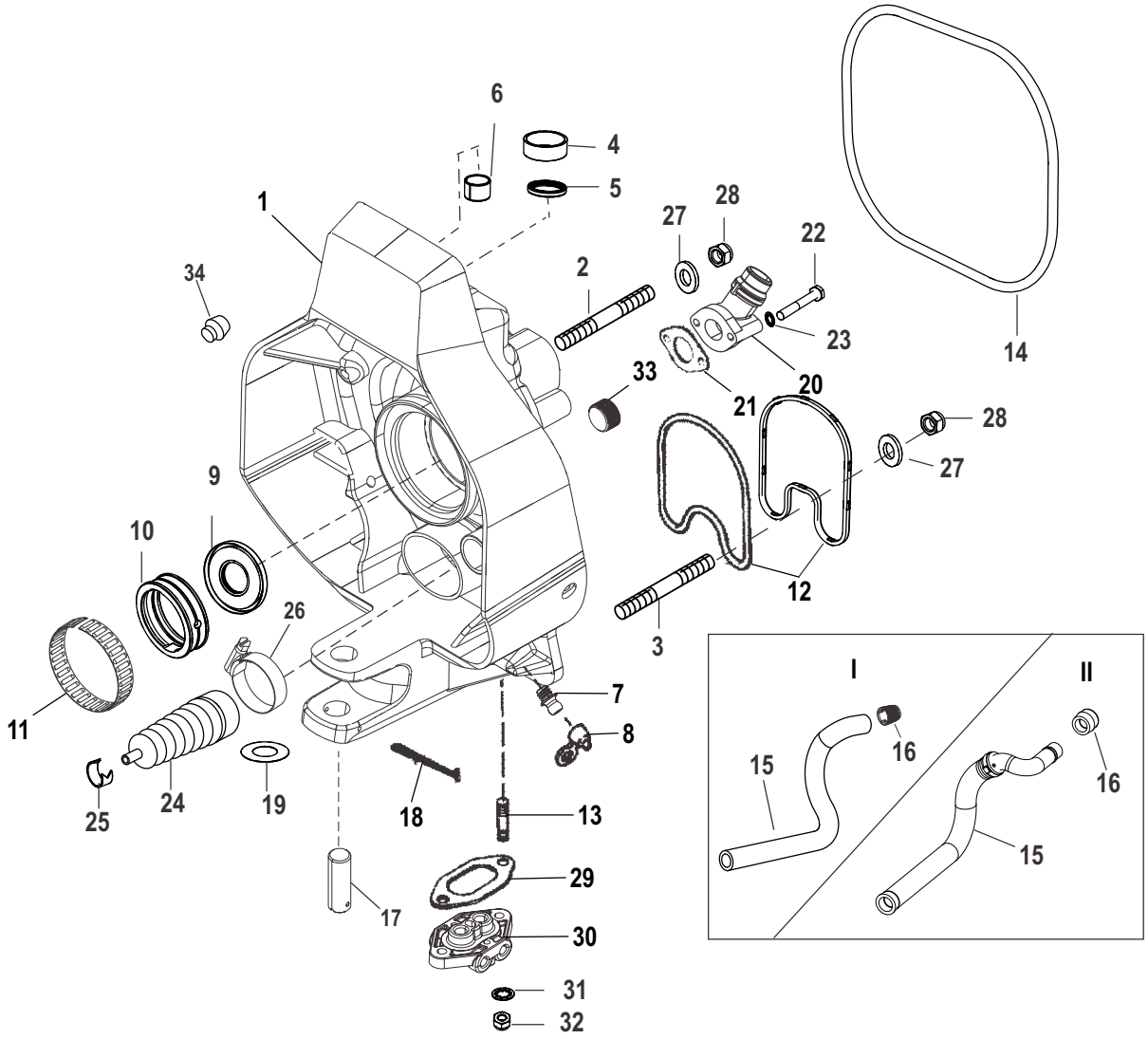

NOTE: FOR CONTINUITY CIRCUIT COMPONENTS, SEE "CONTINUITY KIT"

NOTE: ACCESS HOLE PLUG KIT (22-88847A1) CONTAINS ALL NECESSARY PARTS TO ALLOW REMOVAL OF SWIVEL SHAFT WITHOUT REMOVING GIMBAL HOUSING.

56951

Cat.# 90-891749001

Gimbal Housing (2A514802 and Below)

Ref #	Part Class	Part Number	Description	Comments	Qty	Note
1	0000	43881A17	GIMBAL HOUSING ASSEMBLY		1	
1	0000	866454A02	GIMBAL HOUSING ASSEMBLY	(SEACORE)	1	
2	0016	56296	STUD (.437-20 x 4.750)		4	
2	0016	866562	STUD (.437-20 x 4.750) Stainless Steel	(SEACORE)	4	
3	0016	818834	STUD (.437-20 x 4.250)		4	
3	0016	866563	STUD (.437-20 x 4.250) Stainless Steel	(SEACORE)	4	
4	0023	983571	BUSHING Lower		1	
5	0026	416071	SEAL Oil		1	
5	0026	8M2005029	SEAL		1	
6	0023	98356	BUSHING Upper		1	
7	0022	74036	FITTING Grease	(Use with greased bearing)	1	
7	0010	8M2015913	PLUG (.250-28 x .320)	(Use with non-greased bearing)	1	
8	0019	77633Q	LUBRICAP		1	[1]
9	0026	88416	SEAL Oil		1	
10	0030	862540A3	BEARING ASSEMBLY		1	
11	0000	61075	TOLERANCE RING		1	
12	0000	41802	SEAL Rubber Without Tabs		1	
12		NSS	NOT SOLD SEPARATE Seal With Tabs		1	
13	0016	56766	STUD (.250-20/.250-28 x 1.380)		2	
14	0000	43713	SEAL		1	
15	0032	43437	HOSE Water	Design I	1	
15	0000	8M0062102	HOSE Water	Design II	1	
16	0000	41674	INSERT	Design I	1	
16	0023	8M0057042	INSERT	Design II	1	
17	0017	99353	SWIVEL PIN Lower		1	
18	0018	54929	COTTER PIN		1	
19	0012	32518	WASHER		1	
20	0000	865470	HOUSING Inlet Male Quick Connect		1	
21	0027	441081	GASKET		1	
22	0010	78038	SCREW (.250-20 x 1.75)		2	
22	0010	73015	SCREW (.250-20 x 1.75)		2	
23	0013	21272	LOCKWASHER (.250)		2	
23	0013	78968	LOCKWASHER Internal (.250)		2	
24	0000	74639A2	BELLOWS ASSEMBLY Shift Cable		1	[2]
25	0054	866507	CLAMP		1	
26	0054	815504320	CLAMP Worm Gear		1	
27	0012	34567	WASHER		8	
27	0012	35935	WASHER (.435 x .875 x .105) Stainless Steel		8	
28	0011	82670815	NUT (.437-20)		8	
29	0027	988231	GASKET		1	
30	0000	98825A4	MANIFOLD ASSEMBLY		1	
31	0013	78968	LOCKWASHER Internal (.250)		2	

Gimbal Housing (2A514802 and Below)

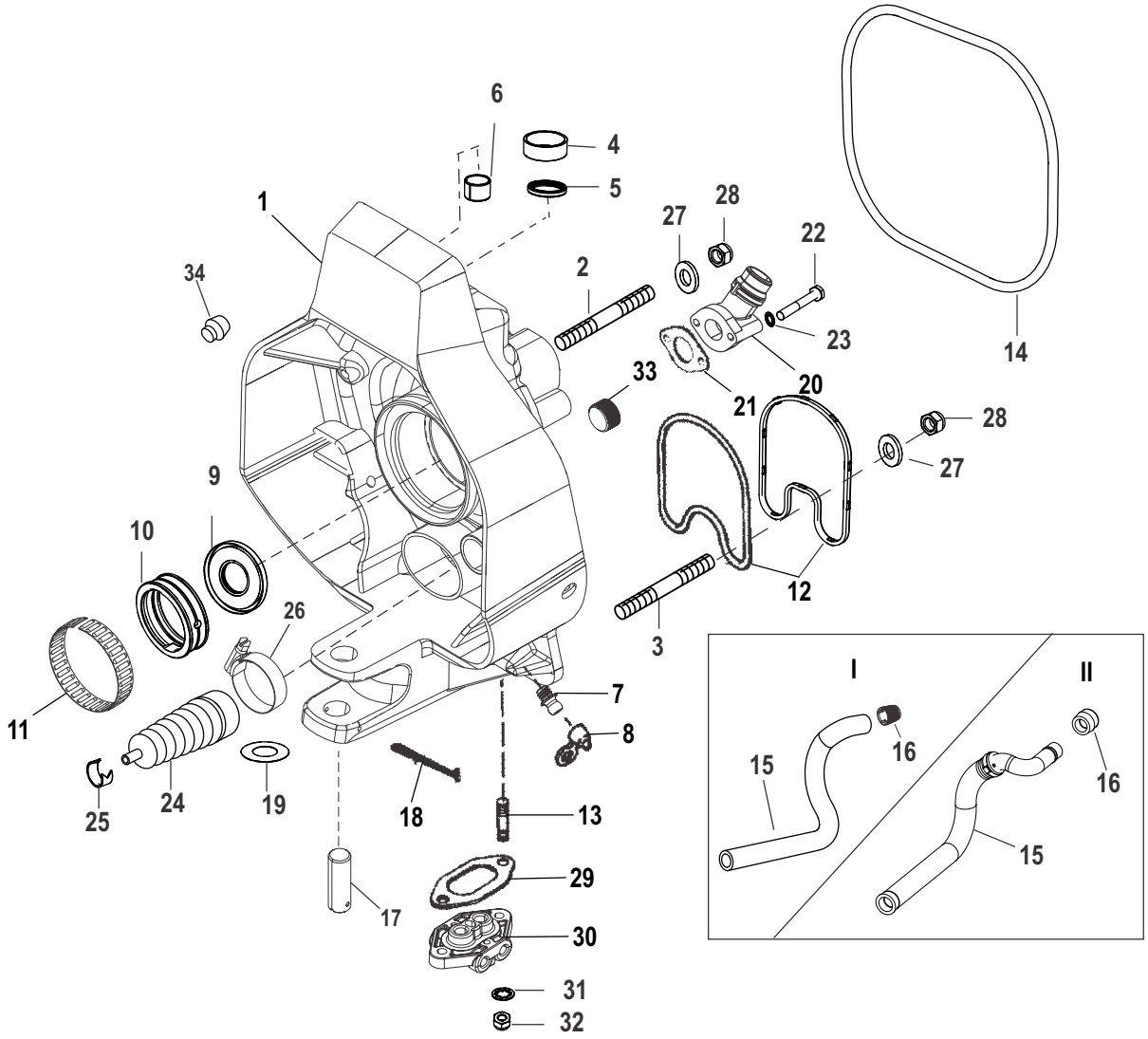

NOTE: FOR CONTINUITY CIRCUIT COMPONENTS, SEE "CONTINUITY KIT"

NOTE: ACCESS HOLE PLUG KIT (22-88847A1) CONTAINS ALL NECESSARY PARTS TO ALLOW REMOVAL OF SWIVEL SHAFT WITHOUT REMOVING GIMBAL HOUSING.

56951

Cat.# 90-891749001

Gimbal Housing (2A514802 and Below)

Ref #	Part Class	Part Number	Description	Comments	Qty	Note
32	0011	8267119	NUT (.250-28)		2	
33	0022	428611	FITTING Pipe - Brass (.750-14)		1	
34	0019	861492	PLUG Trim Switch Wires		1	
-	0022	88847A1	PLUG KIT Access Hole	(Access Hole Plug Kit contains all necessary parts to allow removal of swivel shaft without removing Gimbal Housing)	1	

PART NOTES:

[1] - Alternate part numbers:

77633QQS

77633TMPP

88633Service Part

[2] - Alternate part numbers:

74639A 2Service Part

74639Q02QS

Gimbal Housing Blue Connector (2A514803 and Up)

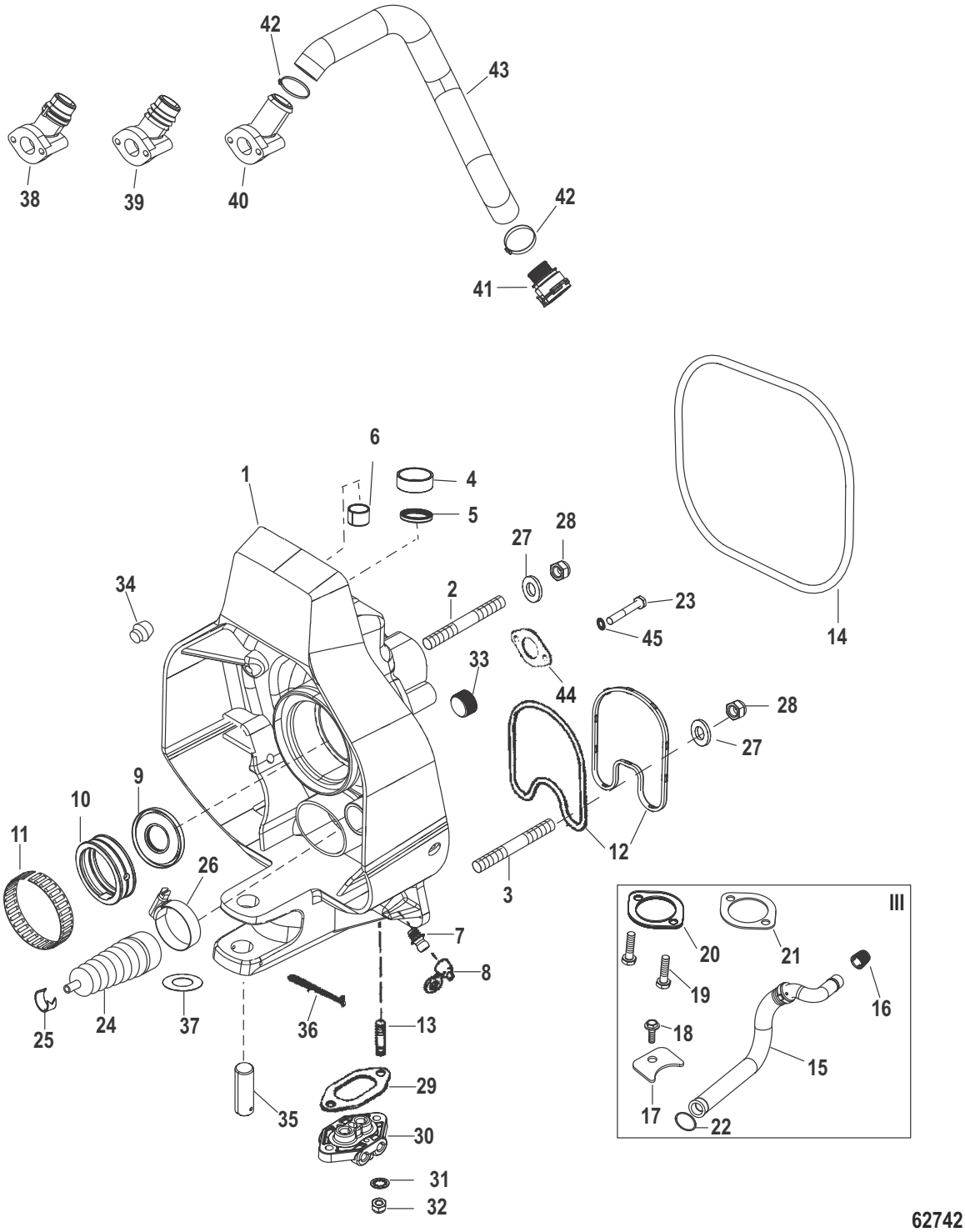

Cat.# 90-891749001

Gimbal Housing Blue Connector (2A514803 and Up)

Ref #	Part Class	Part Number	Description	Comments	Qty	Note
1	0000	8M0096216	GIMBAL HOUSING ASSEMBLY		1	
1	0000	8M0096217	GIMBAL HOUSING ASSEMBLY	(SEACORE)	1	
2	0016	56296	STUD (.437-20 x 4.750)		4	
2	0016	866562	STUD (.437-20 x 4.750) Stainless Steel	(SEACORE)	4	
3	0016	818834	STUD (.437-20 x 4.250)		4	
3	0016	866563	STUD (.437-20 x 4.250) Stainless Steel	(SEACORE)	4	
4	0023	983571	BUSHING Lower		1	
5	0026	416071	SEAL Oil		1	
5	0026	8M2005029	SEAL		1	
6	0023	98356	BUSHING Upper		1	
7	0022	74036	FITTING Grease	(Use with greased bearing)	1	
7	0010	8M2015913	PLUG (.250-28 x .320)	(Use with non-greased bearing)	1	
8	0019	77633Q	LUBRICAP		1	[1]
9	0026	88416	SEAL Oil	Diesel Only	1	
10	0030	862540A3	BEARING ASSEMBLY		1	
11	0000	61075	TOLERANCE RING		1	
12	0000	41802	SEAL Rubber Without Tabs		1	
12		NSS	NOT SOLD SEPARATE Seal With Tabs		1	
13	0016	56766	STUD (.250-20/.250-28 x 1.380)		2	
14	0000	43713	SEAL		1	
15	0032	8M0124395	HOSE ASSEMBLY KIT Water		1	
16	0023	8M0109467	BUSHING Rubber		1	
17	0000	8M0114127	CLAMP		1	
18	0010	8175051	SCREW (.250-20 x .625)		1	
19	0010	76630	SCREW (.250-20 x 1.00)		2	
20	0091	8M0155826	TOOL Water Hose Repair		1	
21	0027	8M0109475	GASKET		1	
22	0025	86614	O-RING (1.049 x .103)		1	
23	0010	78038	SCREW (.250-20 x 1.75)		2	
23	0010	73015	SCREW (.250-20 x 1.75)		2	
24	0000	74639A2	BELLOWS ASSEMBLY Shift Cable		1	[2]
25	0054	866507	CLAMP		1	
26	0054	815504320	CLAMP Worm Gear		1	
27	0012	34567	WASHER		8	
27	0012	35935	WASHER (.435 x .875 x .105) Stainless Steel		8	
28	0011	82670815	NUT (.437-20)		8	
29	0027	988231	GASKET		1	
30	0000	98825A4	MANIFOLD ASSEMBLY		1	
31	0013	78968	LOCKWASHER Internal (.250)		2	
32	0011	8267119	NUT (.250-28)		2	
33	0022	428611	FITTING Pipe - Brass (.750-14)		1	
34	0019	861492	PLUG Trim Switch Wires		1	

Gimbal Housing Blue Connector (2A514803 and Up)

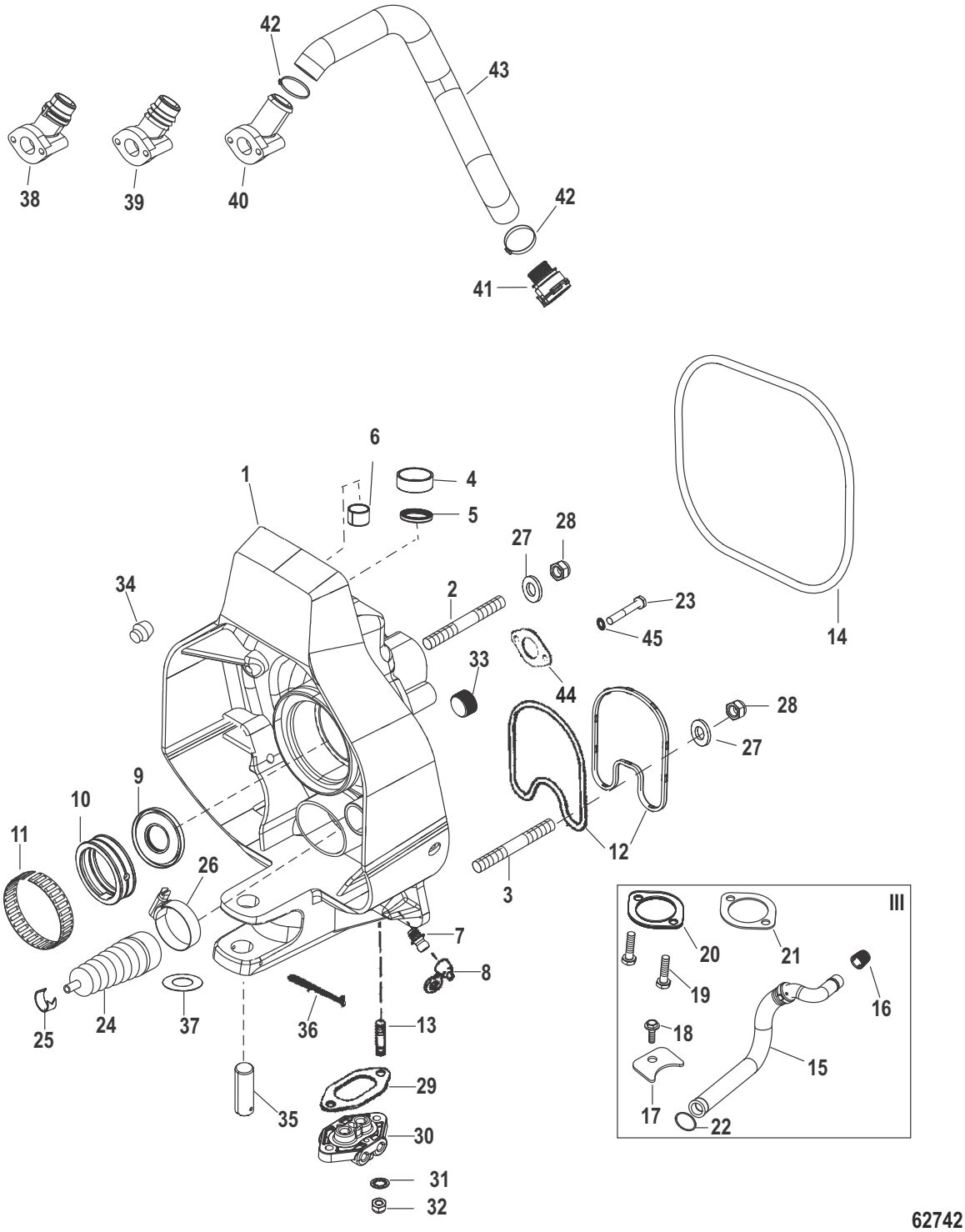

Cat.# 90-891749001

Gimbal Housing Blue Connector (2A514803 and Up)

Ref #	Part Class	Part Number	Description	Comments	Qty	Note
-	0022	88847A1	PLUG KIT Access Hole	(Access Hole Plug Kit contains all necessary parts to allow removal of swivel shaft without removing Gimbal Housing)	1	
35	0017	99353	SWIVEL PIN Lower		1	
36	0018	54929	COTTER PIN		1	
37	0012	32518	WASHER		1	
38	0000	8M0111791	HOUSING Inlet Quick Connect	For Applications with Hose Routing Inside Exhaust Pipe	1	
39	0022	8M0120061	CONNECTOR Hose Barb	For Applications with Hose Routing Inside Exhaust Pipe	1	
40	0000	8M0114793	HOUSING Inlet Bib	For Applications with Hose Routing Outside Exhaust Pipe	1	
41	0022	865324	QUICK CONNECT	Quick Connect Applications	1	
42	0054	8M0141781	CLAMP (44)		2	
43	0032	8M0109511	HOSE	For Applications with Hose Routing Outside Exhaust Pipe	1	
44	0027	8M0109475	GASKET		1	
45	0013	21272	LOCKWASHER (.250)		2	
45	0013	78968	LOCKWASHER Internal (.250)		2	

PART NOTES:

[1] - Alternate part numbers:

77633QQS

77633TMPP

88633Service Part

[2] - Alternate part numbers:

74639A 2Service Part

74639Q02QS

Gimbal Housing (Integrated Transom)

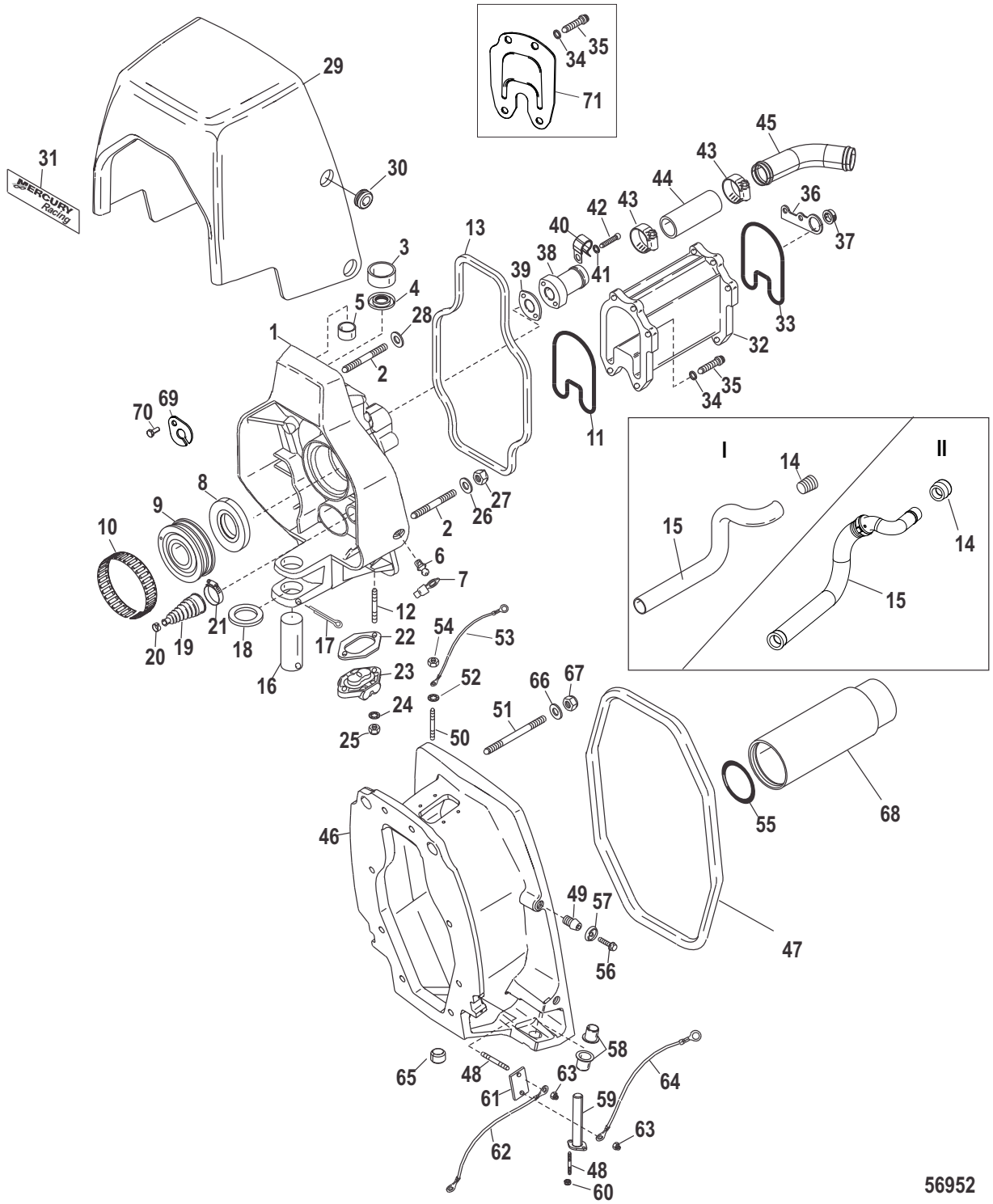

Cat.# 90-891749001

Gimbal Housing (Integrated Transom)

Ref #	Part Class	Part Number	Description	Comments	Qty	Note
1	0000	43881A18	GIMBAL HOUSING ASSEMBLY		1	
2	0016	57984	STUD (.437-14/.437-20 x 2.380)		8	
3	0023	983571	BUSHING Lower		1	
4	0026	416071	SEAL Oil		1	
5	0023	98356	BUSHING Upper		1	
6	0022	74036	FITTING Grease		1	
7	0019	77633Q	LUBRICAP		1	[1]
8	0026	88416	SEAL Oil		1	
9	0030	862540A3	BEARING ASSEMBLY		1	
10	0000	61075	TOLERANCE RING		1	
11	0000	41802	SEAL Rubber		1	
12	0016	56766	STUD (.250-20/.250-28 x 1.380)		2	
13	0000	43713	SEAL		1	
14	0000	41674	INSERT	Design I	1	
14	0023	8M0057042	INSERT	Design II	1	
15	0032	43437	HOSE	Design I	1	
15	0000	8M0062102	HOSE	Design II	1	
16	0017	99353	SWIVEL PIN Lower		1	
17	0018	54929	COTTER PIN		1	
18	0012	32518	WASHER		1	
19	0000	74639A2	BELLOWS ASSEMBLY Shift Cable		1	[2]
20	0054	38863	CLAMP		1	
21	0054	815504320	CLAMP Worm Gear		1	
22	0027	988231	GASKET		1	
23	0000	98825A13	COVER KIT		1	
24	0013	78968	LOCKWASHER Internal (.250)		2	
25	0011	8267119	NUT (.250-28)		2	
26	0012	35935	WASHER (.435 x .875 x .105) Stainless Steel		8	
27	0011	82671015	NUT (.437-20) Stainless Steel		8	
28	0012	840848	WASHER		2	
29	0000	840493T1	COWL ASSEMBLY Transom		1	
30	0025	840840	GROMMET		4	
31	0037	840359	DECAL Mercury Racing	[0M975807] & Below	1	
31	0037	8M0121133	DECAL Mercury	[0M975808] & Up	1	
32	0000	840693A2	PLATE KIT Exhaust Extension	[0M962899] & Below	1	
33	0000	41802	SEAL Rubber	[0M962899] & Below	1	
34	0013	41471	LOCKWASHER (.375)		A/R	
35	0010	58640	SCREW (.375-16 x 1.25)		A/R	
36	0000	840842	BRACKET		1	
37	0023	840847	BUSHING Snap		1	
38	0022	840688	CONNECTOR	Use With Design-I Hose and Grommet	1	
38	0022	8M0111793	CONNECTOR	Use With Design-II Hose and Grommet	1	
39	0027	441081	GASKET		1	
40	0054	642351	J CLIP	Design I only	1	

Gimbal Housing (Integrated Transom)

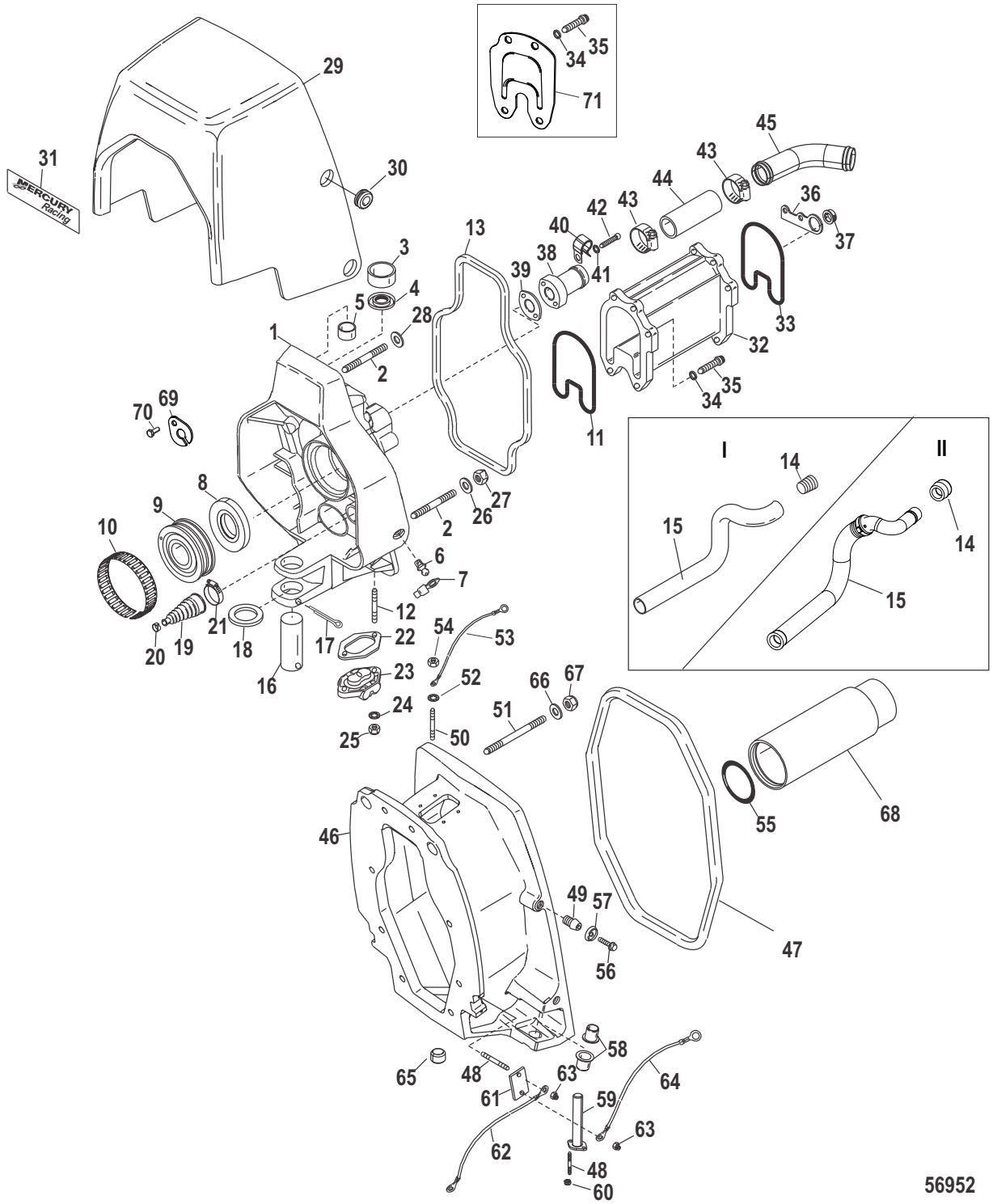

Cat.# 90-891749001

Gimbal Housing (Integrated Transom)

Ref #	Part Class	Part Number	Description	Comments	Qty	Note
41	0013	78968	LOCKWASHER Internal (.250)		2	
42	0010	816742	SCREW (.250-20 x 1.250)		2	
43	0054	180766	CLAMP Worm Gear		2	
44	0032	5346170	HOSE (48.00 Inches Bulk) (5.00 Inches)		1	
45	0022	840831	TUBE (60 Degree)		1	
46	0000	840496A3	BOX ASSEMBLY Transom		1	
47	0000	437131	SEAL		1	
48	0016	846345	STUD (#10-32 x .750)		8	
49	0016	840884	STUD		4	
50	0016	72809	STUD (.250-20/.250-28 x 1.620)		3	
50	0016	843125	STUD (.250-20 x 2.02) Bonding Strap		1	
51	0016	866562	STUD (.437-20 x 4.750) Stainless Steel		4	
51	0016	866563	STUD (.437-20 x 4.250) Stainless Steel		4	
52	0013	93702	WASHER (.250 External Star) Bonding Strap Stud		1	
53	0000	88238A20	CABLE ASSEMBLY Ground Strap (6.750 Inches)		1	
54	0011	8267098	NUT (.250-20) Stainless Steel Bonding Strap Stud		1	
55	0025	94926	O-RING (2.489 x .070)		1	
56	0010	901921	SCREW (.250-20 x .750) Stainless Steel With Nylon Patch		4	
57	0012	840841	WASHER		4	
58	0023	8159501	BUSHING		4	
59	0000	840739	PIN		2	
60	0011	8267096	NUT (#10-32) Stainless Steel		4	
61	0000	840801	PLATE		2	
62	0000	88238A7	CABLE ASSEMBLY Ground Strap (3.160 Inches)		2	
63	0011	8267096	NUT (#10-32) Stainless Steel		4	
64	0000	88238A20	CABLE ASSEMBLY Ground Strap (6.750 Inches)		1	
65	0022	35052	PLUG Pipe (.250-18 x .375) Pipe		1	
66	0012	34567	WASHER		8	
67	0011	82670815	NUT (.437-20)		8	
68	0000	840689T	TUBE Extension		1	
69	0054	12078	CLAMP		1	
70	0010	28635	SCREW (.250-20 x .620) Stainless Steel		1	
71	0000	861776A2	PLATE KIT	[0M962900] & Up	1	

Gimbal Housing (Integrated Transom)

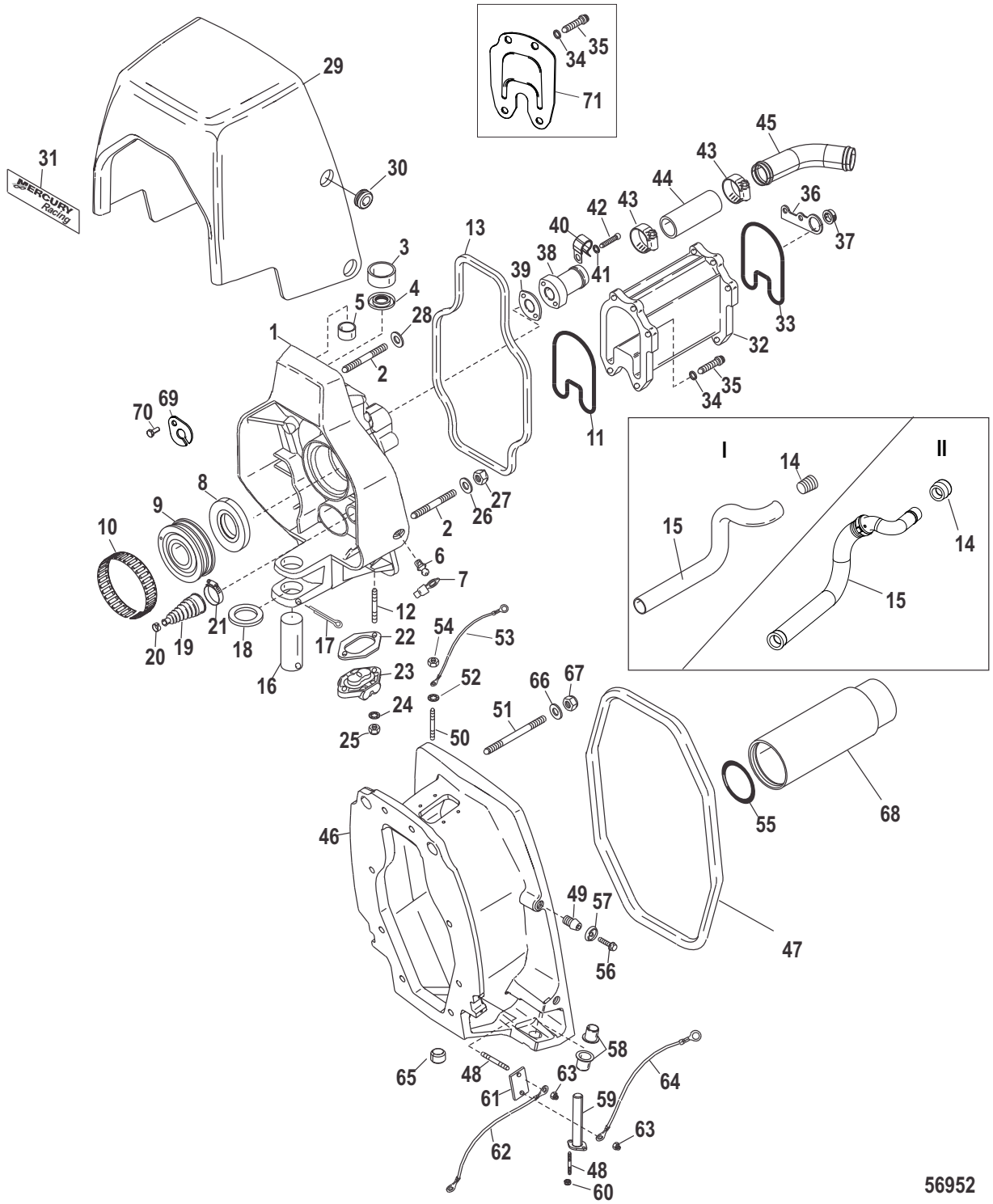

Cat.# 90-891749001

Gimbal Housing (Integrated Transom)

PART NOTES:

[1] - Alternate part numbers:

77633QQS

77633TMPP

88633Service Part

[2] - Alternate part numbers:

74639A 2Service Part

74639Q02QS

Gimbal Ring and Steering Lever

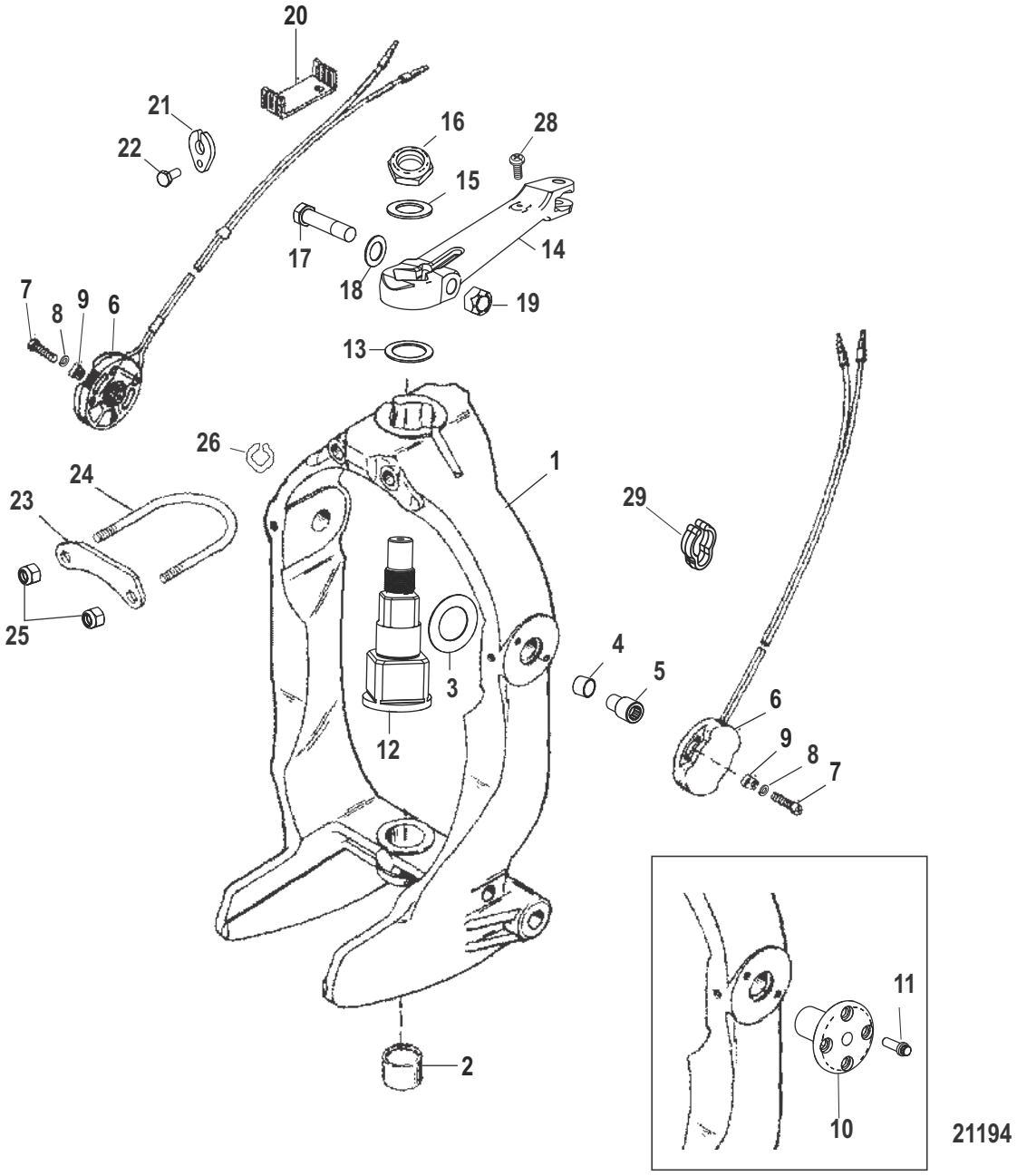

Cat.# 90-891749001

Gimbal Ring and Steering Lever

Ref #	Part Class	Part Number	Description	Comments	Qty	Note
1	0000	822374A4	GIMBAL RING ASSEMBLY	(Magnum Transom)(SmartCraft) [0W465664] & Below	1	
1	0000	822374A3	GIMBAL RING ASSEMBLY	(Hi Performance With Or Without Trim Sender) [0W168455] & Below	1	
1	0000	822374A14	GIMBAL RING ASSEMBLY	(Magnum Transom)(SmartCraft) [0W465665] & Up	1	
1	0000	866456A01	GIMBAL RING ASSEMBLY	(Magnum Transom)(SEACORE)	1	
1	0000	822374A17	GIMBAL RING ASSEMBLY	(Hi Performance With Or Without Trim Sender) [0W168456] & Up	1	
2	0023	847638	BUSHING		1	
3	0012	41721	WASHER		2	
4	0023	847637	BUSHING	(Magnum Transom Only)	2	
5	0010	86801	SCREW Hinge Pin	(Magnum Transom)	2	
6	0000	805320A1	SWITCH ASSEMBLY Trim Sender/Trim Limit	(Magnum Series Transom) (SmartCraft with Analog Gauges)	1	
NS	0000	805134A4	ROTOR KIT Trim Sender	(For Use With Magnum Trim Sender)	AR	
7	0010	37978	SCREW (#10-32 x .750) Stainless Steel	(Magnum Transom)	4	
8	0013	26996	LOCKWASHER (#10) Stainless Steel	(Magnum Transom)	4	
9	0000	57008	RETAINER	(Magnum Transom)	4	
10	0000	8219971	PIN Hinge	(Hi Performance)	2	
11	0010	840907	SCREW (.250-20 x .750)	(Hi Performance)	8	
12	0000	98230A1	SHAFT ASSEMBLY Upper Swivel		1	
12	0000	866718A01	SHAFT ASSEMBLY Upper Swivel	SEACORE	1	
13	0012	98548	WASHER (1.125)		1	
14	0000	98262A1	LEVER ASSEMBLY Steering		1	
15	0012	85344	WASHER (.750 Inside Diameter)		1	
16	0011	82671323	NUT (.750-16)		1	
17	0010	807204	SCREW (.437-20 x 2.00)		1	
18	0012	861854	WASHER (.453 x .750 x .032) Stainless Steel		1	
19	0011	8M2008293	NUT (.437-20)		1	
20	0000	79146	RETAINER		1	
21	0054	12078	CLAMP		1	
22	0010	28635	SCREW (.250-20 x .620) Stainless Steel		1	
23	0000	816510T	BRACKET		1	
24	0010	805164	U BOLT	(Magnum Transom)(SmartCraft) [0W465664] & Below	1	
24	0010	805164	U BOLT	(Hi Performance With Or Without Trim Sender) [0W168455] & Below	1	

Gimbal Ring and Steering Lever

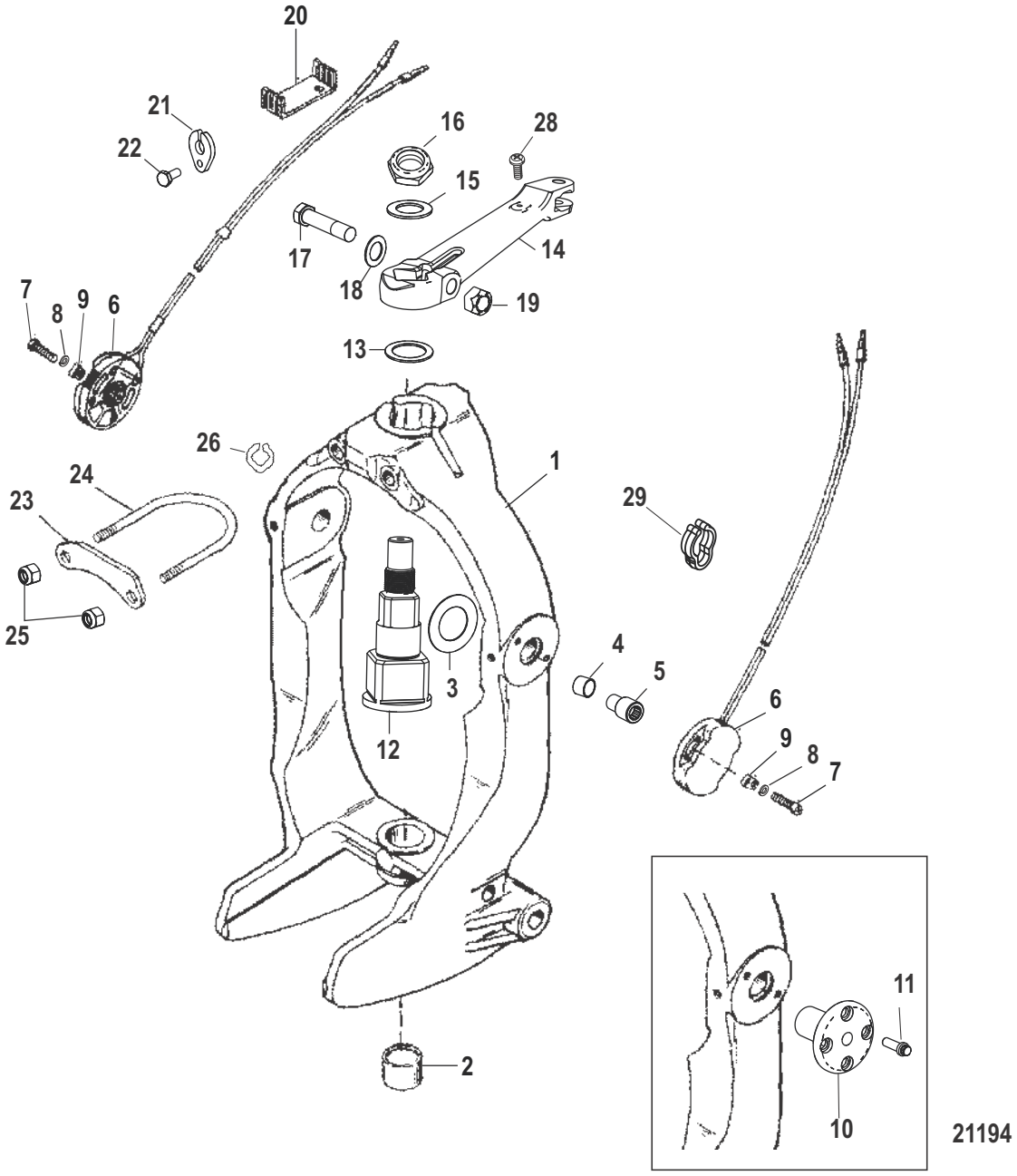

Cat.# 90-891749001

Gimbal Ring and Steering Lever

Ref #	Part Class	Part Number	Description	Comments	Qty	Note
24	0010	866324	U BOLT	(Magnum Transom)(SmartCraft) [0W465665] & Up	1	
24	0010	866324	U BOLT	(Hi Performance With Or Without Trim Sender) [0W168456] & Up	1	
25	0011	862903	NUT (.375-24)	(Magnum Transom)(SmartCraft) [0W465664] & Below	2	
25	0011	862903	NUT (.375-24)	(Hi Performance With Or Without Trim Sender) [0W168455] & Below	2	
25	0011	859116	NUT (.437-20)	(Magnum Transom)(SmartCraft) [0W465665] & Up	2	
25	0011	34933	NUT (.437-20) Stainless Steel	(Magnum Transom)(SEACORE)	2	
25	0011	859116	NUT (.437-20)	(Hi Performance With Or Without Trim Sender) [0W168456] & Up	2	
26	0054	818557	CLAMP		1	
28	0010	45742	SCREW (.190-32 x .312)		1	
28	0010	807754	SCREW (#10-24 x .38)		1	
29	0054	818557001	CLAMP		1	
NS	0000	805130A6	SENDER KIT Dual Station		1	

Gimbal Ring (Integrated Transom)

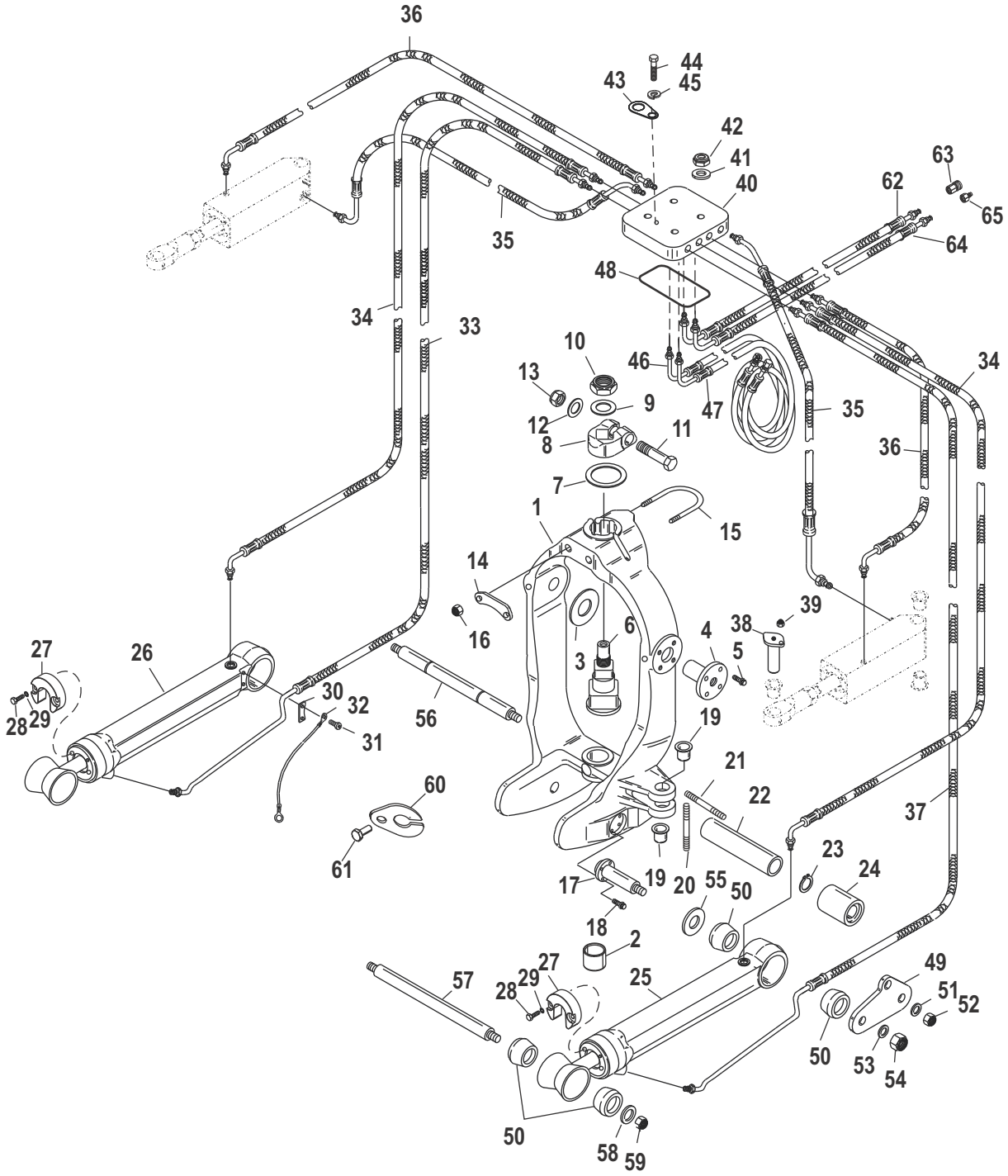

Cat.# 90-891749001

Gimbal Ring (Integrated Transom)

Ref #	Part Class	Part Number	Description	Comments	Qty	Note
1	0000	840532A1	GIMBAL RING ASSEMBLY		1	
2	0023	847638	BUSHING		1	
3	0012	41721	WASHER		2	
4	0000	8219971	PIN Hinge 4 Bolt Design		2	
5	0010	840907	SCREW (.250-20 x .750)		8	
6	0000	98230A1	SHAFT ASSEMBLY Swivel		1	
6	0000	866718A01	SHAFT ASSEMBLY Swivel, Anodized		1	
7	0012	98548	WASHER (1.125)		1	
8	0000	98262T1	CLAMP Top Pin		1	
9	0012	85344	WASHER (.750 Inside Diameter)		1	
10	0011	82671323	NUT (.750-16)		1	
11	0010	807204	SCREW (.437-20 x 2.00)		1	
12	0012	861854	WASHER (.453 x .750 x .032) Stainless Steel		1	
13	0011	98533	NUT (.437-20)		1	
14	0000	816510T	BRACKET		1	
15	0010	805164	U BOLT		1	
16	0011	862903	NUT (.375-24)		2	
17	0000	840728	PIN Mounting Trim Cylinder		2	
18	0010	840907	SCREW (.250-20 x .750)		8	
19	0023	8159501	BUSHING		4	
20	0016	15093	STUD (#10-32 x 1.00)		2	
21	0016	57982	STUD (.437-14/.437-20 x 1.875)		2	
22	0023	840803	SPACER		1	
23	0053	805272	RING Retaining		2	
24	0023	840802	SPACER		2	
25	0000	98704A29	TRIM CYLINDER ASSEMBLY Starboard	(See Power Trim Cylinder Repair Kits for Breakdown)	1	
26	0000	98703A29	TRIM CYLINDER ASSEMBLY Port	(See Power Trim Cylinder Repair Kits for Breakdown)	1	
27	0097	806189T1	ANODE ASSEMBLY		2	[1]
28	0010	806290	SCREW (#10-32 x .625)		4	
29	0013	69432	LOCKWASHER External (#10)		4	
NS	0000	87399A2	OVERHAUL KIT	[2A480243] & Below	2	
NS	0025	87400A2	SEAL KIT	[2A480243] & Below	2	
30	0000	85060	PLATE		2	
31	0010	85486	SCREW (.250-20 x .380) Stainless Steel		4	
32	0000	88238A13	CABLE ASSEMBLY Ground		2	
33	0032	840557	HOSE Trim Cylinder Port		1	
34	0032	840555	HOSE Hydraulic		2	
35	0032	840552	HOSE Hydraulic		2	
36	0032	840554	HOSE Hydraulic		2	
37	0032	840556	HOSE Trim Cylinder Starboard		1	
38	0000	840832	PIN		2	
39	0011	8267096	NUT (#10-32) Stainless Steel		2	

Gimbal Ring (Integrated Transom)

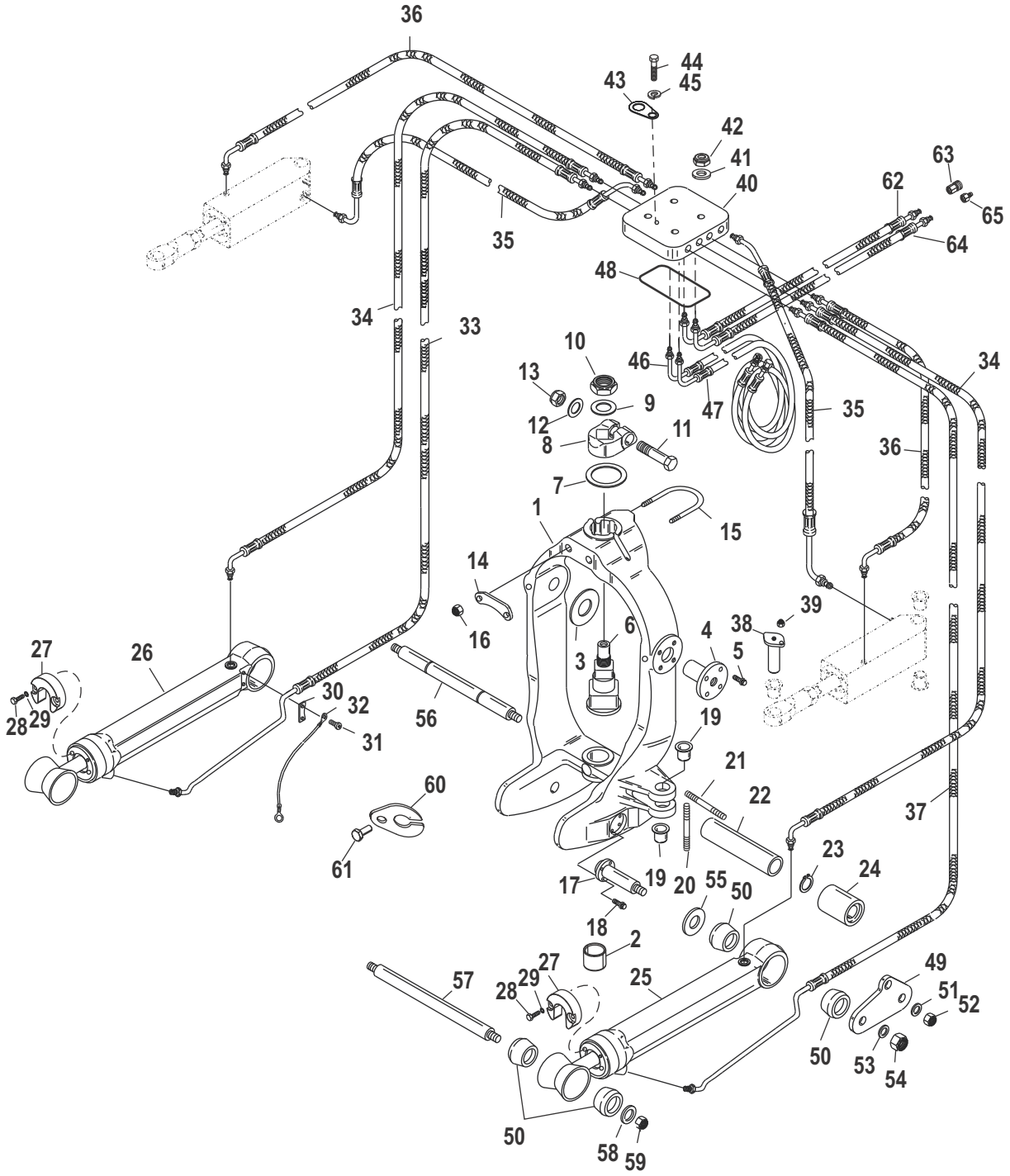

6544

Cat.# 90-891749001

Gimbal Ring (Integrated Transom)

Ref #	Part Class	Part Number	Description	Comments	Qty	Note
40	0000	840691	BLOCK		1	
41	0012	846673	WASHER (.265 x .500 x .060) Stainless Steel		3	
42	0011	826709109	NUT (.250-28) Stainless Steel		4	
43	0000	847022	PLATE		1	
44	0010	68513	SCREW (#10-32 x .375) Stainless Steel		1	
45	0013	69432	LOCKWASHER External (#10)		1	
46	0032	840657	HOSE ASSEMBLY Black Hydraulic		1	
47	0032	840692	HOSE ASSEMBLY Gray Hydraulic		1	
48	0025	805732	O-RING (2.612 x .103)		2	
49	0000	840744	PLATE		2	
50	0023	807073	BUSHING		4	
51	0012	842922	WASHER (.450 x .750 x .060) Stainless Steel		4	
52	0011	82671015	NUT (.437-20) Stainless Steel		4	
53	0012	49339	WASHER (.8125)		2	
54	0011	35000	NUT (.500-20) Stainless Steel		2	
55	0012	44164	WASHER		2	
56	0017	44167A1	PIN		1	
57	0017	44166	PIN		1	[2]
58	0012	44163	WASHER (.450 x 1.75 x .12)		1	
59	0011	859116	NUT (.437-20)		1	
60	0054	12078	CLAMP		1	
61	0010	28635	SCREW (.250-20 x .620) Stainless Steel		1	
62	0032	840656	HOSE Hydraulic	[0M962899] & Below	1	
62	0032	8M0041852	HOSE Hydraulic	[0M962900] & Up	1	
63	0022	865410001	FITTING Female Quick Connect	[0M962899] & Below	1	
63	0000	8M0042488	FITTING	[0M962900] & Up	1	
64	0032	840656	HOSE Hydraulic	[0M962899] & Below	1	
64	0032	8M0041852	HOSE Hydraulic	[0M962900] & Up	1	
65	0022	865411001	FITTING Male Quick Connect	[0M962899] & Below	1	
65	0000	8M0042488	FITTING	[0M962900] & Up	1	

PART NOTES:

[1] - Alternate part numbers:

806189A 1Service Part

806189A 2Magnesium

806189Q 1QS

806189T 1MPP

8M0059341Bulk Pack

[2] - Alternate part numbers:

44166Service Part

44166T 1Kit

Bell Housing (2A514802 and Below)

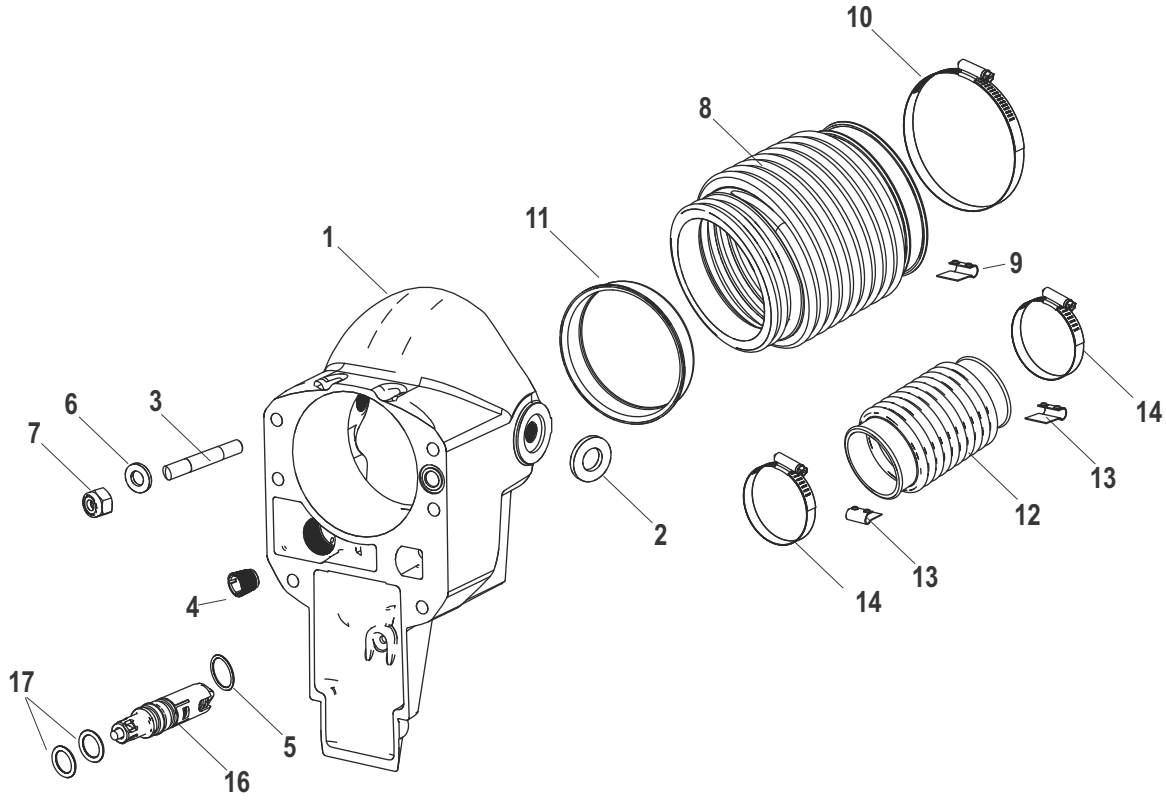

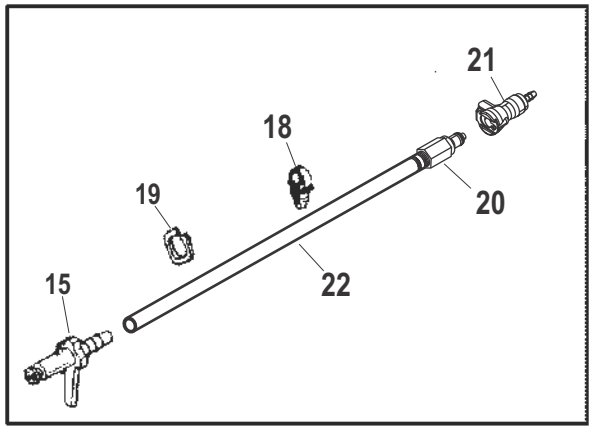

NOTE: FOR CONTINUITY CIRCUIT COMPONENTS, SEE "CONTINUITY KIT"

Cat.# 90-891749001

Bell Housing (2A514802 and Below)

Ref #	Part Class	Part Number	Description	Comments	Qty	Note
1	0000	41646A9	BELL HOUSING ASSEMBLY		1	
1	0000	866457A01	BELL HOUSING ASSEMBLY	(SEACORE)	1	
2	0012	806241	WASHER		2	
3	0016	59579	STUD (.437-14/.437-20 x 2.812)		6	
4	0000	41674	INSERT		1	
5	0025	62705	O-RING		1	
6	0012	35935	WASHER (.435 x .875 x .105) Stainless Steel		6	
7	0011	859116	NUT (.437-20)		6	
7	0011	34933	NUT (.437-20) Stainless Steel		6	
8	0000	86840A3	BELLOWS ASSEMBLY Universal Joint		1	
9	0054	86049	CLIP Grounding		1	
10	0054	815504372	CLAMP Worm Gear		1	
11	0000	862209	SLEEVE		1	
12	0000	18654A1	BELLOWS ASSEMBLY Exhaust		AR	
12	0000	78458A1	TUBE		AR	
13	0054	86049	CLIP Grounding		2	
14	0054	815504348	CLAMP Worm Gear		2	
15	0000	815303	ADAPTER		1	
16	0000	18920A1	VALVE ASSEMBLY	(Use With Oil Reservoir)	1	
17	0025	48171	O-RING (.364. x .070)	(Use With Oil Reservoir)	2	
18	0054	12994	CLIP		1	
19	0054	818557	CLAMP		2	
20	0000	865391	FITTING ASSEMBLY Speedometer Male Quick Connect		1	
21	0022	865417	FITTING Female Quick Connect		1	
22	0032	5495025	TUBING (25.00 Feet Bulk)		1	

Bell Housing Blue Connector (2A514803 and Up)

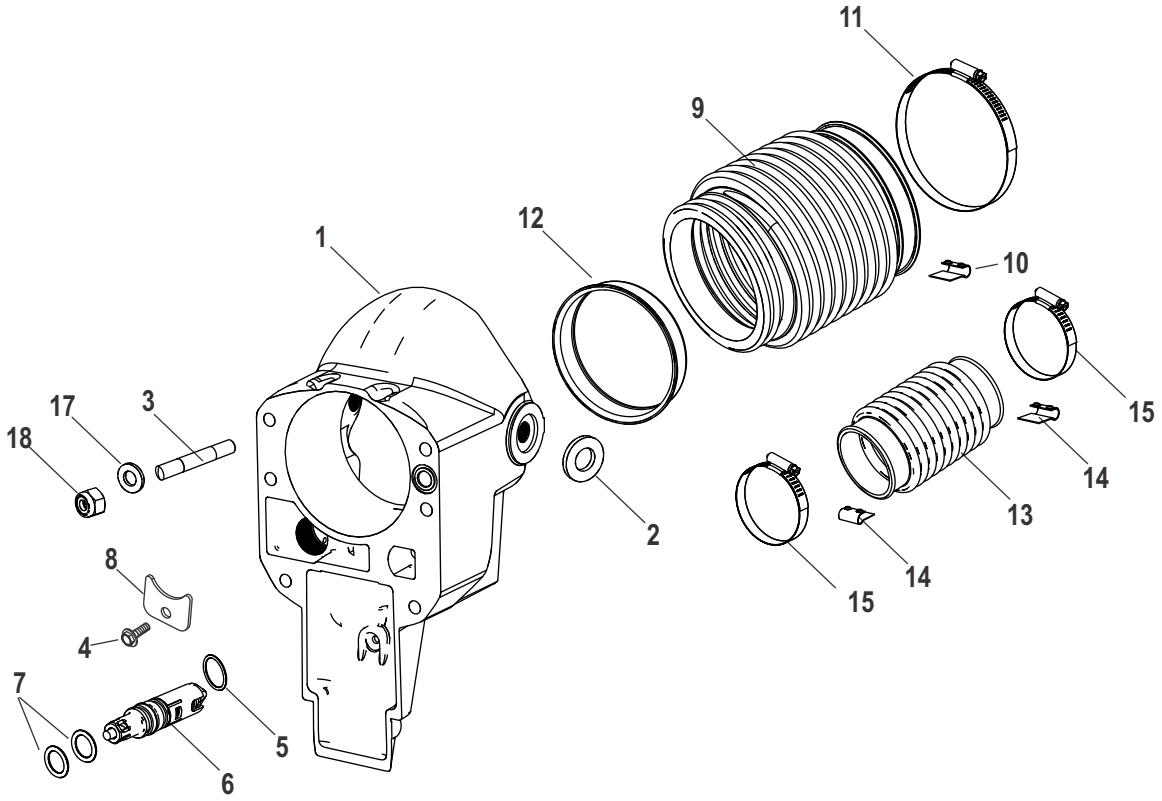

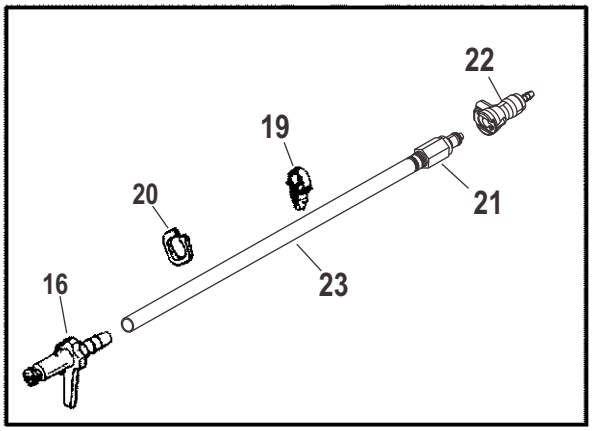

62725

Cat.# 90-891749001

Bell Housing Blue Connector (2A514803 and Up)

Ref #	Part Class	Part Number	Description	Comments	Qty	Note
1	0000	8M0119239	BELL HOUSING ASSEMBLY		1	
1	0000	8M0119240	BELL HOUSING ASSEMBLY	(SEACORE)	1	
1	0000	8M0156390	BELL HOUSING ASSEMBLY	(HP)	1	
1	0000	8M0156419	BELL HOUSING ASSEMBLY	(HP - SEACORE)	1	
2	0012	806241	WASHER		2	
3	0016	59579	STUD (.437-14/.437-20 x 2.812)		6	
4	0010	8175051	SCREW (.250-20 x .625)		1	
5	0025	62705001	O-RING		1	
6	0000	18920A1	VALVE ASSEMBLY	(Use With Oil Reservoir)	1	
7	0025	48171	O-RING (.364. x .070)	(Use With Oil Reservoir)	2	
8	0000	8M0114127	CLAMP		1	
9	0000	86840A3	BELLOWS ASSEMBLY Universal Joint		1	
10	0054	86049	CLIP Grounding		1	
11	0054	815504372	CLAMP Worm Gear		1	
12	0000	862209	SLEEVE		1	
13	0000	18654A1	BELLOWS ASSEMBLY Exhaust		AR	
13	0000	78458A1	TUBE		AR	
14	0054	86049	CLIP Grounding		2	
15	0054	815504348	CLAMP Worm Gear		2	
16	0000	815303	ADAPTER		1	
17	0012	35935	WASHER (.435 x .875 x .105) Stainless Steel		6	
18	0011	859116	NUT (.437-20)		6	
18	0011	34933	NUT (.437-20) Stainless Steel		6	
19	0054	12994	CLIP		1	
20	0054	818557	CLAMP		2	
21	0000	865391	FITTING ASSEMBLY Speedometer Male Quick Connect		1	
22	0022	865417	FITTING Female Quick Connect		1	
23	0032	5495025	TUBING (25.00 Feet Bulk)		1	

Bell Housing (Integrated and Hi Performance Transom)

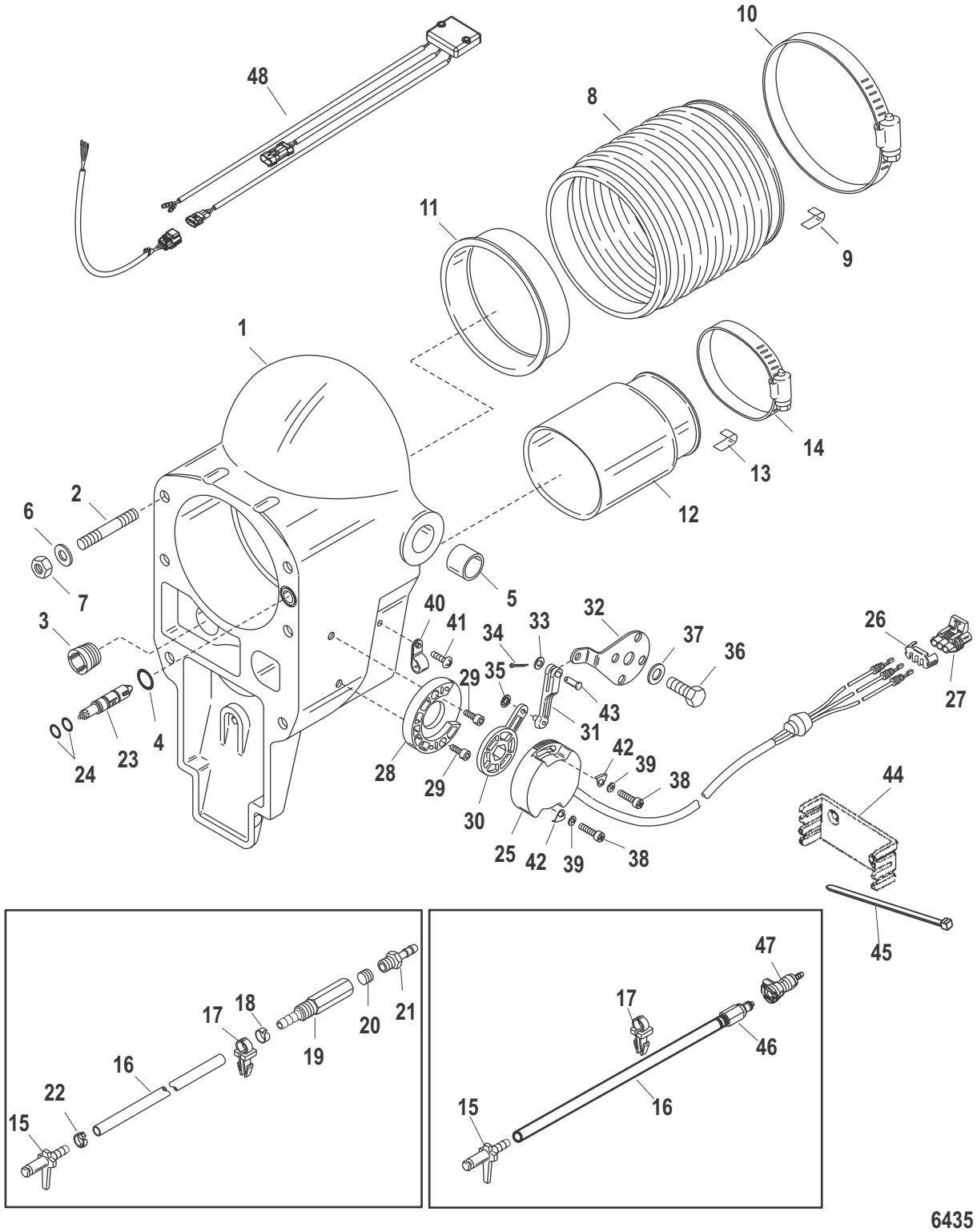

Cat.# 90-891749001

Bell Housing (Integrated and Hi Performance Transom)

Ref #	Part Class	Part Number	Description	Comments	Qty	Note
1	0000	41646A11	BELL HOUSING ASSEMBLY		1	
2	0016	59579	STUD (.437-14/.437-20 x 2.812)		6	
3	0000	41674	INSERT		1	
4	0025	62705	O-RING		1	
5	0023	847637	BUSHING		2	
6	0012	35935	WASHER (.435 x .875 x .105) Stainless Steel		5	
7	0011	859116	NUT (.437-20)		6	
8	0000	86840A3	BELLOWS ASSEMBLY		1	
9	0054	86049	CLIP Grounding		1	
10	0054	815504372	CLAMP Worm Gear		1	
11	0000	862209	SLEEVE		1	
12	0000	78458A1	TUBE		1	
13	0054	86049	CLIP Grounding		1	
14	0054	815504348	CLAMP Worm Gear		1	
15	0000	815303	ADAPTER		1	
16	0032	5495025	TUBING (25.00 Feet Bulk) Speedo	(Cut As Required)	1	
17	0054	12994	CLIP		1	
18	0054	816606	CLAMP		1	
19	0000	865261	FITTING	(Hi Performance Transom)	1	
20	0022	878089	PLUG Pipe (.0625-27)	(Hi Performance Transom)	1	
21	0022	814382	CONNECTOR	(Hi Performance Transom)	1	
22	0054	818557	CLAMP		1	
23	0000	18920A1	VALVE ASSEMBLY		1	
24	0025	48171	O-RING (.364. x .070)		2	
25	0000	863187A2	SENDER ASSEMBLY Trim	(For Use With Digital or Analog)	1	
26	0000	831957	RETAINER		1	
27	0000	8307973	CONNECTOR		1	
28	0000	840846	HOUSING Actuator Arm Support		1	
29	0010	90188	SCREW (#10-24 x .500) Stainless Steel		2	
30	0000	840845	ARM Actuator		1	
31	0000	840843	LINK ROD		1	
32	0000	840844	BRACKET		1	
33	0012	89302	WASHER (.203 x .406 x .040)		1	
34	0018	21071	COTTER PIN		1	
35	0011	65110	NUT		1	
36	0010	99204	SCREW (.437-14 x 1.00) Stainless Steel		1	
37	0012	842922	WASHER (.450 x .750 x .060) Stainless Steel		1	
38	0010	37978	SCREW (#10-32 x .750) Stainless Steel		2	
39	0013	26996	LOCKWASHER (#10) Stainless Steel		2	
40	0054	26550	CLAMP		1	
41	0010	807754	SCREW (#10-24 x .38)		1	

Bell Housing (Integrated and Hi Performance Transom)

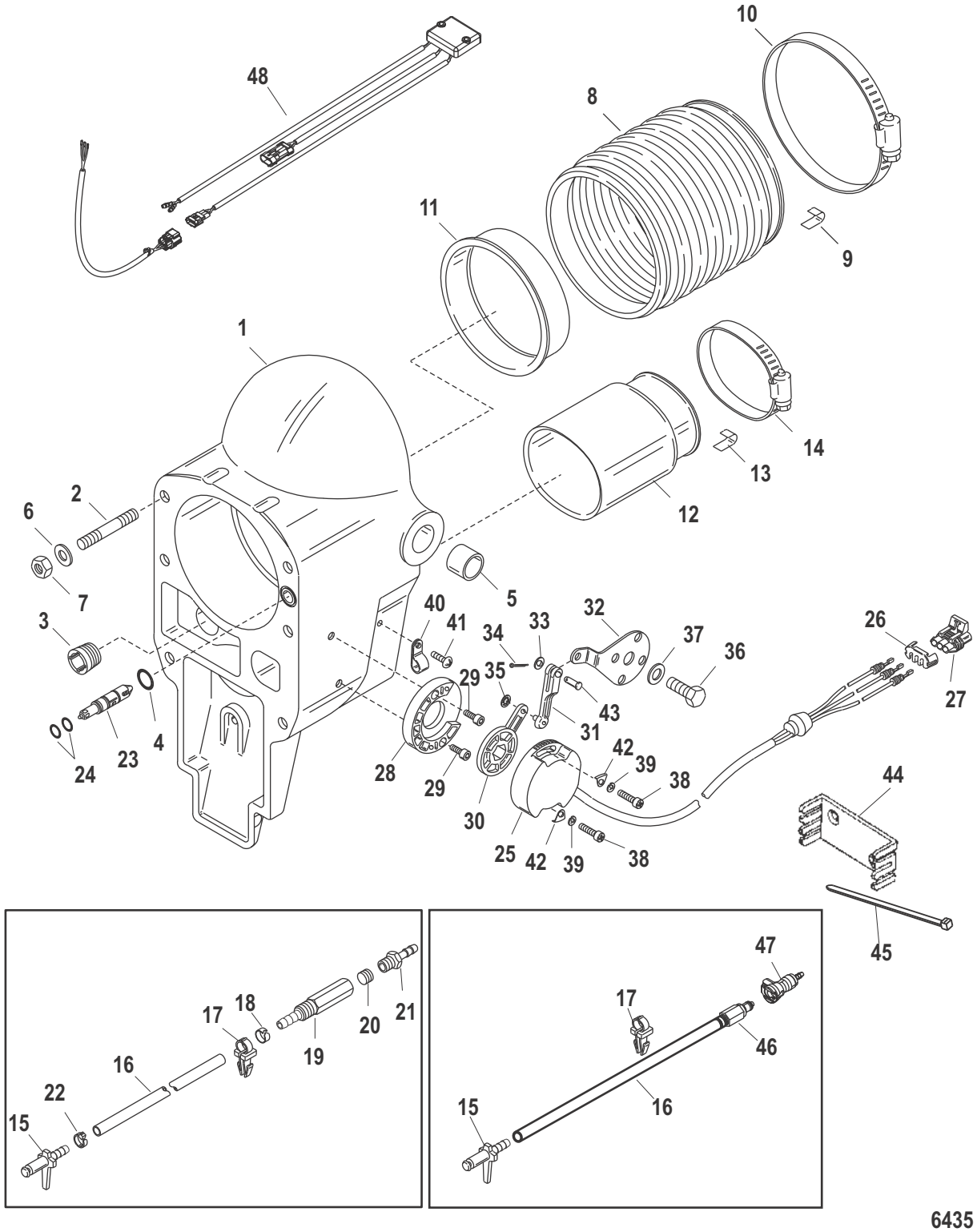

Cat.# 90-891749001

Bell Housing (Integrated and Hi Performance Transom)

Ref #	Part Class	Part Number	Description	Comments	Qty	Note
42	0000	57008	RETAINER		2	
43	0017	67297	PIN Clevis		1	
44	0000	79146	RETAINER		1	
45	0054	816311T	TIE STRAP (8.00 Inches)		1	
46	0000	865391	FITTING ASSEMBLY Speedometer Male Quick Connect	(Integrated Transom)	1	
47	0022	865417	FITTING Female Quick Connect	(Integrated Transom)	1	
48	0000	884359T1	MODULE ASSEMBLY Trim Sender		1	

Driveshaft Housing and Drive Gears

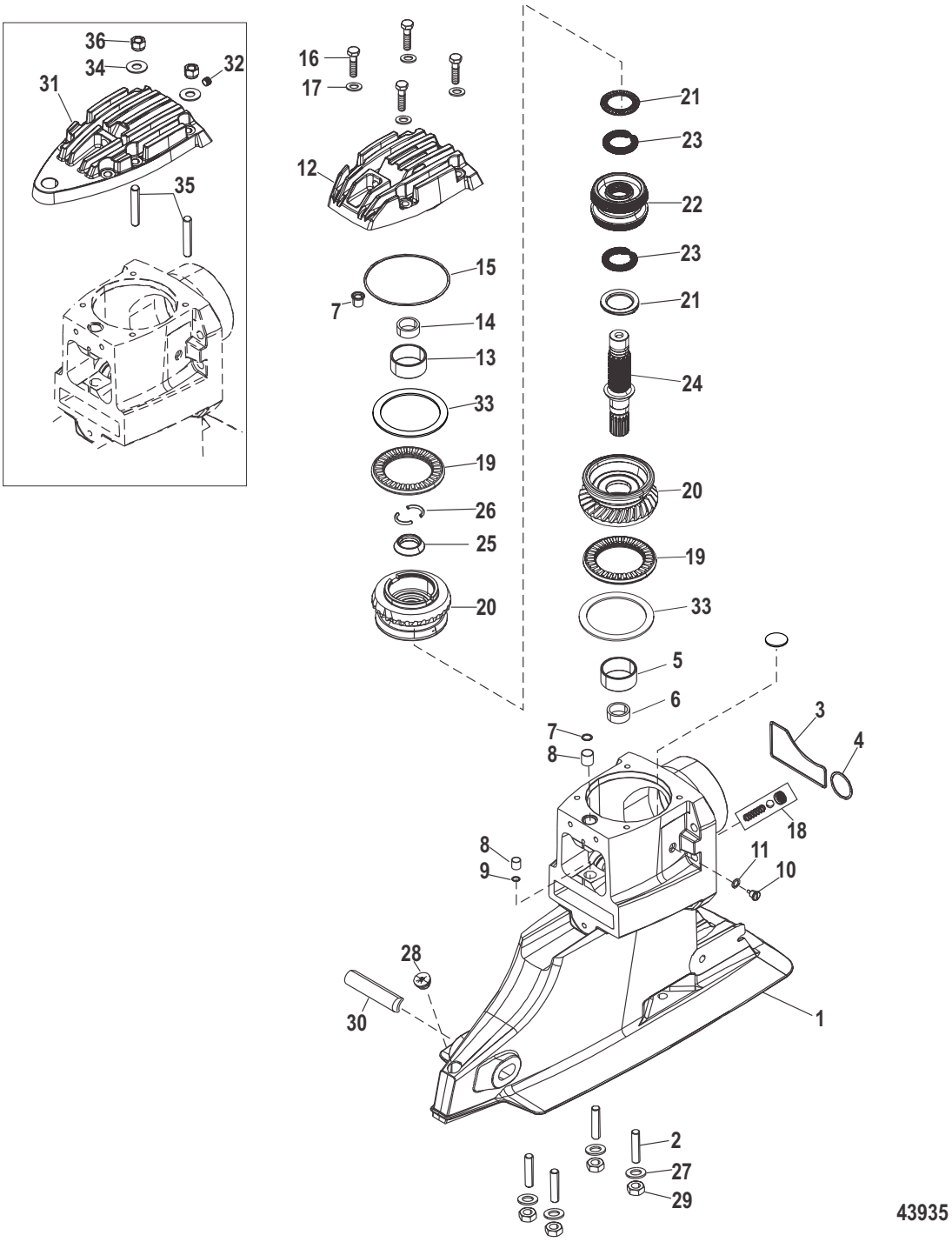

Cat.# 90-891749001

Driveshaft Housing and Drive Gears

Ref #	Part Class	Part Number	Description	Comments	Qty	Note
-	1589	865440H56	HOUSING ASSEMBLY Driveshaft - Complete (16/19)	(Use With Magnum and Hi-Performance Transom)	1	
-	1589	865440H73	HOUSING ASSEMBLY Driveshaft - Complete (16/19)	(Use With Integrated Transom)	1	
-	1500	866459J04	HOUSING ASSEMBLY Driveshaft - Complete (16/19)	(SEACORE)(Use With Magnum and Hi-Performance Transom)	1	
1	1589	865440H70	HOUSING Driveshaft - Basic		1	
1	1500	866459J00	HOUSING Driveshaft - Basic	(SEACORE)	1	
2	0016	579203	STUD (.437-14/.437-20 x 2.060)		4	
3	0000	16755Q1	SEAL		1	[1]
4	0025	45710	O-RING (1.424 x .103)		1	[2]
5	0031	861791	RACE		1	
6	0031	843240	BEARING ASSEMBLY Roller		1	
7	0019	865866	PLUG Shift Shaft Oil Seal		1	
8	0023	861209A1	BUSHING KIT		1	
9	0026	127091	SEAL		1	[2]
10	0022	67892A06	PLUG KIT Drain - Magnetic		1	
11	0026	830749	SEAL		1	[2]
12	0000	865507A04	COVER ASSEMBLY Top	(Use With Magnum and Hi-Performance Transoms)	1	
12	0000	866462A02	COVER ASSEMBLY Top	(SEACORE)(Use With Magnum and Hi-Performance Transoms)	1	
13	0031	861791	RACE		1	
14	0031	843240	BEARING ASSEMBLY Roller		1	
15	0025	97387	O-RING		1	[2]
16	0010	58642	SCREW (.375-16 x 1.50) Stainless Steel		4	
17	0012	37828	WASHER (.390 x .625 x .062) Stainless Steel		4	
18	0024	17997A1	SPRING KIT		1	[2]
19	0031	861787	BEARING ASSEMBLY		2	
20	0043	840898A3	GEAR SET (16/19)		1	
21	0031	861792	BEARING Thrust		2	
22	0052	865344A01	CLUTCH ASSEMBLY		1	
23	0024	93505	SPRING		2	
24	0045	812773T02	DRIVESHAFT Upper		1	
25	0023	86770	COLLAR		1	
26	0000	97351	KEEPER		2	[2]
27	0012	861854	WASHER (.453 x .750 x .032) Stainless Steel		4	
28	0019	824928	PLUG Rubber		1	
29	0011	35053	NUT (.437-20)		4	
30	0000	808006	INSERT Trim Adjustment		1	
31	0000	840838T1	COVER ASSEMBLY Top	(Use With Integrated Transoms)	1	
32	0022	390721	PLUG Pipe (.125-27) Brass		1	

Driveshaft Housing and Drive Gears

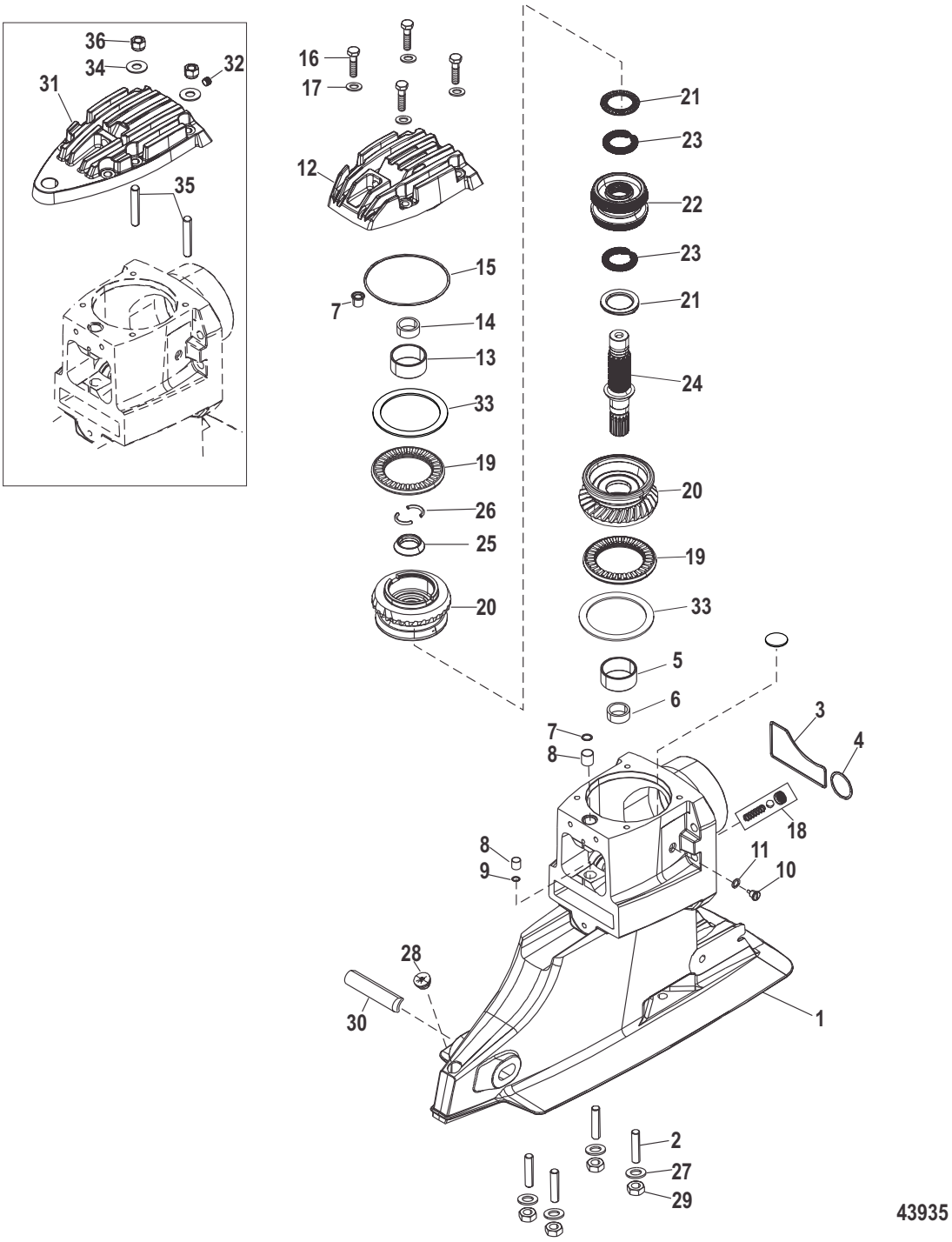

Cat.# 90-891749001

Driveshaft Housing and Drive Gears

Ref #	Part Class	Part Number	Description	Comments	Qty	Note
33	0023	864596058	SHIM/RACE (.0575/.0584 Thick) Brown Thrust Bearing		AR	
33	0023	864596059	SHIM/RACE (.0585/.0594 Thick) White Thrust Bearing		AR	
33	0023	864596060	SHIM/RACE (.0595/.0604 Thick) Orange Thrust Bearing		AR	
33	0023	864596061	SHIM/RACE (.0605/.0614 Thick) Green Thrust Bearing		AR	
33	0023	864596062	SHIM/RACE (.0615/.0624 Thick) Yellow Thrust Bearing		AR	
33	0023	864596063	SHIM/RACE (.0625/.0634 Thick) Red Thrust Bearing		AR	
33	0023	864596064	SHIM/RACE (.0635/.0644 Thick) Light Blue Thrust Bearing		AR	
33	0023	864596065	SHIM/RACE (.0645/.0654 Thick) Black Thrust Bearing		AR	
33	0023	864596066	SHIM/RACE (.0655/.0664 Thick) Pink Thrust Bearing		AR	
34	0012	37828	WASHER (.390 x .625 x .062) Stainless Steel		6	
35	0016	840851	STUD		6	
36	0011	82671013	NUT (.375-24) Stainless Steel		6	
-	0026	16709A2	SEAL KIT Driveshaft Housing		1	

PART NOTES:

[1] - Alternate part numbers:

16755Q 1QS

16755T 1MPP
COMPONENT OF DRIVESHAFT HOUSING SEAL KIT 16709A 2

[2] - COMPONENT OF DRIVESHAFT HOUSING SEAL KIT 16709A 2

Universal Joint and Shift Components

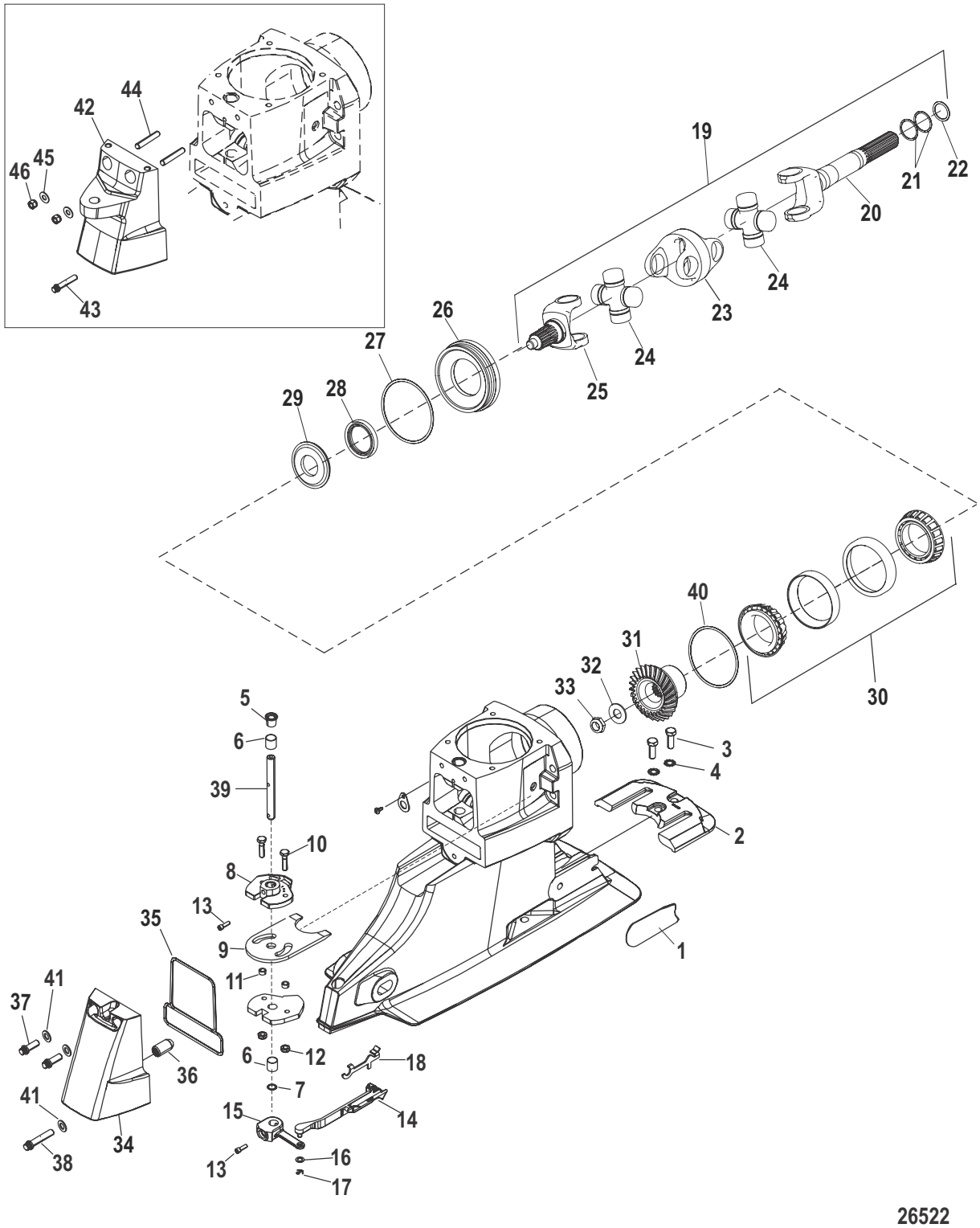

Cat.# 90-891749001

Universal Joint and Shift Components

Ref #	Part Class	Part Number	Description	Comments	Qty	Note
-	1589	865440H56	HOUSING ASSEMBLY Driveshaft - Complete (16/19)	(Use With Magnum and Hi-Performance Transom)	1	
-	1589	865440H73	HOUSING ASSEMBLY Driveshaft - Complete (16/19)	(Use With Integrated Transom)	1	
-	1500	866459J04	HOUSING ASSEMBLY Driveshaft - Complete (16/19)	(SEACORE)(Use With Magnum and Hi-Performance Transom)	1	
-	1589	865440H70	HOUSING Driveshaft - Basic		1	
-	1500	866459J00	HOUSING Driveshaft - Basic	(SEACORE)	1	
1	0000	805261A1	WEAR PAD KIT		1	
2	0097	821630Q1	ANODE ASSEMBLY		1	[1]
3	0010	65210	SCREW (.375-16 x 1.00)		2	
4	0013	35479	LOCKWASHER (.375)		2	
5	0019	865866	PLUG Shift Shaft Oil Seal		1	
6	0023	861209A1	BUSHING KIT		1	
7	0026	127091	SEAL		1	
8	0000	806552A1	YOKE AND CAM ASSEMBLY		1	
9	0000	806552	YOKE Shifter		1	
10	0010	805733	SCREW (.250-28 x 1.00)		2	
11	0023	12706	SPACER (.194 x .375)		2	
12	0011	8267139	NUT (.250-28)		2	
13	0010	865712	SCREW (.250-28 x .930)		2	
14	0000	861175A2	SHIFT LINKAGE ASSEMBLY High Bump Shift Lever		1	
15		NSS	NOT SOLD SEPARATE SHIFT LEVER		1	
16	0012	20583	WASHER		1	
17	0018	26953	COTTER PIN		1	
18	0000	86776	LATCH		1	
19	0000	865425A03	UNIVERSAL JOINT ASSEMBLY		1	
19	0000	865425T02	UNIVERSAL JOINT ASSEMBLY	(Use With Integrated Transom Assemblies)	1	
20	0000	866133A01	YOKE Splined Coupler End		1	
20	0000	866135A01	YOKE Splined Coupler End	(Integrated Transom Assembly)	1	
21	0025	29845	O-RING (.924 x .103)		2	[2]
22	0025	35027	O-RING (1.046)		1	[2]
23	0000	866137T	SOCKET Center		1	
24	0000	866136A01	CROSS AND BEARING		1	
25	0000	866134T	YOKE Gear End		1	
26	0011	841026A2	RETAINER/SEAL KIT		1	
27	0025	861844	O-RING		1	
28	0026	43993	SEAL Oil		1	
29	0012	862134	WASHER		1	
30	0031	86763A04	BEARING ASSEMBLY Tapered Roller		1	
31	0043	849320T	GEAR (16 Teeth)		1	
32	0012	861832	WASHER		1	

Universal Joint and Shift Components

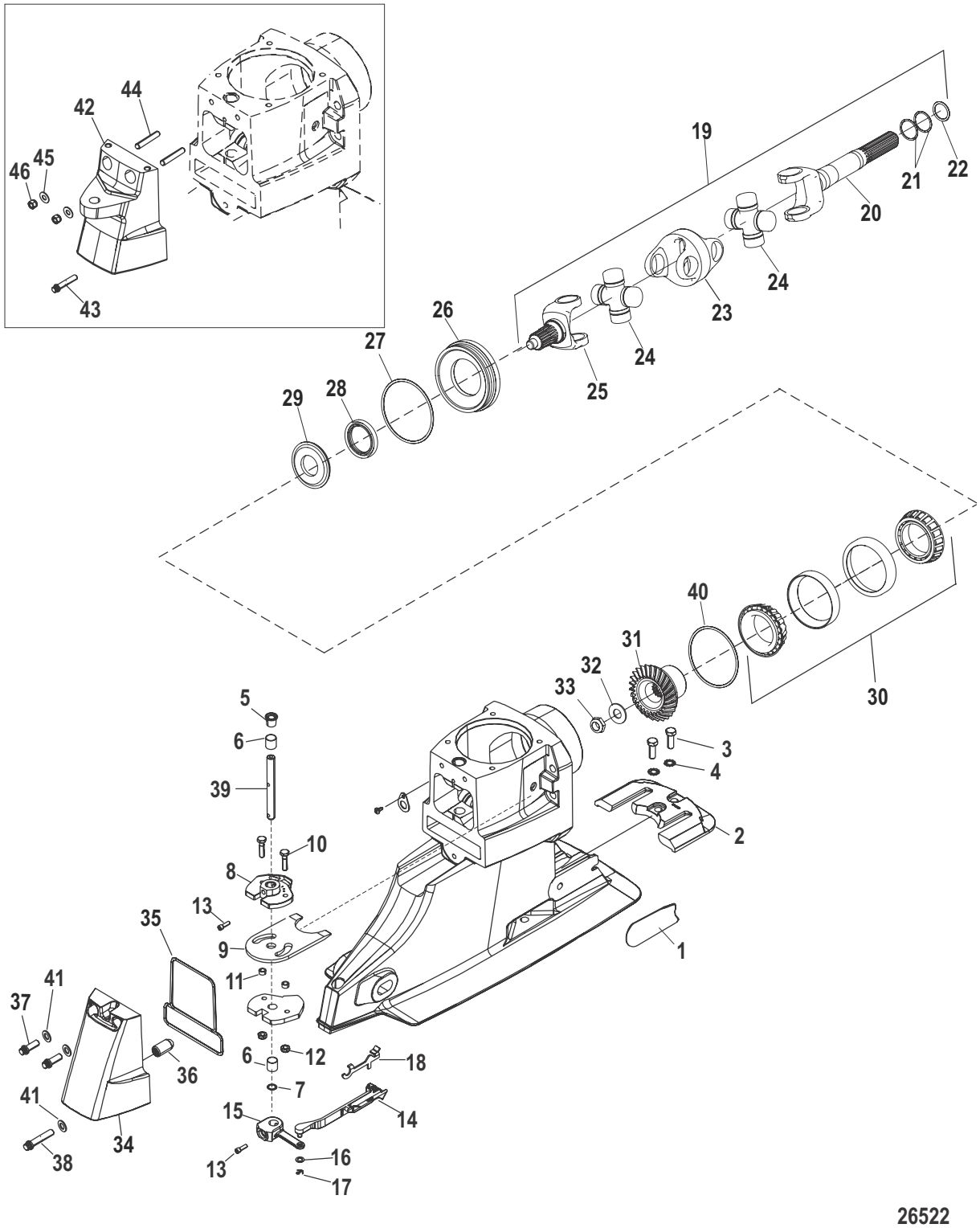

Cat.# 90-891749001

Universal Joint and Shift Components

Ref #	Part Class	Part Number	Description	Comments	Qty	Note
33	0011	97522	NUT (.625-18)		1	
34	0000	865441A02	COVER ASSEMBLY Back	(Use With Magnum and Hi-Performance Transom)	1	
34	0000	866463A02	COVER ASSEMBLY Back	(SEACORE)(Use With Magnum and Hi-Performance Transom)	1	
35	0000	12708	SEAL		1	[2]
36	0000	14497A2	DETENT ASSEMBLY		1	
37	0010	98794	SCREW (.375-16 x 1.00)		2	
38	0010	87158	SCREW (.375-16 x 1.875)		1	
39	0000	12711	SHAFT		1	
40	0015	888927028	SHIM (.028)		1	
40	0015	888927029	SHIM (.029)		1	
40	0015	888927030	SHIM (.030)		1	
40	0015	888927031	SHIM (.031)		1	
40	0015	888927032	SHIM (.032)		1	
40	0015	888927033	SHIM (.033)		1	
40	0015	888927034	SHIM (.034)		1	
40	0015	888927035	SHIM (.035)		1	
40	0015	888927036	SHIM (.036)		1	
40	0015	888927037	SHIM (.037)		1	
40	0015	888927038	SHIM (.038)		1	
40	0015	888927039	SHIM (.039)		1	
40	0015	888927040	SHIM (.040)		1	
41	0012	37828	WASHER (.390 x .625 x .062) Stainless Steel	SEACORE	3	
42	0000	842783T01	COVER ASSEMBLY		1	
43	0010	87158	SCREW (.375-16 x 1.875)		1	
44	0016	57932	STUD (.375-16/.375-24 x 1.750)		2	
45	0012	37828	WASHER (.390 x .625 x .062) Stainless Steel		2	
46	0011	34932	NUT (.375-24)		2	
-	0026	16709A2	SEAL KIT Driveshaft Housing		1	

PART NOTES:

[1] - Alternate part numbers:

821630A 1Service Part

821630A 2Magnesium

821630Q 1QS

821630T 1MPP

[2] - COMPONENT OF DRIVESHAFT HOUSING SEAL KIT 16709A 2

Gear Housing (Bravo I XR)

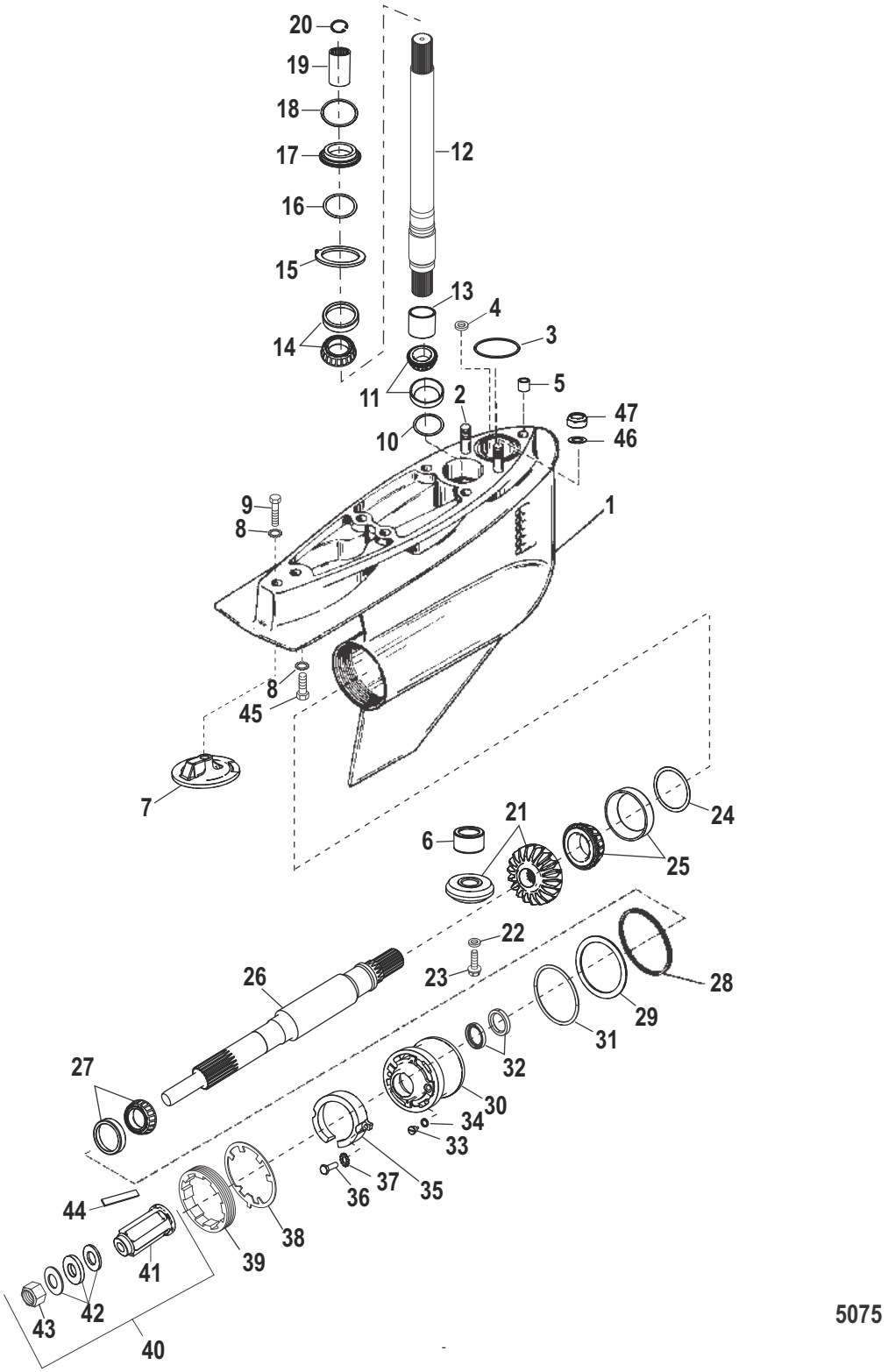

Cat.# 90-891749001

Gear Housing (Bravo I XR)

Ref #	Part Class	Part Number	Description	Comments	Qty	Note
-	1656	8866A80	GEAR HOUSING ASSEMBLY (17/18) (1.26:1 Ratio)	(Bravo I)		
-	1656	8866A81	GEAR HOUSING ASSEMBLY (15/17) (1.35:1 Ratio)	(Bravo I)	1	
-	1656	8866A61	GEAR HOUSING ASSEMBLY (15/19) (1.50:1 Ratio)	(Bravo I)	1	
-	1656	8866A82	GEAR HOUSING ASSEMBLY (17/18) (1.26:1 Ratio)	(Bravo I)	1	
-	1656	8866A83	GEAR HOUSING ASSEMBLY (15/17) (1.35:1 Ratio)	(Bravo I)	1	
-	1656	8866A62	GEAR HOUSING ASSEMBLY (15/19) (1.50:1 Ratio)	(Bravo I)	1	
1	1656	8866A17	GEAR HOUSING ASSEMBLY	(Bravo I - Standard)	1	
1	1656	8866A54	GEAR HOUSING ASSEMBLY	(Bravo I - With Low Water Pick-Up)	1	
1	1656	8866A64	GEAR HOUSING ASSEMBLY	(Bravo I - Dual Water Pick-Up)	1	
2	0016	579203	STUD (.437-14/.437-20 x 2.060)		2	
3	0025	33465	O-RING		1	[1]
4	0026	455771	SEAL		1	[1]
5	0026	805344	SEAL (.625 Outside Diameter)		1	
6	0031	86754T	BEARING ASSEMBLY Roller		1	
7	0097	76214Q5	ANODE KIT		1	[2]
8	0013	806210	LOCKWASHER (.437)		1	
9	0010	806327	SCREW (.437-14 x 1.750)		1	
10	0015	92914A1	SHIM KIT		AR	
11	0031	66668A1	BEARING ASSEMBLY Tapered Roller		1	
12	0045	858517A3	DRIVESHAFT ASSEMBLY (16.085 Long)		1	
13	0031	815901	RACE Bearing		1	
14	0031	86748A1	BEARING ASSEMBLY Tapered Roller		1	
15	0014	86739	TAB WASHER		1	[1]
16	0015	86749A1	SHIM KIT		AR	
17	0023	92916	SPACER		1	
18	0025	20826	O-RING (2.230 x .139)		1	
19	0000	88243A3	COUPLING ASSEMBLY		1	
20	0053	88242	RING Retaining		1	
21	0043	818928A2	GEAR SET (15/19)		1	
21	0043	840872A1	GEAR SET (15/17)		1	
21	0043	840870A1	GEAR SET (17/18)		1	
22	0012	805068	WASHER		1	
23	0010	808027	SCREW		1	
24	0015	87157A1	SHIM KIT		AR	
25	0031	86752A1	BEARING ASSEMBLY Tapered Roller		1	
26	0044	840377T	PROPELLER SHAFT		1	
27	0031	812767A1	BEARING ASSEMBLY Tapered Roller		1	

Gear Housing (Bravo I XR)

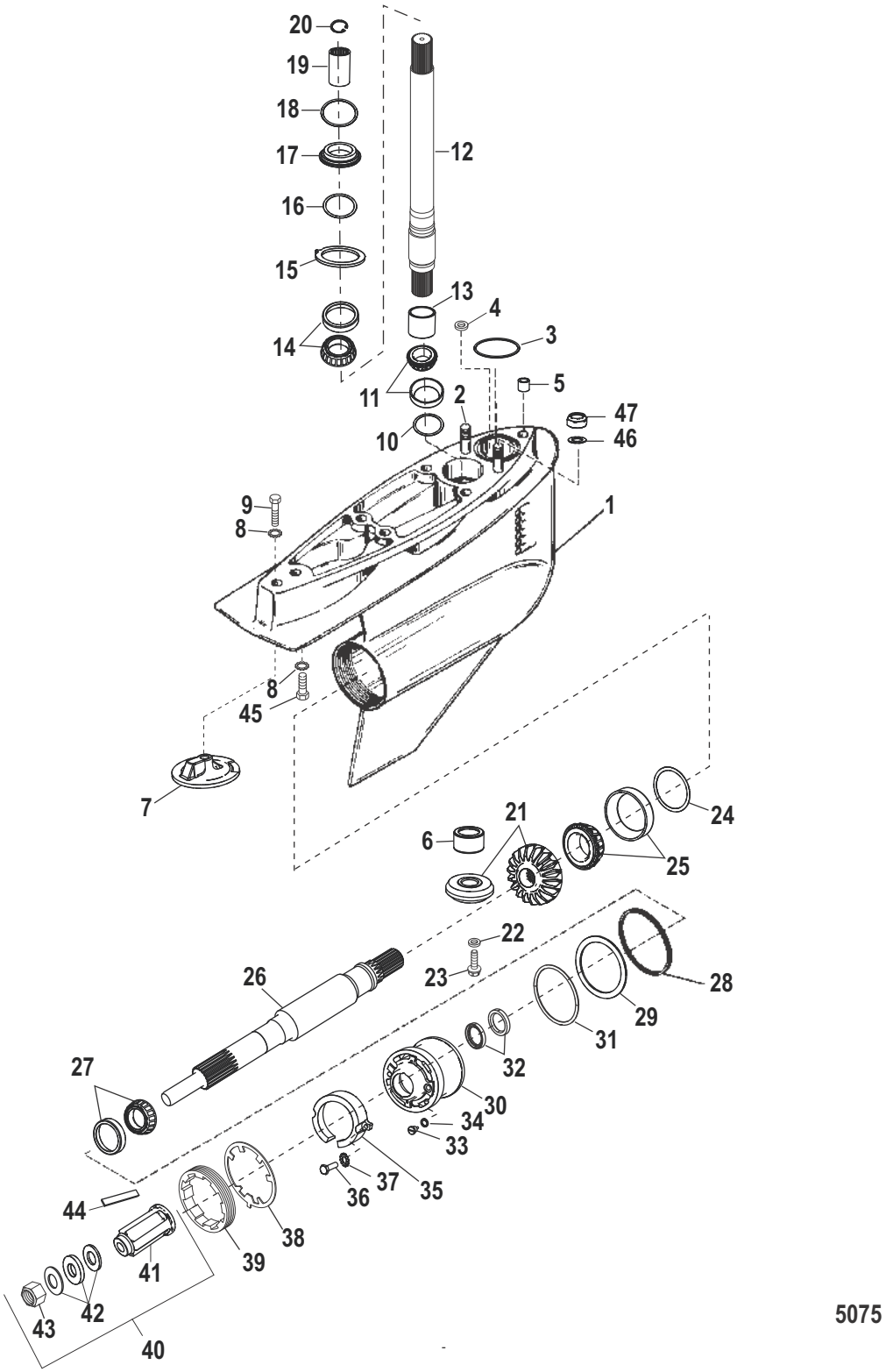

Cat.# 90-891749001

Gear Housing (Bravo I XR)

Ref #	Part Class	Part Number	Description	Comments	Qty	Note
28	0000	67440T	LOAD RING		1	
29	0012	42256	THRUST WASHER (.105 Inch Thick)		1	
30	0000	840372A2	CARRIER ASSEMBLY Bearing		1	
31	0025	31534	O-RING		1	[1]
32	0026	815565	SEAL Oil		2	[1]
33	0022	67892A06	PLUG KIT Drain - Magnetic		1	
34	0026	830749	SEAL Sealing		1	[1]
35	0097	806188A1	ANODE ASSEMBLY		1	[3]
36	0010	806290	SCREW (#10-32 x .625)		2	
37	0013	69432	LOCKWASHER External (#10)		2	
38	0014	18323	TAB WASHER Keyed		1	
39	0000	79448	RETAINER Bearing Carrier		1	
40	0000	840389A5	HUB ASSEMBLY Propeller		1	
41		NSS	NOT SOLD SEPARATE HUB-Propeller		1	
42	0012	840383A1	WASHER/NUT KIT		1	
43	0011	52707Q1	PROP NUT KIT (.750-16)		1	[4]
44	0000	840382A1	SNUBBER STRIP KIT		1	
45	0010	90084	SCREW (.437-14 x 1.500)		1	
46	0012	861854	WASHER (.453 x .750 x .032) Stainless Steel		2	
47	0011	35053	NUT (.437-20)		2	
-	0026	815565A1	SEAL KIT Gear Housing		AR	
-	0000	888758A1	ANODE KIT Aluminum	(Bravo One)	AR	[5]
-	0000	888757A1	ANODE KIT Magnesium	(Bravo One)	AR	[6]

PART NOTES:

[1] - COMPONENT OF GEAR HOUSING SEAL KIT 815565A 1

[2] - Alternate part numbers:

76214 5Service Part

76214A 6Magnesium

76214Q 5QS

76214T 5MPP

8M0059339Bulk Pack

[3] - Alternate part numbers:

806188A 1Service Part

806188A 2Magnesium

806188K01MPP

806188Q01QS

Gear Housing (Bravo I XR)

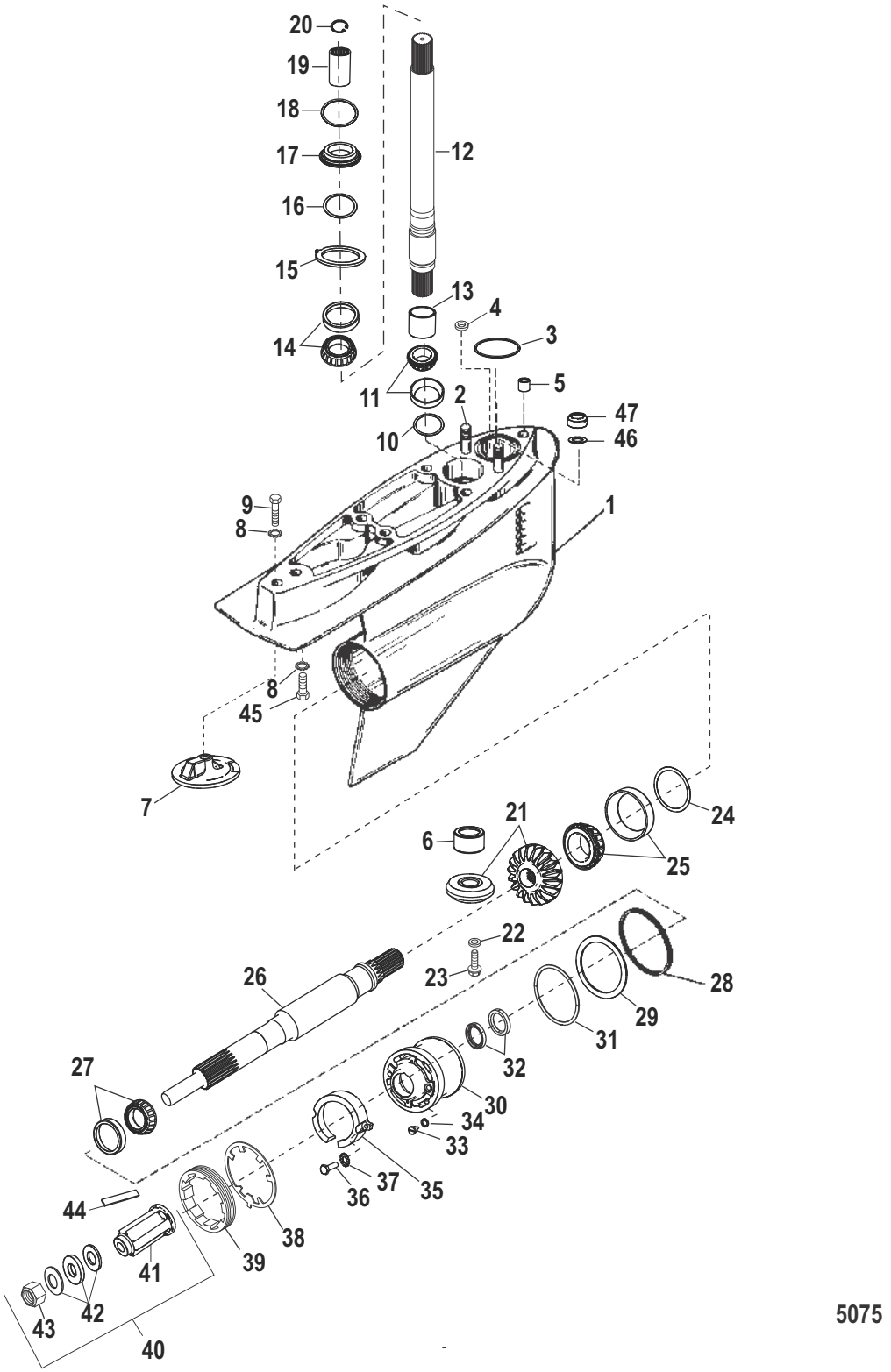

[4] - Alternate part numbers:

52707A 1Service Part

52707Q 1QS

52707T 1MPP

827614BBulk Pack

[5] - Alternate part numbers:

888758A 1Service Part

888758K01MPP

888758Q02QS

[6] - Alternate part numbers:

888757A 1Service Part

888757K01MPP

888757Q02QS

Gear Housing (Bravo III)

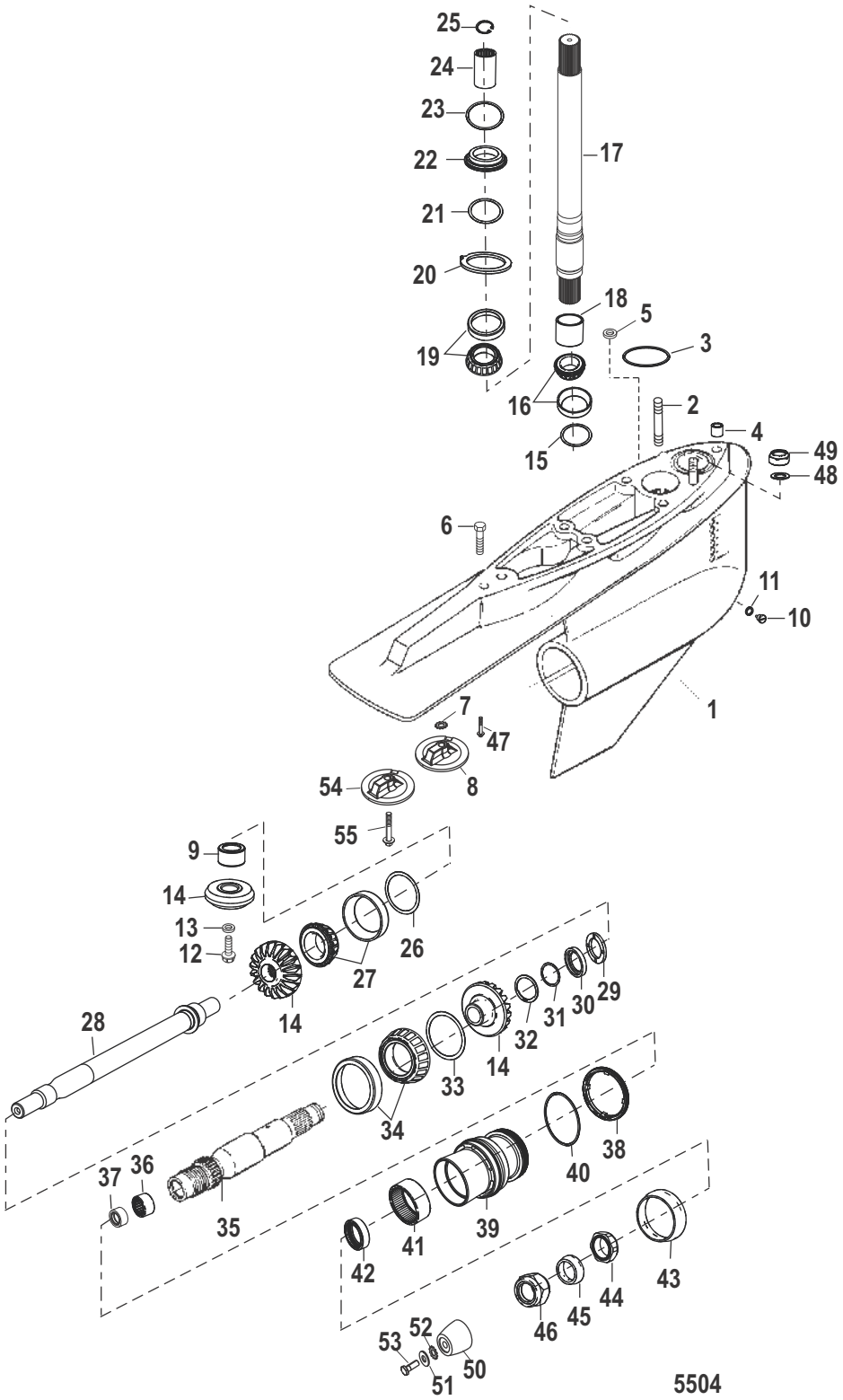

Cat.# 90-891749001

Gear Housing (Bravo III)

Ref #	Part Class	Part Number	Description	Comments	Qty	Note
-	1656	8866G03	GEAR HOUSING ASSEMBLY Complete (18/25) (1.65:1 Ratio)		1	
-	1656	8M0046735	GEAR HOUSING ASSEMBLY Complete (18/25) Dual Water Pickup (1.65:1 Ratio)		1	
-	1656	8866G06	GEAR HOUSING ASSEMBLY Complete (17/26) (1.81:1 Ratio)		1	
-	1656	8M0046831	GEAR HOUSING ASSEMBLY Complete (17/26) Dual Water Pick-Up (1.81:1 Ratio)		1	
-	1656	8866G04	GEAR HOUSING ASSEMBLY Complete (16/27) (2.00:1 Ratio)		1	[1]
-	1656	8M0046738	GEAR HOUSING ASSEMBLY Complete (16/27) Dual Water Pickup (2.00:1 Ratio)		1	
-	1656	8866J07	GEAR HOUSING ASSEMBLY Complete (17/26) (1.81:1 & 2.00:1 Ratio)	(SEACORE)	1	
-	1656	8866J04	GEAR HOUSING ASSEMBLY Complete (16/27) (2.00:1 Ratio)	(SEACORE)	1	
1	1656	8866G01	GEAR HOUSING ASSEMBLY Basic		1	
1	1656	8M0046683	GEAR HOUSING ASSEMBLY Basic, Dual Water Pickup		1	
1	1656	8866J30	GEAR HOUSING ASSEMBLY Basic	(SEACORE)	1	
2	0016	579203	STUD (.437-14/.437-20 x 2.060)		2	
3	0025	33465	O-RING		1	
4	0026	805344	SEAL (.625 Outside Diameter)		1	
5	0026	455771	SEAL		1	
6	0010	806327	SCREW (.437-14 x 1.750)		1	
7	0013	806210	LOCKWASHER (.437)		1	
8	0097	76214Q5	ANODE KIT		1	[2]
9	0031	86754T	BEARING ASSEMBLY Roller		1	
10	0022	67892A06	PLUG KIT Drain - Magnetic		1	
11	0026	830749	SEAL		1	
12	0010	808027	SCREW		1	
13	0012	805068	WASHER		1	
14	0043	824517A1	GEAR SET (18/25)	(1.65:1 Ratio)	1	[3]
14	0043	822535A1	GEAR SET (16/27)	(2.00:1 Ratio)	1	[4]
14	0043	841910A01	GEAR SET (17/26)	(1.81:1 Ratio)	1	
15	0015	92914A1	SHIM KIT		AR	
16	0031	66668A1	BEARING ASSEMBLY Tapered Roller		1	
17	0045	858517A3	DRIVESHAFT ASSEMBLY (16.085 Long)		1	
18	0031	815901	RACE Bearing		1	
19	0031	86748A1	BEARING ASSEMBLY Tapered Roller		1	
20	0014	86739	TAB WASHER		1	
21	0015	86749A1	SHIM KIT		AR	

Gear Housing (Bravo III)

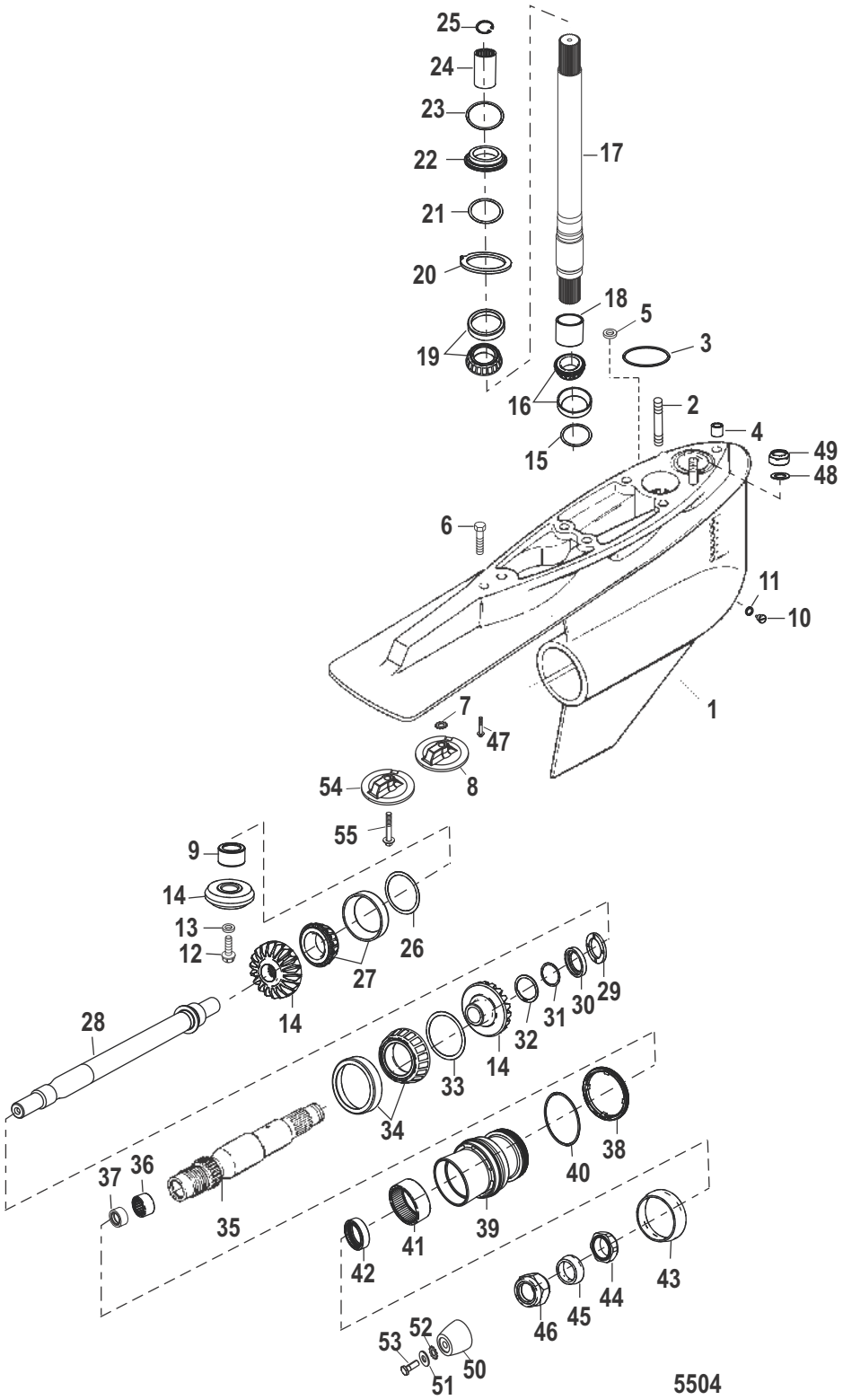

Cat.# 90-891749001

Gear Housing (Bravo III)

Ref #	Part Class	Part Number	Description	Comments	Qty	Note
22	0023	92916	SPACER		1	
23	0025	20826	O-RING (2.230 x .139)		1	
24	0000	88243A3	COUPLING ASSEMBLY		1	
25	0053	88242	RING Retaining		1	
26	0015	87157A1	SHIM KIT		AR	
27	0031	86752A1	BEARING ASSEMBLY Tapered Roller		1	
28	0044	865322T	PROPELLER SHAFT Inner		1	
29	0031	805322	BEARING Caged Roller	[0W217056] & Below	1	
29	0031	865260	BEARING Thrust	[0W217057] & Up	1	
30	0023	805072	BUSHING		1	
31	0015	805627A1	SHIM ASSEMBLY		AR	
32	0053	805096	RING Retaining		1	
33	0015	805078A1	SHIM ASSEMBLY		AR	
34	0031	805182A1	BEARING ASSEMBLY Tapered Roller		1	
35	0044	805074A2	PROPELLER SHAFT Outer	[0W217056] & Below	1	
35	0044	865315A02	PROPELLER SHAFT Outer	[0W217057] & Up	1	
36	0031	57410	BEARING Roller		1	
37	0026	861695	SEAL		1	
38	0000	805330	RETAINER		1	
39	0000	805329A1	CARRIER ASSEMBLY Bearing		1	
39	0000	865876A03	CARRIER ASSEMBLY Bearing	SEACORE	1	
40	0025	805331	O-RING		1	
41	0031	805079T	BEARING Roller		1	
42	0026	861694	SEAL Oil		1	
43	0000	805100T	THRUST HUB Front		1	
44	0011	859131	PROP NUT Front		1	
45	0000	805101T	THRUST HUB Rear		1	
46	0011	862907	PROP NUT Rear		1	
47	0010	90084	SCREW (.437-14 x 1.500)		1	
48	0012	861854	WASHER (.453 x .750 x .032) Stainless Steel		2	
49	0011	35053	NUT (.437-20)		2	
50	0000	865182A01	ANODE KIT Aluminum Propeller Shaft		1	
50	0097	865182A02	ANODE KIT Magnesium Propeller Shaft		1	[5]
51	0012	814806	WASHER (.344 x .688 x .065) Stainless Steel		1	
52	0013	72521	LOCKWASHER Internal Tooth		1	
53	0010	865323	SCREW		1	
54	0097	762144	ANODE		1	
55	0010	865321	SCREW (.437-14 x 1.250)		1	
-	0026	76868A2	SEAL KIT Gear Housing		1	
-	0000	888761Q02	ANODE KIT Aluminum	(Bravo III)	1	[6]
-	0000	888760Q02	ANODE KIT Magnesium	(Bravo III)	1	[7]

Gear Housing (Bravo III)

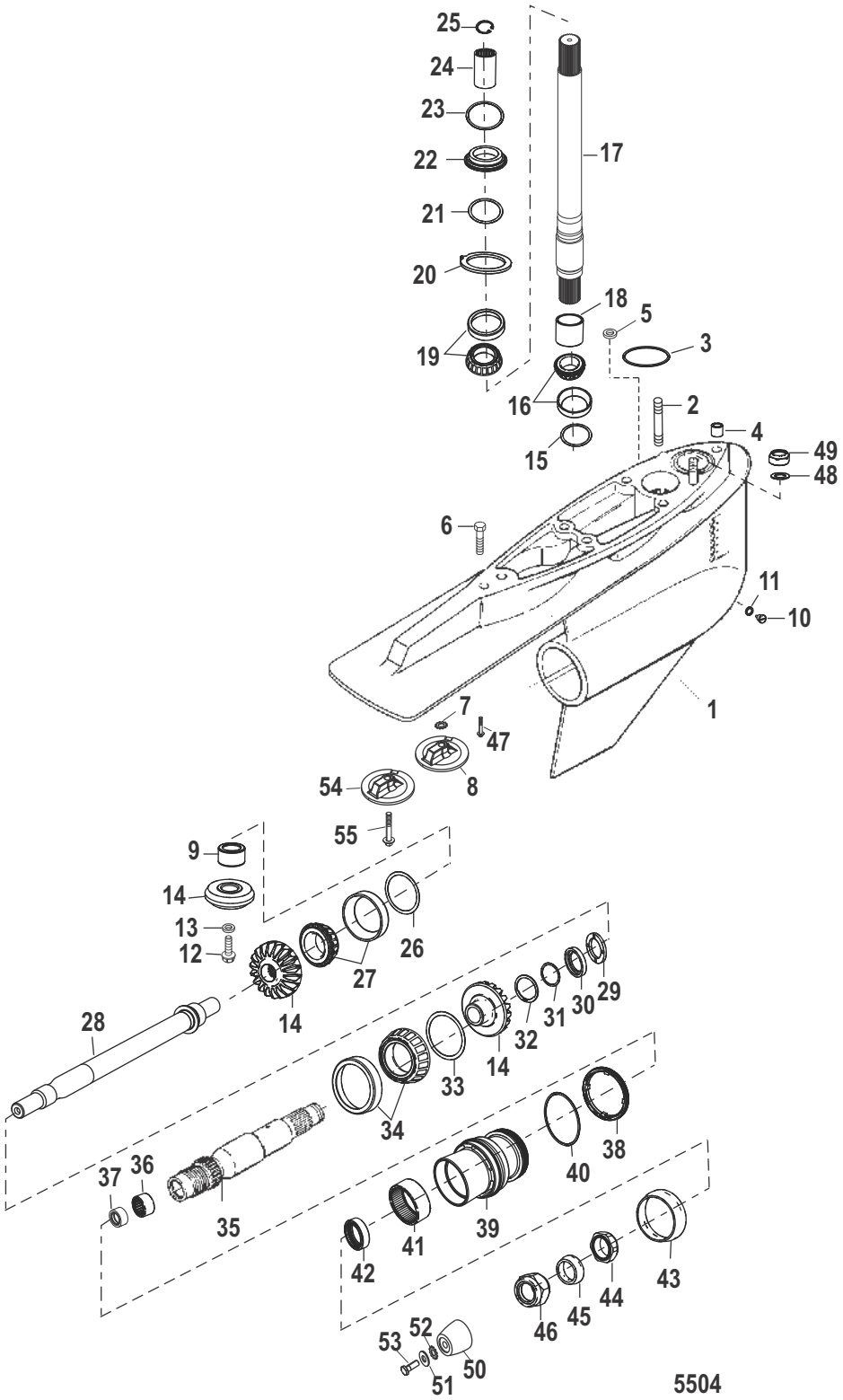

Cat.# 90-891749001

Gear Housing (Bravo III)

PART NOTES:

[1] - Alternate part numbers:

8866G04QS

8866R04Reman

[2] - Alternate part numbers:

76214 5Service Part

76214A 6Magnesium

76214Q 5QS

76214T 5MPP

8M0059339Bulk Pack

[3] - Alternate part numbers:

803087T 1Kit

824517A 1Service Part

[4] - Alternate part numbers:

803088T02Kit

822535A 1Service Part

[5] - Alternate part numbers:

865108A01Service Part

865182A02Magnesium

865182K01MPP

865182Q01QS

[6] - Alternate part numbers:

888761K02MPP

888761Q02Service Part

888761Q04QS

[7] - Alternate part numbers:

888760K02MPP

888760Q02Service Part

888760Q04QS

Gear Housing (Bravo I XR/SportMaster)(0M955633 and Below)

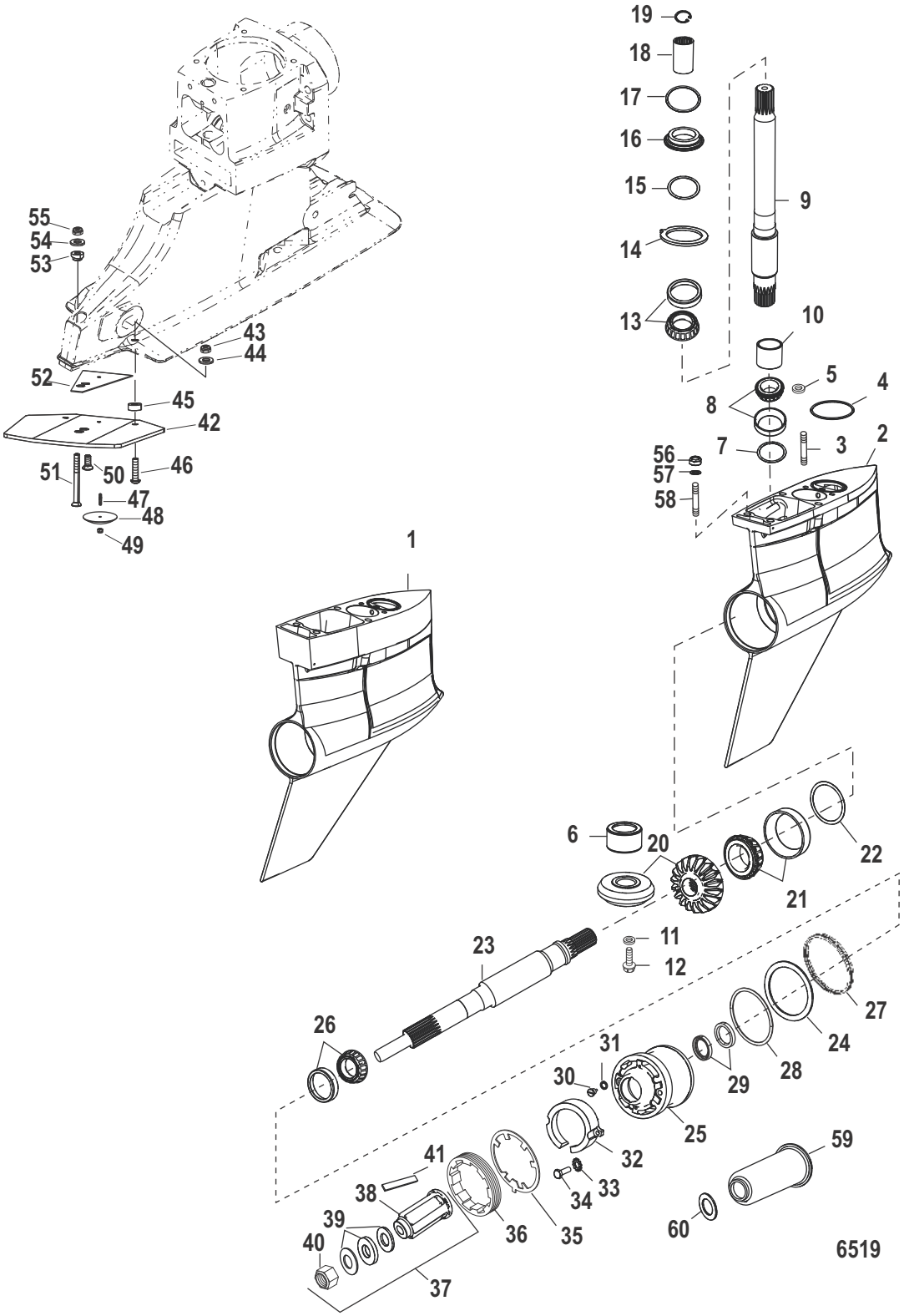

Cat.# 90-891749001

Gear Housing (Bravo I XR/SportMaster)(0M955633 and Below)

Ref #	Part Class	Part Number	Description	Comments	Qty	Note
-	1600	883608T19	GEAR HOUSING ASSEMBLY Complete	(17/18 Long Style) Design II - Aluminum Splash Plate	1	
-	1600	883608T29	GEAR HOUSING ASSEMBLY Complete	(17/18 Long Style) Design III - Stainless Steel Splash Plate [0M955633] & Below	1	
-	1600	883608T20	GEAR HOUSING ASSEMBLY Complete	(17/18 Short Style) Design II - Aluminum Splash Plate	1	
-	1600	883608T30	GEAR HOUSING ASSEMBLY Complete	(17/18 Short Style) Design III - Stainless Steel Splash Plate [0M955633] & Below	1	
-	1600	883608T21	GEAR HOUSING ASSEMBLY Complete	(15/17 Long Style) Design II - Aluminum Splash Plate	1	
-	1600	883608T31	GEAR HOUSING ASSEMBLY Complete	(15/17 Long Style) Design III - Stainless Steel Splash Plate [0M955633] & Below	1	
-	1600	883608T22	GEAR HOUSING ASSEMBLY Complete	(15/17 Short Style) Design II - Aluminum Splash Plate	1	
-	1600	883608T32	GEAR HOUSING ASSEMBLY Complete	(15/17 Short Style) Design III - Stainless Steel Splash Plate [0M955633] & Below	1	
-	1600	883608T23	GEAR HOUSING ASSEMBLY Complete	(15/19 Long Style) Design II - Aluminum Splash Plate	1	
-	1600	883608T33	GEAR HOUSING ASSEMBLY Complete	(15/19 Long Style) Design III - Stainless Steel Splash Plate [0M955633] & Below	1	
-	1600	883608T24	GEAR HOUSING ASSEMBLY Complete	(15/19 Short Style) Design II - Aluminum Splash Plate	1	
-	1600	883608T34	GEAR HOUSING ASSEMBLY Complete	(15/19 Short Style) Design III - Stainless Steel Splash Plate [0M955633] & Below	1	
1	1600	883608T27	GEAR HOUSING ASSEMBLY Basic - Long Style	- Design II - Aluminum Splash Plate	1	
1	1600	883608T35	GEAR HOUSING ASSEMBLY Basic - Long Style	- Design III - Stainless Steel Splash Plate [0M955633] & Below	1	
2	1600	883608T28	GEAR HOUSING ASSEMBLY Basic - Short Style	- Design II - Aluminum Splash Plate	1	
2	1600	883608T36	GEAR HOUSING ASSEMBLY Basic - Short Style	- Design III - Stainless Steel Splash Plate [0M955633] & Below	1	
3	0016	579203	STUD (.437-14/.437-20 x 2.060)		2	
4	0025	33465	O-RING		1	
5	0026	455771	SEAL Quad Ring		1	
6	0031	86754T	BEARING ASSEMBLY Roller Needle		1	
7	0015	92914A1	SHIM KIT		AR	
8	0031	66668A1	BEARING ASSEMBLY Tapered Roller		1	
9	0045	858517A3	DRIVESHAFT ASSEMBLY (16.085 Long)	Long Style Models	1	
9	0045	840979T1	DRIVESHAFT ASSEMBLY (14.085 Long)	Short Style Models	1	
10	0031	815901	RACE Bearing		1	
11	0012	805068	WASHER		1	

Gear Housing (Bravo I XR/SportMaster)(0M955633 and Below)

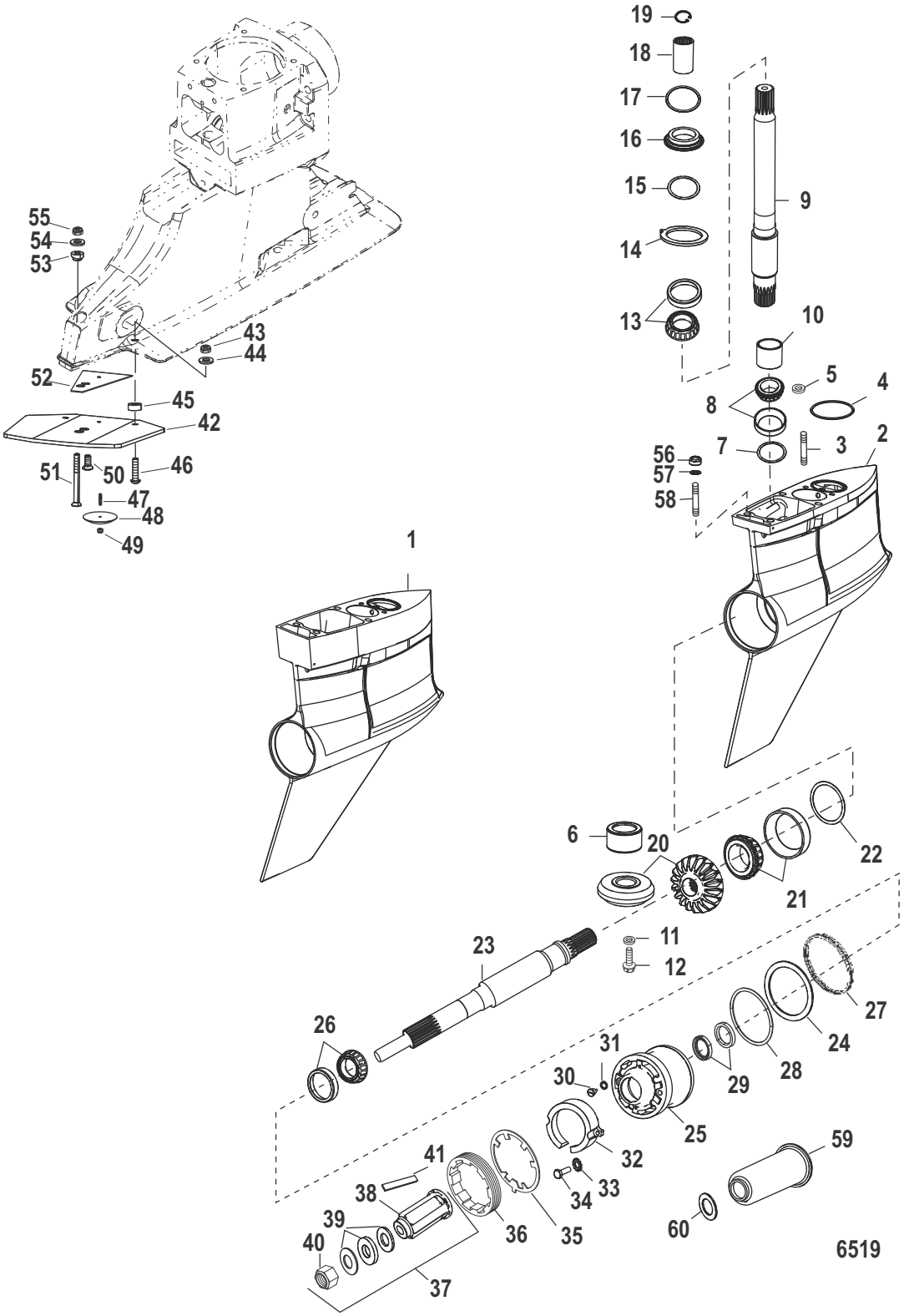

Cat.# 90-891749001

Gear Housing (Bravo I XR/SportMaster)(0M955633 and Below)

Ref #	Part Class	Part Number	Description	Comments	Qty	Note
12	0010	808027	SCREW		1	
13	0031	86748A1	BEARING ASSEMBLY Tapered Roller		1	
14	0014	86739	TAB WASHER		1	
15	0015	86749A1	SHIM KIT		AR	
16	0023	92916	SPACER		1	
17	0025	20826	O-RING (2.230 x .139)		1	
18	0000	88243A3	COUPLING ASSEMBLY		1	
19	0053	88242	RING Retaining		1	
20	0043	818928A2	GEAR SET (15/19)		1	
20	0043	840872A1	GEAR SET (15/17)		1	
20	0043	840870A1	GEAR SET (17/18)		1	
21	0031	86752A1	BEARING ASSEMBLY Tapered Roller		1	
22	0015	87157A1	SHIM KIT		AR	
23	0044	840377T	PROPELLER SHAFT		1	
24	0012	42256	THRUST WASHER (.105 Inch Thick)		1	
25	0000	840372A2	CARRIER ASSEMBLY Bearing		1	
26	0031	812767A1	BEARING ASSEMBLY Tapered Roller		1	
27	0000	67440T	LOAD RING		1	
28	0025	31534	O-RING		1	
29	0026	815565	SEAL Oil		2	
30	0022	67892A1	FITTING KIT Magnetic, Plug Fill/Drain		1	
31	0012	191832	WASHER Sealing		1	
32	0097	806188A1	ANODE ASSEMBLY		1	[1]
33	0013	69432	LOCKWASHER External (#10)		2	
34	0010	806290	SCREW (#10-32 x .625)		2	
35	0014	18323	TAB WASHER Keyed		1	
36	0000	79448	RETAINER Bearing Carrier		1	
37	0000	840389K5	HUB KIT Propeller		1	[2]
38		NSS	NOT SOLD SEPARATE Propeller Hub		1	
39	0012	840383A2	WASHER/NUT KIT		1	
40	0011	52707Q1	PROP NUT KIT (.750-16)		1	[3]
41	0000	840382A1	SNUBBER STRIP KIT		1	
42	0000	842825T01	SPLASH PLATE KIT	Design II - Aluminum	1	
42	0000	843042T03	SPLASH PLATE KIT	Design III - Stainless Steel	1	
43	0011	82670910	NUT (.312-18) Stainless Steel		2	
44	0012	814806	WASHER (.344 x .688 x .065) Stainless Steel		2	
45	0023	844105	SPACER	Design II (.300 Thick x .343 x .750)	2	
45	0023	843043	SPACER	Design III (.320 Thick x .343 x .750)	2	
46	0010	842831	SCREW (.312-18 x 1.25)		2	

Gear Housing (Bravo I XR/SportMaster)(0M955633 and Below)

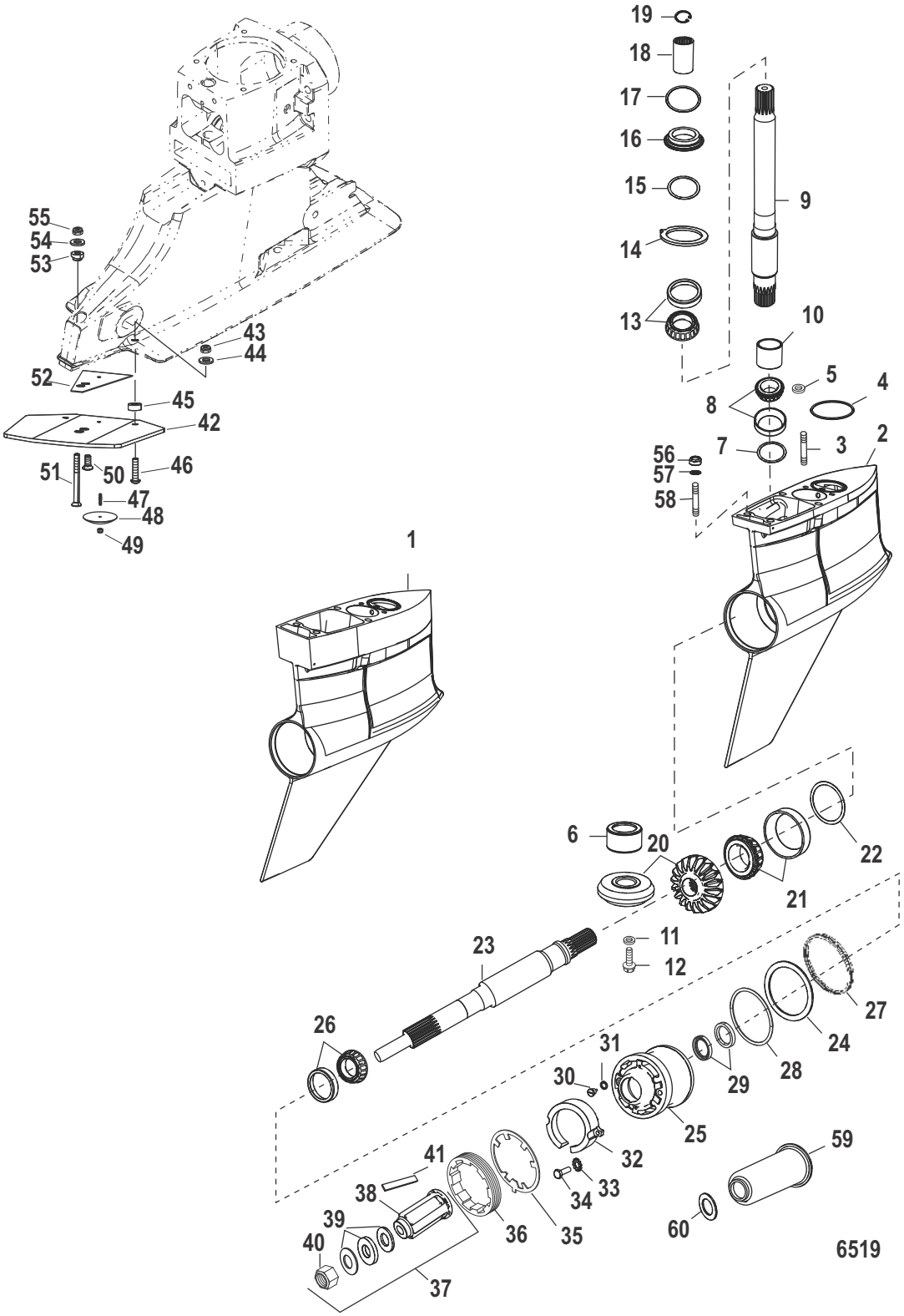

Cat.# 90-891749001

Gear Housing (Bravo I XR/SportMaster)(0M955633 and Below)

Ref #	Part Class	Part Number	Description	Comments	Qty	Note
47	0016	21085	STUD (#10-32 x .930)		1	
48	0000	847332	ANODE		1	
49	0011	8267096	NUT (#10-32) Stainless Steel		1	
50	0010	841031	SCREW (.437-14 x 1.00)		1	
51	0010	842827	SCREW (.437-14 x 4.00)	Design II	1	
51	0010	842952	SCREW (.437-14 x 4.25)	Design III	1	
52	0027	842826	GASKET Splash Plate		1	
53	0023	842828	BUSHING	Design II - .310 x 10 Degree	1	
53	0023	842953	BUSHING	Design III - .530 x 22 Degree	1	
54	0012	35935	WASHER (.435 x .875 x .105) Stainless Steel		1	
55	0011	826709014	NUT (.437-14) Stainless Steel		1	
56	0011	35053	NUT (.437-20)		6	
57	0012	861854	WASHER (.453 x .750 x .032) Stainless Steel		6	
58	0016	579203	STUD (.437-14/.437-20 x 2.060)	Short Style Models	4	
58	0016	841024001	STUD (.437-14/.437-20 x 4.250)	Long Style Models	4	
59	0000	8480611	COVER Propshaft		1	
60	0012	85344	WASHER (.750 Inside Diameter)		1	
-	0000	843122T01	FLUSH ATTACHMENT	With Bungee Cord - Orange	1	
-	0026	815565A02	SEAL KIT Gear Housing		1	

PART NOTES:

[1] - Alternate part numbers:

806188A 1Service Part

806188A 2Magnesium

806188K01MPP

806188Q01QS

[2] - Alternate part numbers:

840389K06MPP

840389K 5Service Part

840389Q06QS

[3] - Alternate part numbers:

52707A 1Service Part

52707Q 1QS

52707T 1MPP

827614BBulk Pack

Gear Housing (Bravo I XR/SportMaster/Sport)(0M955634 and Up)

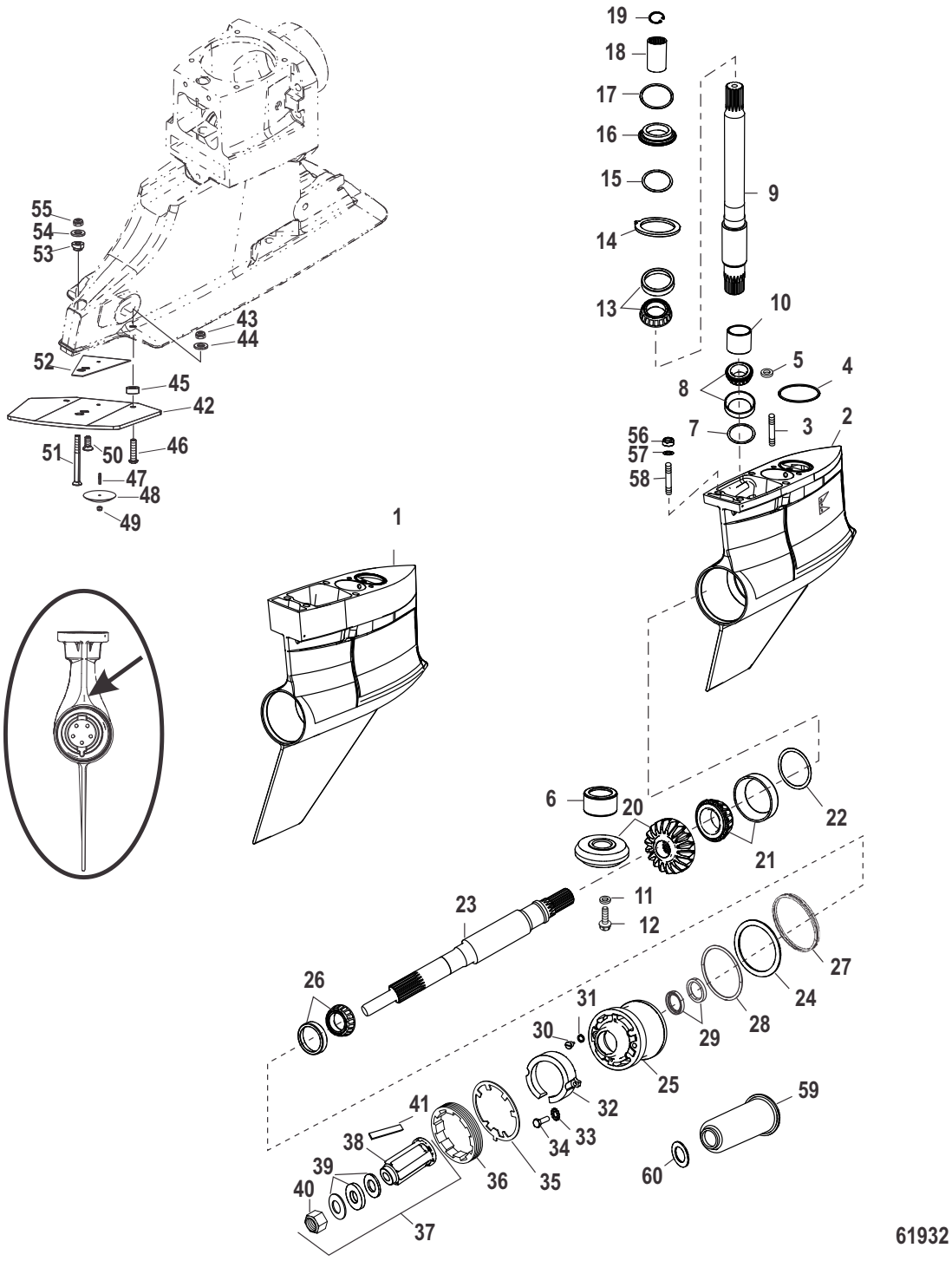

Cat.# 90-891749001

Gear Housing (Bravo I XR/SportMaster/Sport)(0M955634 and Up)

Ref #	Part Class	Part Number	Description	Comments	Qty	Note
-	1600	883608T49	GEAR HOUSING ASSEMBLY Complete	(17/18 Long Style) Number 1 Stamped Above The Propshaft Opening [0M955634] & Up	1	
-	1600	883608T50	GEAR HOUSING ASSEMBLY Complete	(17/18 Short Style) Number 1 Stamped Above The Propshaft Opening [0M955634] & Up	1	
-	1600	883608T51	GEAR HOUSING ASSEMBLY Complete	(15/17 Long Style) Number 1 Stamped Above The Propshaft Opening [0M955634] & Up	1	
-	1600	883608T52	GEAR HOUSING ASSEMBLY Complete	(15/17 Short Style) Number 1 Stamped Above The Propshaft Opening [0M955634] & Up	1	
-	1600	883608T53	GEAR HOUSING ASSEMBLY Complete	(15/19 Long Style) Number 1 Stamped Above The Propshaft Opening [0M955634] & Up	1	
-	1600	883608T54	GEAR HOUSING ASSEMBLY Complete	(15/19 Short Style) Number 1 Stamped Above The Propshaft Opening [0M955634] & Up	1	
-	1600	8M0091429	GEAR HOUSING ASSEMBLY Complete	(15/17) (1.35:1) (Sport)	1	
-	1600	8M0091432	GEAR HOUSING ASSEMBLY Complete	(15/19) (1.50:1) (Sport)	1	
1	1600	883608T55	GEAR HOUSING ASSEMBLY Basic	- Long Style - Number 1 Stamped Above The Propshaft Opening [0M955634] & Up	1	
1	1600	883608T56	GEAR HOUSING ASSEMBLY Basic	- Short Style - Number 1 Stamped Above The Propshaft Opening [0M955634] & Up	1	
2	1600	8M0091435	GEAR HOUSING ASSEMBLY Basic	Sport	1	
3	0016	579203	STUD (.437-14/.437-20 x 2.060)		2	
4	0025	33465	O-RING		1	
5	0026	455771	SEAL Quad Ring		1	
6	0031	86754T	BEARING ASSEMBLY Roller Needle		1	
7	0015	92914A1	SHIM KIT		AR	
8	0031	66668A1	BEARING ASSEMBLY Tapered Roller		1	
9	0045	858517A3	DRIVESHAFT ASSEMBLY (16.085 Long)	Long Style Models	1	
9	0045	840979T1	DRIVESHAFT ASSEMBLY (14.085 Long)	Short Style Models	1	
10	0031	815901	RACE Bearing		1	
11	0012	805068	WASHER		1	
12	0010	808027	SCREW		1	
13	0031	86748A1	BEARING ASSEMBLY Tapered Roller		1	

Gear Housing (Bravo I XR/SportMaster/Sport)(0M955634 and Up)

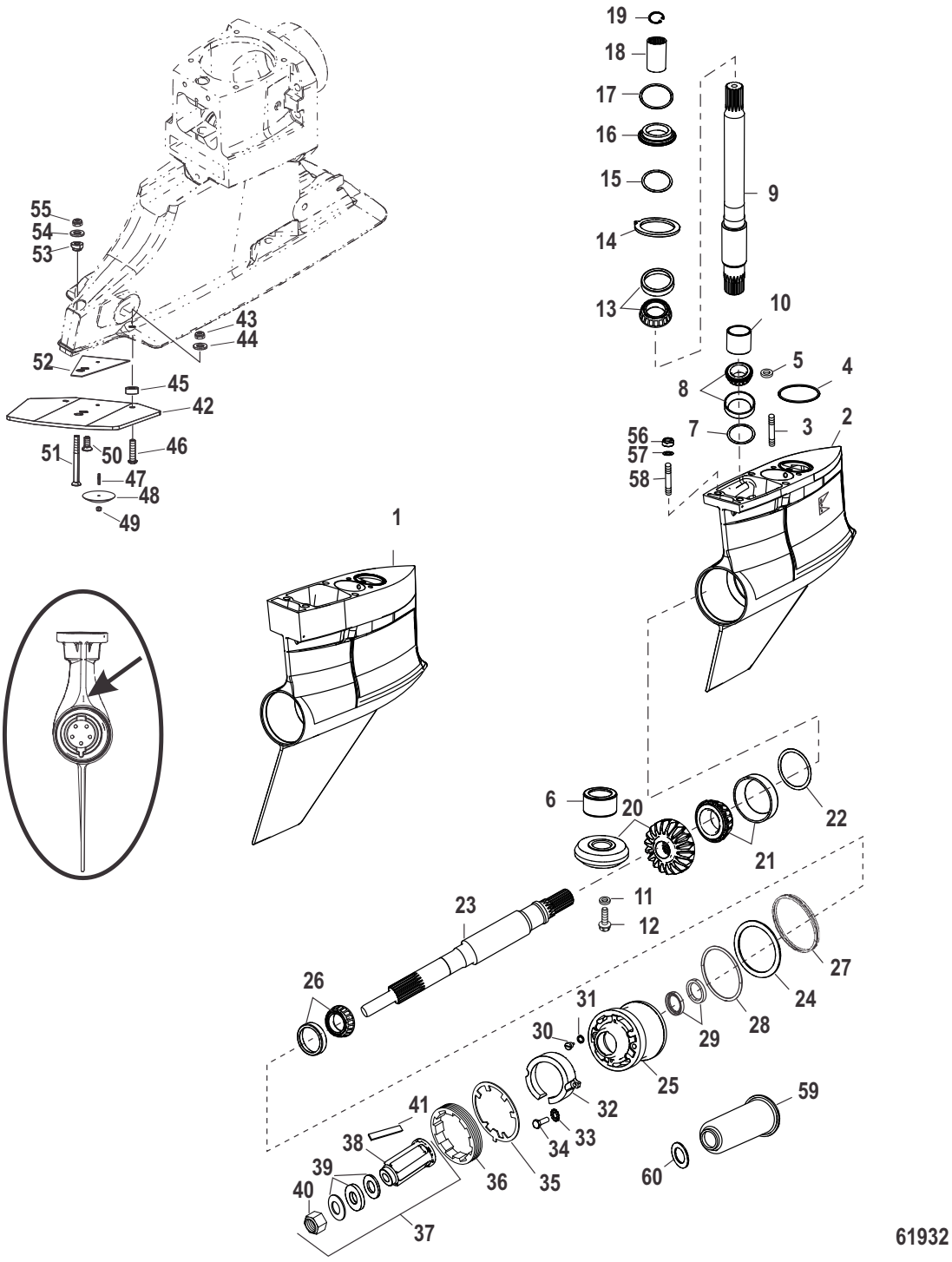

Cat.# 90-891749001

Gear Housing (Bravo I XR/SportMaster/Sport)(0M955634 and Up)

Ref #	Part Class	Part Number	Description	Comments	Qty	Note
14	0014	86739	TAB WASHER		1	
15	0015	86749A1	SHIM KIT		AR	
16	0023	92916	SPACER		1	
17	0025	20826	O-RING (2.230 x .139)		1	
18	0000	88243A3	COUPLING ASSEMBLY		1	
19	0053	88242	RING Retaining		1	
20	0043	818928A2	GEAR SET (15/19)		1	
20	0043	840872A1	GEAR SET (15/17)		1	
20	0043	840870A1	GEAR SET (17/18)		1	
21	0031	86752A1	BEARING ASSEMBLY Tapered Roller		1	
22	0015	87157A1	SHIM KIT		AR	
22	0015	F9283	SHIM (.003)		OPT	
23	0044	840377T	PROPELLER SHAFT		1	
24	0012	42256	THRUST WASHER (.105 Inch Thick)		1	
25	0000	840372A2	CARRIER ASSEMBLY Bearing		1	
26	0031	812767A1	BEARING ASSEMBLY Tapered Roller		1	
27	0000	67440T	LOAD RING		1	
28	0025	31534	O-RING		1	
29	0026	815565	SEAL Oil		2	
30	0022	67892A06	PLUG KIT Drain - Magnetic		1	
31	0026	830749	SEAL		1	
32	0097	806188A1	ANODE ASSEMBLY		1	[1]
33	0013	69432	LOCKWASHER External (#10)		2	
34	0010	806290	SCREW (#10-32 x .625)		2	
35	0014	18323	TAB WASHER Keyed		1	
36	0000	79448	RETAINER Bearing Carrier		1	
37	0000	840389K5	HUB KIT Propeller		1	[2]
38		NSS	NOT SOLD SEPARATE Propeller Hub		1	
39	0012	840383A2	WASHER/NUT KIT		1	
40	0011	52707Q1	PROP NUT KIT (.750-16)		1	[3]
41	0000	840382A1	SNUBBER STRIP KIT		1	
42	0000	843042T03	SPLASH PLATE KIT Stainless Steel		1	
43	0011	82670910	NUT (.312-18) Stainless Steel		2	
44	0012	814806	WASHER (.344 x .688 x .065) Stainless Steel		2	
45	0023	843043	SPACER (.320 Thick x .343 x .750)		2	
46	0010	842831	SCREW (.312-18 x 1.25)		2	
47	0016	21085	STUD (#10-32 x .930)		1	
48	0000	847332	ANODE		1	
49	0011	8267096	NUT (#10-32) Stainless Steel		1	
50	0010	841031	SCREW (.437-14 x 1.00)		1	
51	0010	842952	SCREW (.437-14 x 4.25)		1	

Gear Housing (Bravo I XR/SportMaster/Sport)(0M955634 and Up)

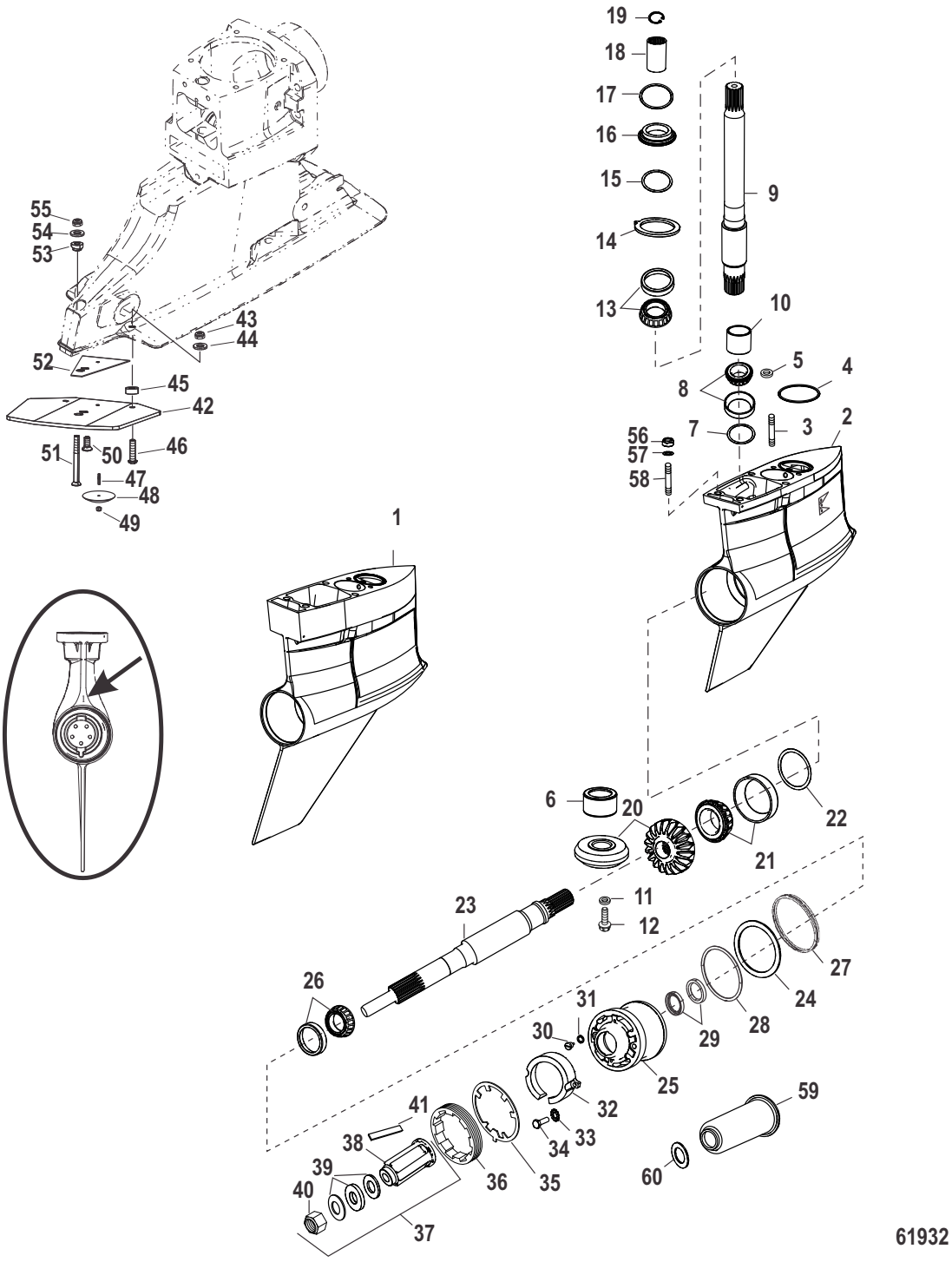

Cat.# 90-891749001

Gear Housing (Bravo I XR/SportMaster/Sport)(0M955634 and Up)

Ref #	Part Class	Part Number	Description	Comments	Qty	Note
52	0027	842826	GASKET Splash Plate		1	
53	0023	842953	BUSHING		1	
54	0012	35935	WASHER (.435 x .875 x .105) Stainless Steel		1	
55	0011	826709014	NUT (.437-14) Stainless Steel		1	
56	0011	35053	NUT (.437-20)		6	
57	0012	861854	WASHER (.453 x .750 x .032) Stainless Steel		6	
58	0016	579203	STUD (.437-14/.437-20 x 2.060)	Short Style Models	4	
58	0016	841024001	STUD (.437-14/.437-20 x 4.250)	Long Style Models	4	
58	0016	8M0034453	STUD (7/16 x 2.19)	XR Sport Only	4	
59	0000	8480611	COVER Propshaft		1	
60	0012	85344	WASHER (.750 Inside Diameter)		1	
-	0000	843122T01	FLUSH ATTACHMENT	With Bungee Cord - Orange	1	
-	0026	815565A02	SEAL KIT Gear Housing		1	

PART NOTES:

[1] - Alternate part numbers:

806188A 1Service Part

806188A 2Magnesium

806188K01MPP

806188Q01QS

[2] - Alternate part numbers:

840389K06MPP

840389K 5Service Part

840389Q06QS

[3] - Alternate part numbers:

52707A 1Service Part

52707Q 1QS

52707T 1MPP

827614BBulk Pack

Trim Cylinders and Hydraulic Hoses (Standard Transoms)

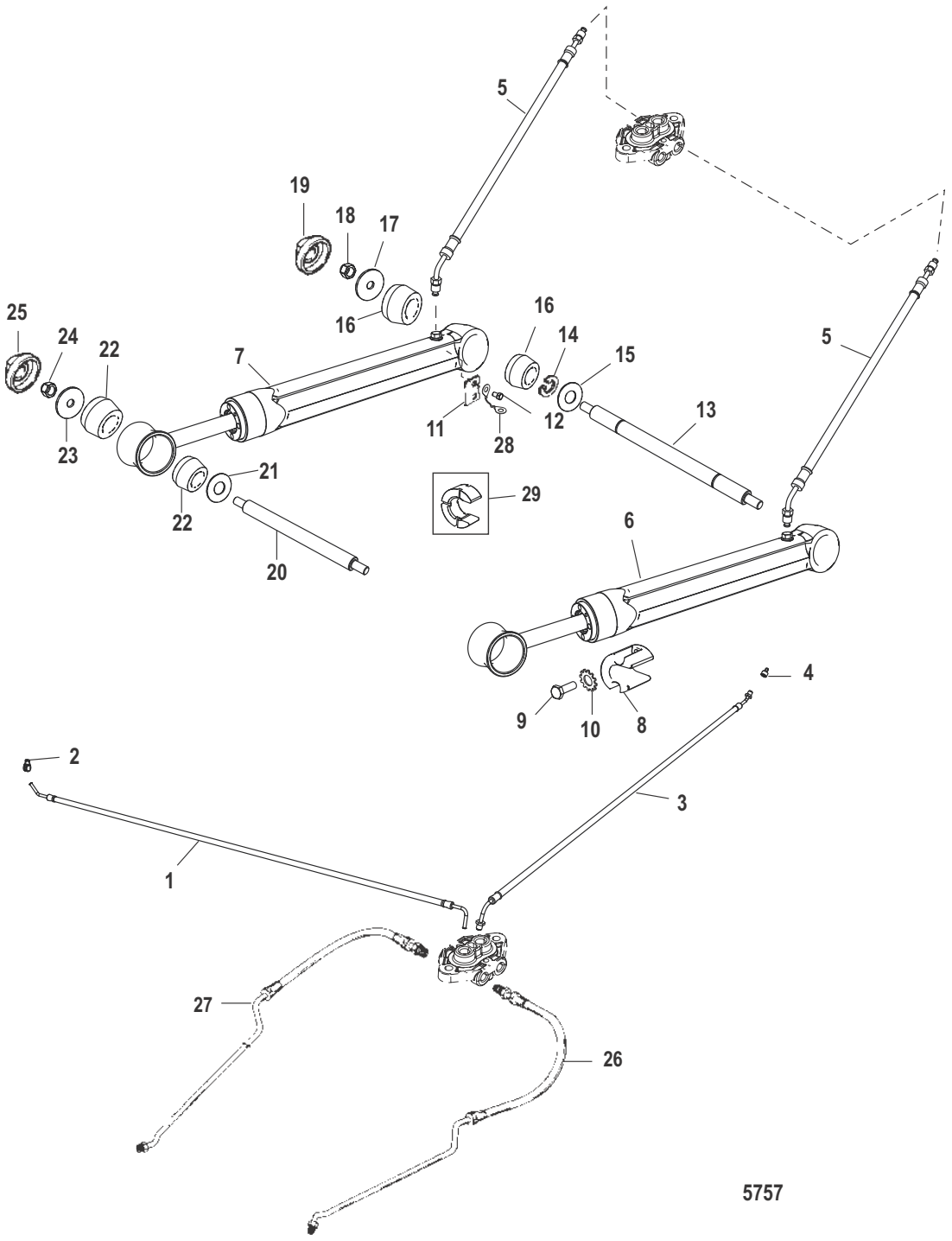

RESOURCE NOTES:

NOTE: SEE "POWER TRIM CYLINDER REPAIR KITS" FOR BREAKDOWN

Cat.# 90-891749001

Trim Cylinders and Hydraulic Hoses (Standard Transoms)

Ref #	Part Class	Part Number	Description	Comments	Qty	Note
1	0032	865384001	HOSE Black Hydraulic Manifold to Pump		1	
2	0022	865410001	FITTING Female Quick Connect		1	
3	0032	865385001	HOSE Gray Hydraulic Manifold to Pump		1	
4	0022	865411001	FITTING Male Quick Connect		1	
5	0032	99904	HOSE Trim Cylinder To Connector		2	[1]
6	0000	98704A26	TRIM CYLINDER ASSEMBLY Starboard	(See Power Trim Cylinder Repair Kits For Breakdown)	1	
6	0000	866464A02	TRIM CYLINDER ASSEMBLY Starboard	(SEACORE)(See Power Trim Cylinder Repair Kits For Breakdown)	1	
7	0000	98703A26	TRIM CYLINDER ASSEMBLY Port	(See Power Trim Cylinder Repair Kits For Breakdown)	1	
7	0000	866465A02	TRIM CYLINDER ASSEMBLY Port	(SEACORE)(See Power Trim Cylinder Repair Kits For Breakdown)	1	
NS	0000	87399A2	OVERHAUL KIT	[2A480243] & Below	2	
NS	0025	87400A2	SEAL KIT	[2A480243] & Below	2	
8	0097	806190Q1	ANODE ASSEMBLY		2	[2]
9	0010	806290	SCREW (#10-32 x .625)		4	
10	0013	69432	LOCKWASHER External (#10)		4	
11	0000	85060	PLATE		2	
12	0010	85486	SCREW (.250-20 x .380) Stainless Steel		4	[3]
13	0017	44167A1	PIN Front Anchor		1	
14	0053	805272	RING Retaining		2	
15	0012	44164	WASHER		2	
16	0023	807073	BUSHING		4	
17	0012	44163	WASHER (.450 x 1.75 x .12)		2	
18	0011	34933	NUT (.437-20) Stainless Steel		2	
19	0019	14842	CAP		2	
20	0017	44166	PIN Rear Anchor		1	[4]
21	0012	44164	WASHER		2	
22	0023	807073	BUSHING		4	
23	0012	44163	WASHER (.450 x 1.75 x .12)		2	
24	0011	34933	NUT (.437-20) Stainless Steel		2	
25	0019	14842	CAP		2	
26	0032	99902	HOSE Trim Cylinder	(Starboard)	1	
27	0032	99903	HOSE Trim Cylinder	(Port)	1	
28	0000	88238A13	CABLE ASSEMBLY Ground		2	[3]
29	0000	15768A3	SPACER KIT TILT		1	

Trim Cylinders and Hydraulic Hoses (Standard Transoms)

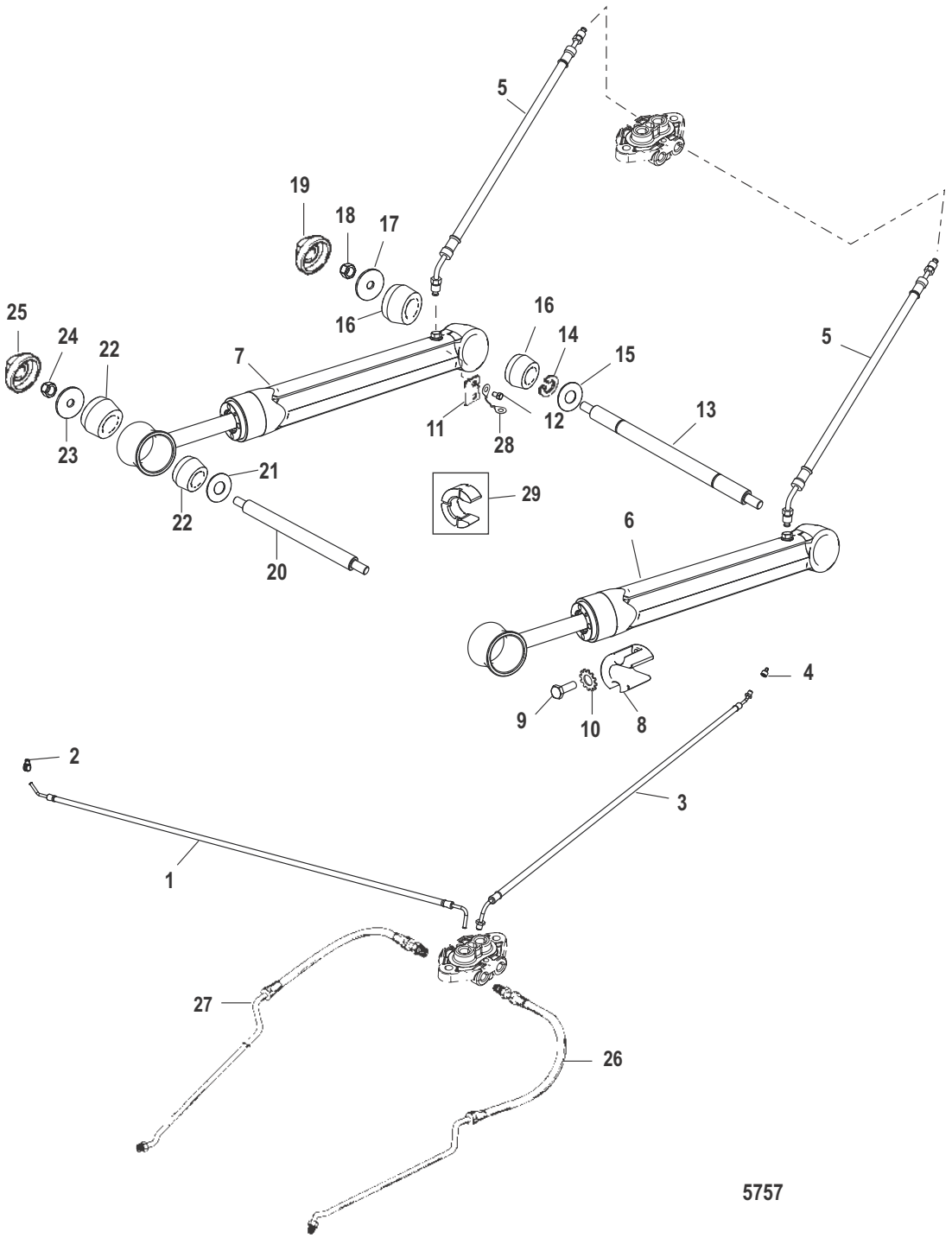

Cat.# 90-891749001

Trim Cylinders and Hydraulic Hoses (Standard Transoms)

PART NOTES:

[1] - Alternate part numbers:

99904Service Part

99904KMPP

99904QQS

[2] - Alternate part numbers:

806190A 1Service Part

806190A 2Magnesium

806190Q 1QS

806190T 1MPP

8M0059342Bulk Pack

[3] - COMPONENT OF CONTINUITY KIT 99940A 2

[4] - Alternate part numbers:

44166Service Part

44166T 1Kit

Trim Cylinder Components S/N 2A480243 and Below

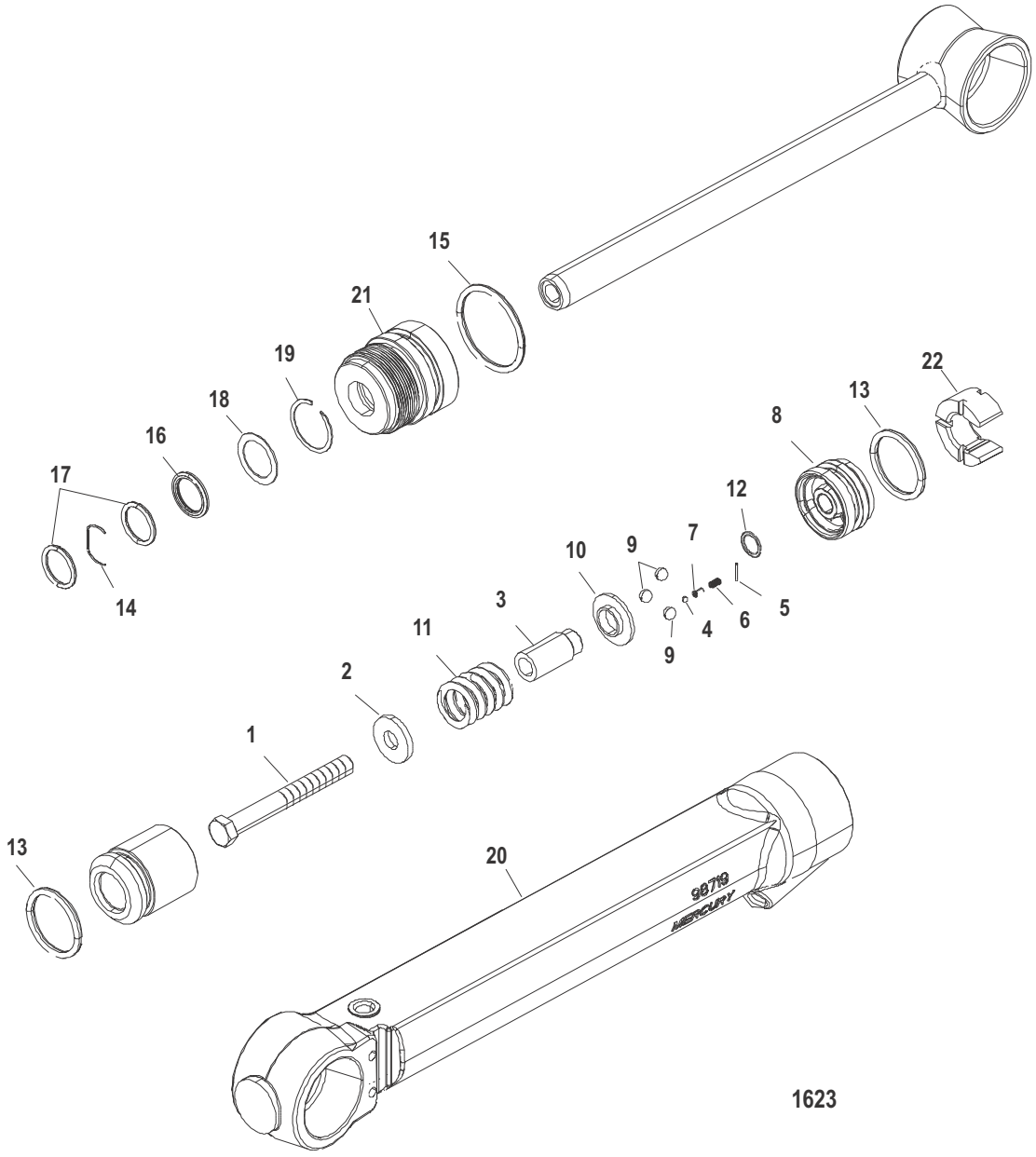

RESOURCE NOTES:

DO NOT SUBSTITUTE O-RINGS AS THESE ARE OF SPECIAL MANUFACTURED MATERIAL

Cat.# 90-891749001

Trim Cylinder Components S/N 2A480243 and Below

Ref #	Part Class	Part Number	Description	Comments	Qty	Note
_	0000	87399A2	OVERHAUL KIT		1	
1		NSS	NOT SOLD SEPARATE SCREW (M10 x 85)		1	
2		NSS	NOT SOLD SEPARATE WASHER		1	
3		NSS	NOT SOLD SEPARATE GUIDE		1	
4		NSS	NOT SOLD SEPARATE BALL-Steel (.109 Diameter)		1	
5		NSS	NOT SOLD SEPARATE PIN		1	
6		NSS	NOT SOLD SEPARATE SPRING		1	
7		NSS	NOT SOLD SEPARATE EYELET		1	
8		NSS	NOT SOLD SEPARATE PISTON		1	
9		NSS	NOT SOLD SEPARATE BALL (.250 Diameter)		3	
10		NSS	NOT SOLD SEPARATE PUSHER		1	
11		NSS	NOT SOLD SEPARATE SPRING		1	
-	0025	87400A2	SEAL KIT		1	
12		NSS	NOT SOLD SEPARATE O RING		1	
13		NSS	NOT SOLD SEPARATE O RING		2	
14		NSS	NOT SOLD SEPARATE SPRING		1	
15		NSS	NOT SOLD SEPARATE O RING		1	
16		NSS	NOT SOLD SEPARATE SCRAPER ROD		1	
17		NSS	NOT SOLD SEPARATE O RING		2	
18		NSS	NOT SOLD SEPARATE WASHER		1	
19		NSS	NOT SOLD SEPARATE RING-Retaining		1	
20	0000	98703T	TUBE Port Cylinder	(CASTING # 98703 OR 98718)	1	
20	0000	98704T	TUBE Starboard Cylinder	(CASTING # 98704 OR 98719)	1	
21	0000	806191T	CAP		2	
22	0000	15768A3	SPACER KIT		1	

Trim Pump Assembly (Complete)

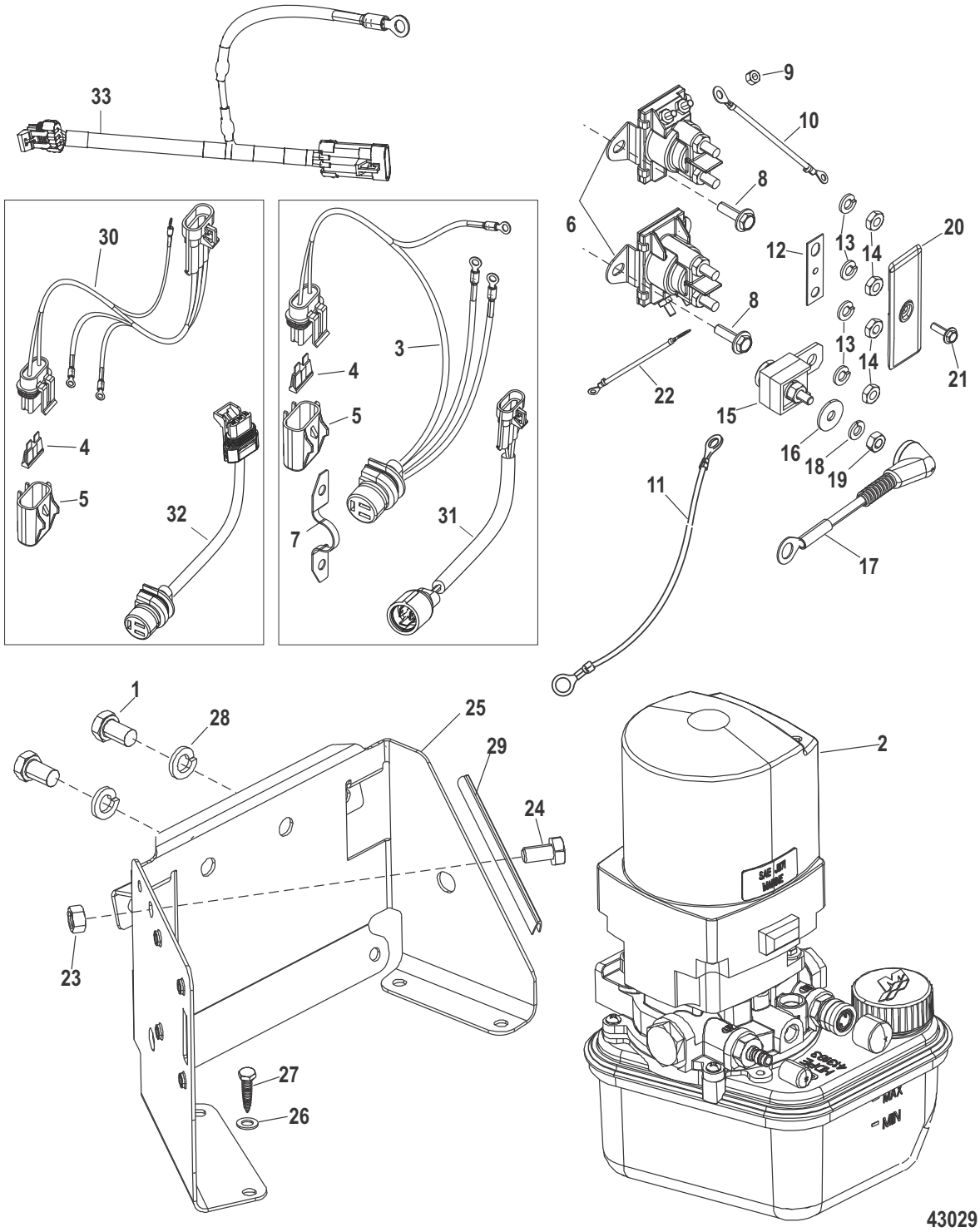

Cat.# 90-891749001

Trim Pump Assembly (Complete)

Ref #	Part Class	Part Number	Description	Comments	Qty	Note
-	0000	865380A15	PUMP ASSEMBLY Trim - Complete		1	
1	0010	98260	SCREW (.375-16 x .620)		2	
2	0000	865380A13	PUMP/MOTOR ASSEMBLY Trim - 12 Volt		1	
3	0084	79147A08	HARNESS ASSEMBLY With Molded Connector		1	
4	0088	812619	FUSE Yellow - 20 Ampere		1	
5	0000	828054	COVER Fuse		1	
6	0089	96158T	SOLENOID		2	
7	0000	88075	RETAINER		1	
8	0010	41508	SCREW (.250-20 x .500) Stainless Steel		4	
9	0011	26419	NUT (#8-32) Brass		4	
10	0084	86322A24	CABLE ASSEMBLY (4.00 Inches)		1	
11	0084	79138A9	CABLE ASSEMBLY (6.00 Feet) Black-Negative Negative - Battery		1	
12	0000	94275	LINK Connector		1	
13	0013	26992	LOCKWASHER (.250) Stainless Steel		4	
14	0011	94330	NUT (.250-20) Brass		4	
15	0088	79023A10	FUSE ASSEMBLY 110 Ampere		1	
16	0012	25908	WASHER (.265 x .812 x .0625)		1	
17	0084	79139A12	CABLE ASSEMBLY Red-Positive Positive - Battery		1	
18	0013	26992	LOCKWASHER (.250) Stainless Steel		1	
19	0011	21825	NUT (.250-28)		1	
20	0085	861680	INSULATOR		1	
21	0010	48409	SCREW (#10-16 x .625) Stainless Steel		1	
22	0084	86322A15	CABLE ASSEMBLY (5.50 Inches) Black		1	
23	0011	68292	NUT (.312-18)		1	
24	0010	90285	SCREW (.312-18 x .625)		1	
25	0000	862548A1	BRACKET KIT	(Floor or Transom Mounted)	1	
26	0012	29245	WASHER (.281 x .500 x .060) Stainless Steel		4	
27	0010	59784	SCREW (.250-10 x 1.00)		4	
28	0013	35048	LOCKWASHER (.375)		2	
29	0000	58491	CHANNEL Rubber (4.00 Inches)		2	
30	0084	79147A09	HARNESS ASSEMBLY With Packard Connector	(Includes Fuse and Cover)	1	
31	0084	865770A02	HARNESS ASSEMBLY Adapter - Molded 3 Pin Female To Packard 3 Pin Female		AR	
32	0084	865771A02	HARNESS ASSEMBLY Adapter - Molded 3 Pin Male To Packard 3 Pin Male		AR	
33	0000	8M8025133	ADAPTER KIT Transient Voltage Suppressor		1	

Trim Pump and Motor Components

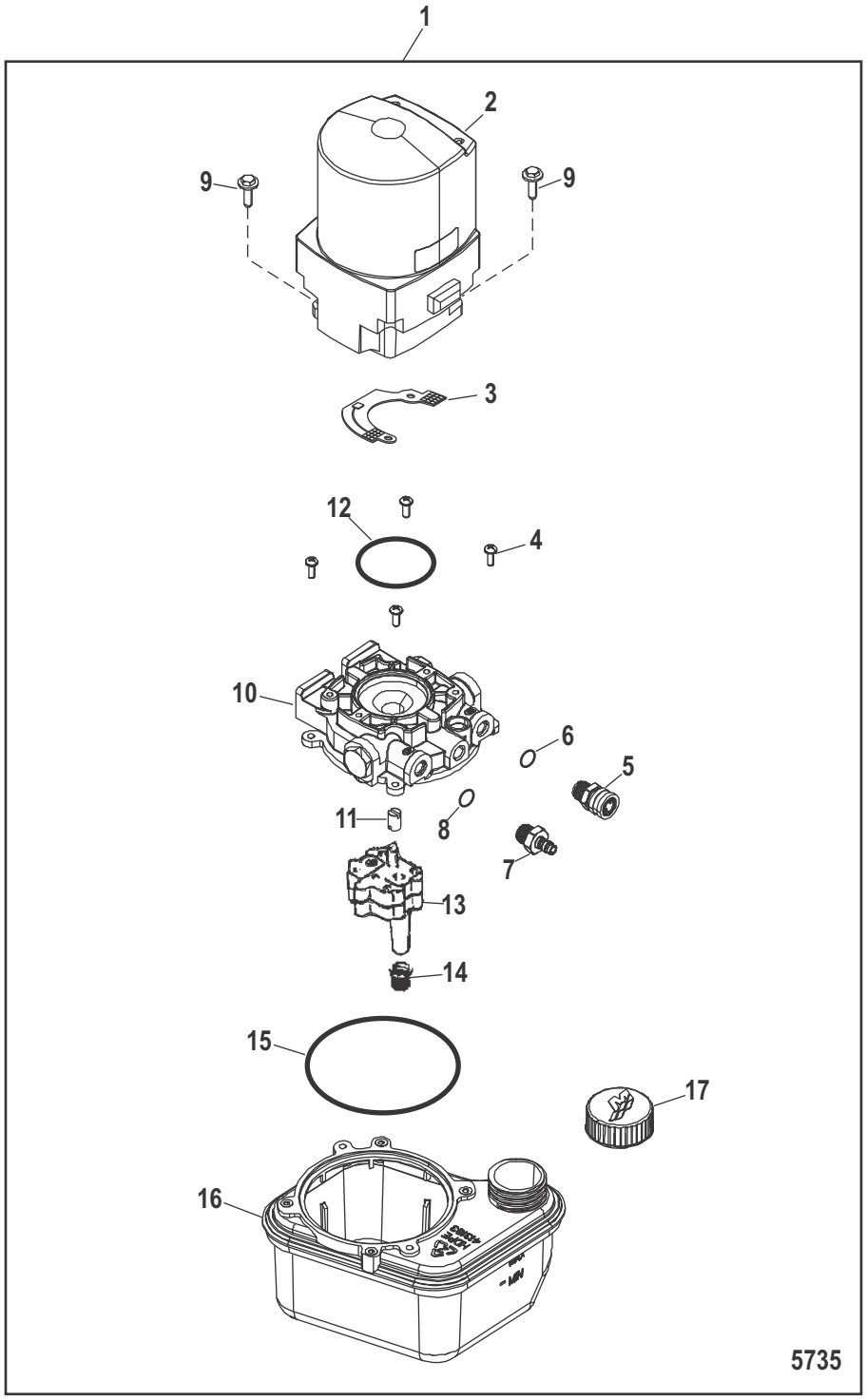

Cat.# 90-891749001

Trim Pump and Motor Components

Ref #	Part Class	Part Number	Description	Comments	Qty	Note
1	0000	865380A13	PUMP/MOTOR ASSEMBLY Trim - 12 Volt		1	
2	0000	891736T	MOTOR ASSEMBLY Complete		1	
3	0000	892608	BOARD ASSEMBLY Circuit - Radio Frequency Interference Filter		1	
4	0010	883167	SCREW (#8-32)		4	
5	0022	865413001	FITTING Stainless Steel Female Quick Connect		1	
6	0025	891868	O-RING		1	
7	0022	865412001	FITTING Stainless Steel Male Quick Connect		1	
8	0025	891868	O-RING		1	
9	0010	823444	SCREW		2	
10	0000	808728T	ADAPTER ASSEMBLY		1	
11	0000	803852	COUPLING		1	
12	0025	89498	O-RING Motor End		1	
13	0000	18529	PUMP ASSEMBLY Includes Screws		1	
14	0035	89496	FILTER		2	
15	0025	17645	O-RING Reservoir End		1	
16	0000	883166A2	RESERVOIR KIT With Filters and O-Ring	(Ref 14 and Ref 15)	1	
17	0036	861597	CAP Standard		1	
17	0036	865448A01	CAP Oil Reservoir Rough Water Application		OPT	
NS	0000	812498A1	VALVE KIT Relief Up Pressure		1	
NS	0000	812499A1	VALVE KIT Relief Down Pressure		1	
NS	0000	95353A1	VALVE KIT Thermal Relief		1	
NS	0000	18545A1	REPAIR KIT		1	
NS	0000	891737	BRUSH KIT		1	

Power Steering Actuator (Magnum And Hi-Performance Transom)

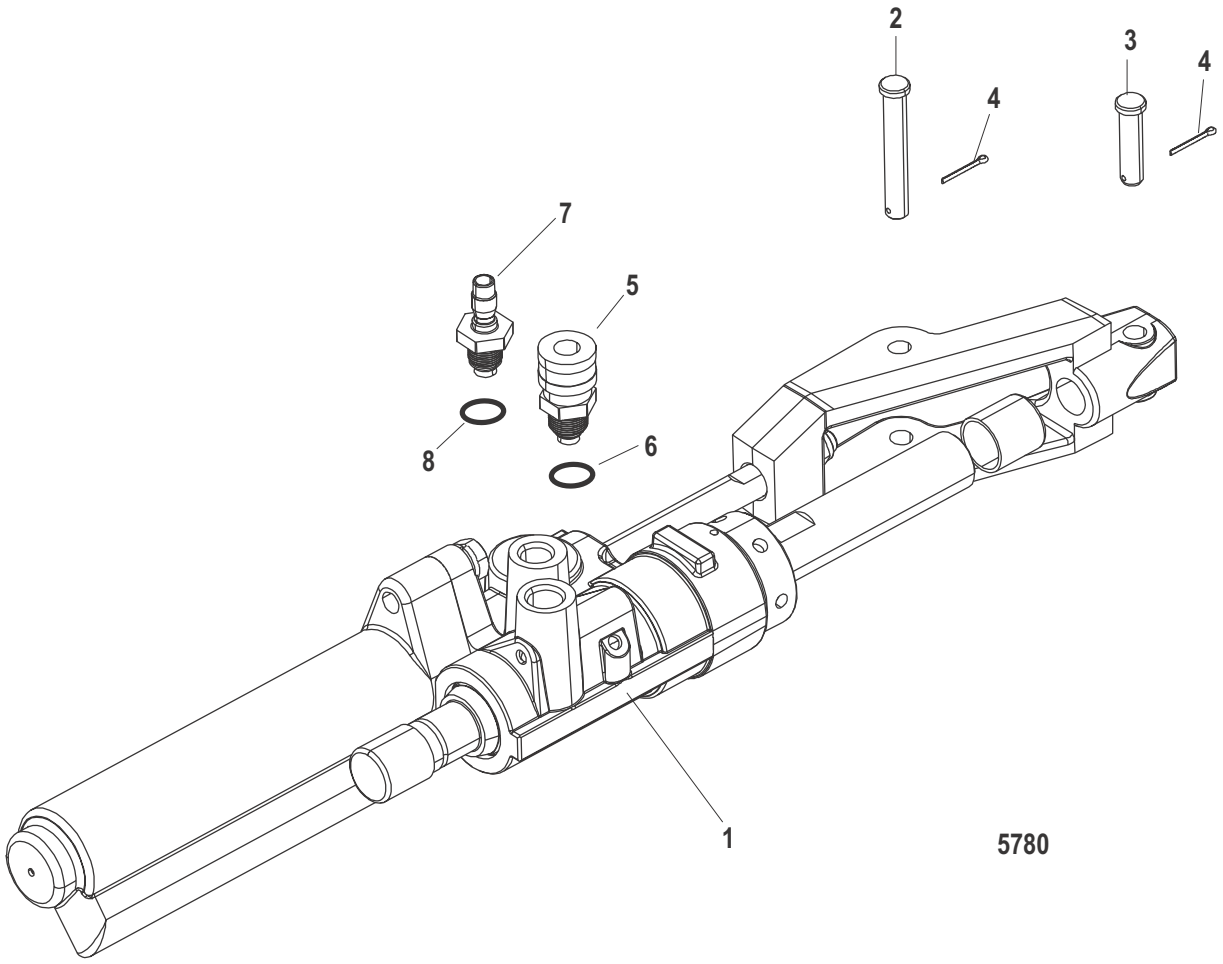

Cat.# 90-891749001

Power Steering Actuator (Magnum And Hi-Performance Transom)

Ref #	Part Class	Part Number	Description	Comments	Qty	Note
1	0000	865383A02	ACTUATOR ASSEMBLY Steering (Component Parts Not Sold Seperate)		1	
2	0017	15878	PIN Clevis Long		1	
3	0017	16419	PIN Clevis Short		1	
4	0018	46950	COTTER PIN		2	
5	0022	865415	FITTING Female Quick Connect		1	
6	0025	89879	O-RING (.301 x .064)		1	
7	0022	865414	FITTING Male Quick Connect		1	
8	0025	806232	O-RING (.239 x .064)		1	

Power Steering Actuator (Integrated Transom)

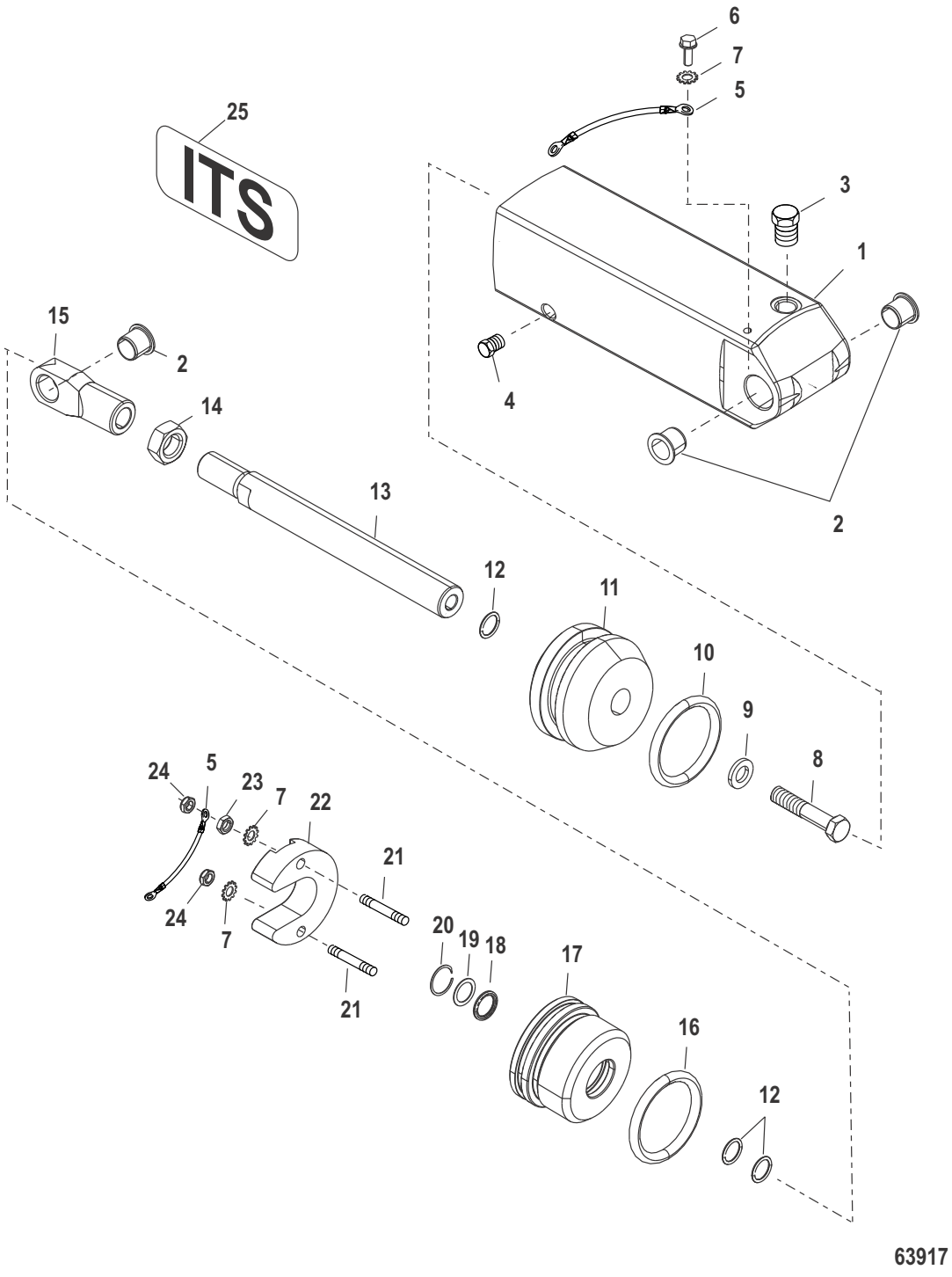

Cat.# 90-891749001

Power Steering Actuator (Integrated Transom)

Ref #	Part Class	Part Number	Description	Comments	Qty	Note
1	0000	845760T3	CYLINDER ASSEMBLY Steering Starboard		1	
1	0000	845760T6	CYLINDER ASSEMBLY Steering Port		1	
2	0023	8159501	BUSHING		3	
3		NSS	NOT SOLD SEPARATE PLUG		1	
4		NSS	NOT SOLD SEPARATE PLUG		1	
5	0000	847062A1	BONDING KIT		2	
6	0010	68513	SCREW (#10-32 x .375) Stainless Steel		1	
7	0013	69432	LOCKWASHER External (#10)		3	
8	0010	35871	SCREW (.375-24 x 1.500)		1	
9	0012	27880	WASHER		1	
10		NSS	NOT SOLD SEPARATE O-RING-(Component of Seal Kit)		1	
11		NSS	NOT SOLD SEPARATE PISTON		1	
12		NSS	NOT SOLD SEPARATE O-RING-(Component of Seal Kit)		3	
13		NSS	NOT SOLD SEPARATE PISTON ROD		1	
14	0011	845997	NUT (.625-18)		1	
15		NSS	NOT SOLD SEPARATE ROD END		1	
16		NSS	NOT SOLD SEPARATE O RING-(Component of Seal Kit)		1	
17	0000	840768T	END CAP		1	
18		NSS	NOT SOLD SEPARATE ROD SCRAPER-(Component of Seal Kit)		1	
19		NSS	NOT SOLD SEPARATE WASHER-(Component of Seal Kit)		1	
20		NSS	NOT SOLD SEPARATE RING-Retaining-(Component of Seal Kit)		1	
21	0016	840854	STUD (#10-32 x 1.22)		2	
22	0097	806189Q1	ANODE		1	[1]
23	0011	840853	NUT (#10-32) Stainless Steel (Reduced Hex Jam)		1	
24	0011	859124	NUT (#10-32) Stainless Steel Nylon Insert		2	
25	0037	8M0121132	DECAL ITS	[0M97580825] & Up	2	
NS	0025	87298A1	SEAL KIT Steering Cylinder		1	

PART NOTES:

[1] - Alternate part numbers:

806189A 1Service Part

806189A 2Magnesium

806189Q 1QS

806189T 1MPP

8M0059341Bulk Pack

Gimbal Housing Cover

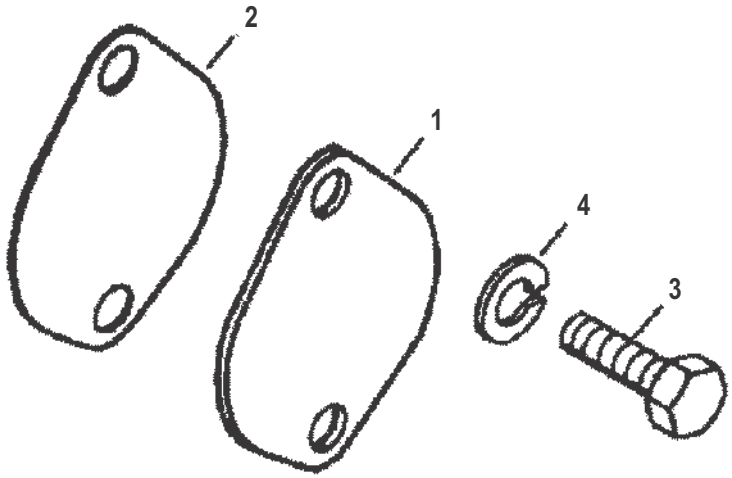

5068

Cat.# 90-891749001

Gimbal Housing Cover

Ref #	Part Class	Part Number	Description	Comments	Qty	Note
1	0000	818304A1	BLOCK OFF KIT		1	
2	0027	818305	GASKET		1	
3	0010	28636	SCREW (.250-20 x .750)		2	
4	0013	26992	LOCKWASHER (.250) Stainless Steel		2	

Mercathode Kit

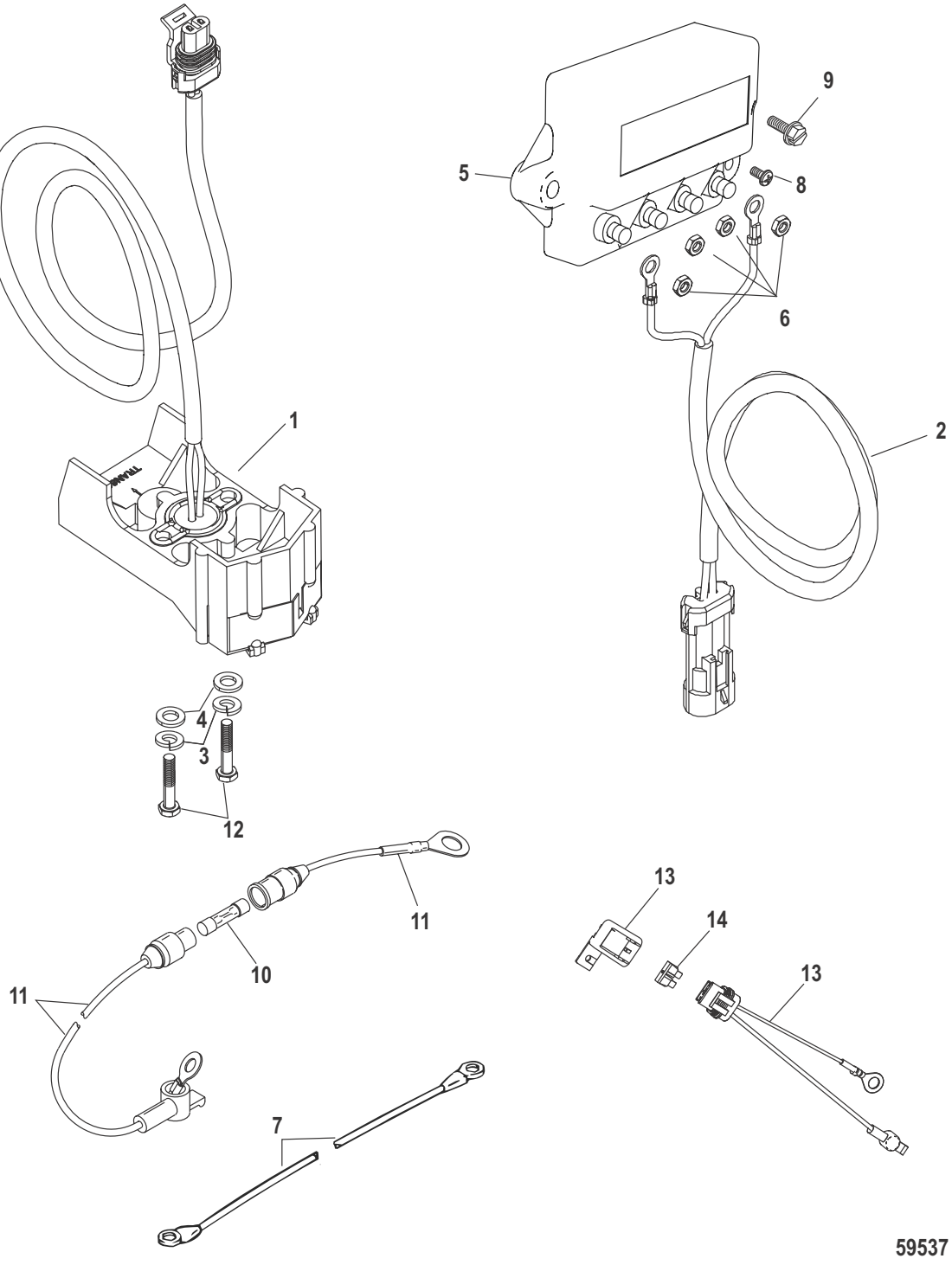

Cat.# 90-891749001

Mercathode Kit

Ref #	Part Class	Part Number	Description	Comments	Qty	Note
1	0000	98869A17	ELECTRODE ASSEMBLY With Quick Connectors		1	
2	0084	865181A01	HARNESS ASSEMBLY Mercathode		1	
3	0013	26992	LOCKWASHER (.250) Stainless Steel		2	
4	0012	29245	WASHER (.281 x .500 x .060) Stainless Steel		2	
5	0000	42600A3	CONTROLLER ASSEMBLY		1	
6	0011	68219	NUT (#10-32) Stainless Steel		4	
7	0084	88543A3	CABLE ASSEMBLY		1	
8	0010	62568	SCREW (#10-16 x .375)		1	
9	0010	4010516	SCREW (M5 x 16) Stainless Steel		2	
10	0088	79091	FUSE 20 Ampere		1	
11	0084	95084A9	CABLE ASSEMBLY (91.00 Inches) Red/Purple Strip		1	
11	0084	95084A10	CABLE ASSEMBLY (5.00 Inches) Red		1	
12	0010	69067	SCREW (.250-20 x 1.375)		2	
13	0084	8M0060271	CABLE ASSEMBLY		1	
14	0000	862646	FUSE Tan - 5 Ampere		1	

Mercathode Kit (Integrated Transom)

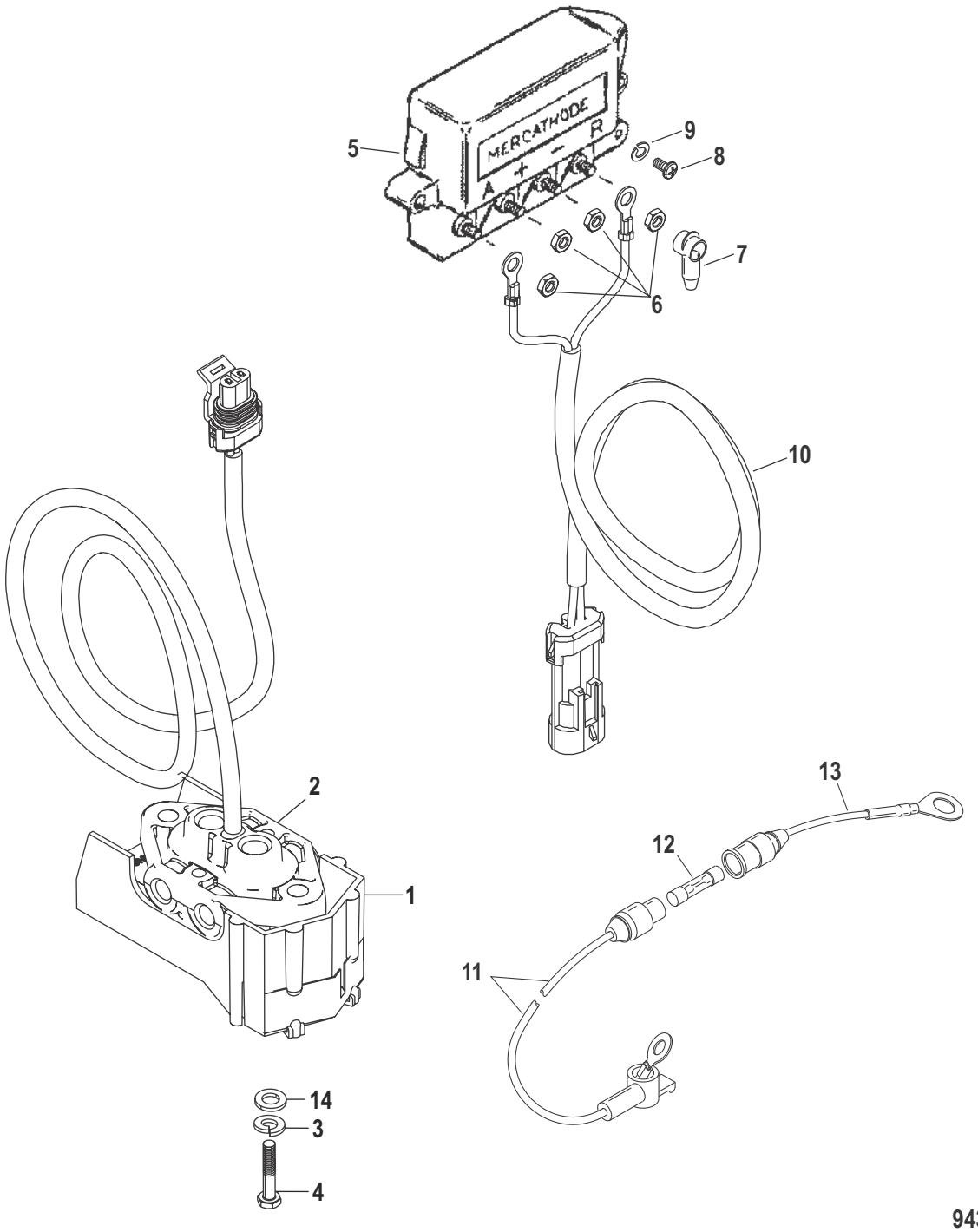

Cat.# 90-891749001

Mercathode Kit (Integrated Transom)

Ref #	Part Class	Part Number	Description	Comments	Qty	Note
1	0000	98869A18	ELECTRODE ASSEMBLY		1	
2	0000	98825A13	COVER KIT		1	
3	0013	26992	LOCKWASHER (.250) Stainless Steel		2	
4	0010	45862	SCREW (#10-32 x .875)		1	
5	0000	42600A3	CONTROLLER ASSEMBLY		1	
6	0011	68219	NUT (#10-32) Stainless Steel		4	
7	0085	65208	BOOT Insulator - Black Insulator		2	
8	0010	62568	SCREW (#10-16 x .375)		1	
9	0013	26996	LOCKWASHER (#10) Stainless Steel		1	
10	0084	865181A01	HARNESS ASSEMBLY Mercathode		1	
11	0084	95084A9	CABLE ASSEMBLY (91.00 Inches) Red/Purple Strip		1	
12	0088	79091	FUSE 20 Ampere		1	
13	0084	95084A10	CABLE ASSEMBLY (5.00 Inches) Red		1	
14	0012	29245	WASHER (.281 x .500 x .060) Stainless Steel		2	

Gear Lube Monitor Components

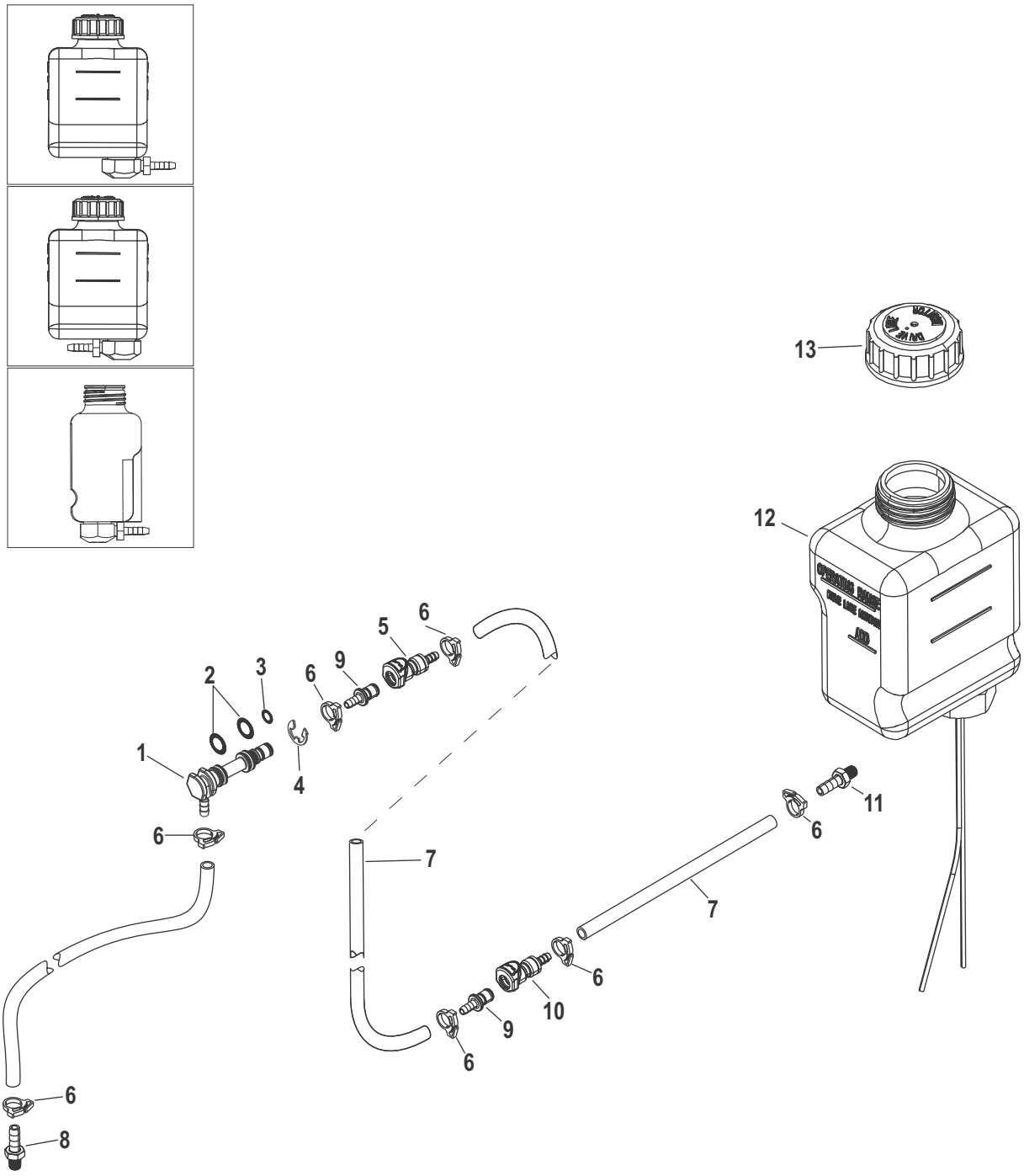

Cat.# 90-891749001

Gear Lube Monitor Components

Ref #	Part Class	Part Number	Description	Comments	Qty	Note
1	0022	861150A2	FITTING ASSEMBLY		1	
2	0025	201951	O-RING (.487 x .103)		2	
3	0025	627021	O-RING (.301 x .070)		1	
4	0053	87843	E RING		1	
5	0022	861163	QUICK CONNECTOR (90 Degree)	Design I	1	
5	0022	865379	FITTING Female	Design II	1	
6	0054	415825	CLAMP Nylon	Design I	AR	
6	0054	415825	CLAMP Nylon	Design II	2	
7	0032	1940971	HOSE (54.00 Inches Bulk) (Cut As Required)		1	
8	0022	16739	CONNECTOR		1	
9	0022	865191	FITTING Male	Design I	1	
9	0022	865191	FITTING Male	Design II	2	
10	0022	865190	CONNECTOR Female		1	
11	0022	808624	CONNECTOR		1	
12	0000	806193A33	MONITOR ASSEMBLY Oil	(Fitting Pointing Toward Right Side Viewed From Front)	1	
12	0000	806193A30	RESERVOIR	(Fitting Pointing Toward Left Side Viewed From Front)	1	
12	0000	806193A37	RESERVOIR	(Fitting Pointing Toward Front Side Viewed From Side)	1	
13	0036	8067271	CAP Drive Lube Monitor		1	

Special Tools (Driveshaft Housing)

Cat.# 90-891749001

Special Tools (Driveshaft Housing)

Ref #	Part Class	Part Number	Description	Comments	Qty	Note
-	0091	38756	ADAPTER TOOL		1	
-	0091	17275A1	DRIVER ASSEMBLY Bearing And Seal		1	
-	0091	813653T	DRIVER Bearing		1	
-	0015	8M0157880	SHIM		1	
-	0091	17273	REMOVAL TOOL Bearing		1	
-	0091	17301T1	STAND TOOL Clutch Assembly		1	
-	0091	90244A1	DRIVER AND PULLER ASSEMBLY		1	
-	0091	817570T	DRIVER TOOL Oil Seal		1	
-	0091	34569A1	PULLER ASSEMBLY Slide Hammer		1	
-	0091	66274	TORQUE WRENCH (0-150 lb-in)		1	
-	0091	17256	WRENCH Bearing Retainer	(STANDARD DRIVE)	1	
-	0091	862219A1	SPANNER WRENCH	(ALL X DRIVES)	1	
-	0091	37241	PULLER PLATE Universal		1	
-	0091	863412	INSTALLATION TOOL Universal Joint Seal		1	

Cat.# 90-891749001

Special Tools (Transom)

Ref #	Part Class	Part Number	Description	Comments	Qty	Note
-	0091	805475A1	ALIGNMENT TOOL ASSEMBLY	(Standard Transom)	1	
-	0091	840965A1	ALIGNMENT TOOL ASSEMBLY	(Integrated Transom)	1	
-	0091	31229A7	PULLER KIT Bearing		1	
-	0091	45497A1	EXPANDER TOOL Bellows		1	
-	0091	17263	LOCATING TOOL Core Wire		1	
-	0091	32325T	DRIVER HEAD TOOL		1	
-	0091	37323	DRIVER ROD TOOL Needle Bearings		1	
-	0091	78310	PIN TOOL Hinge		1	
-	0011	24156	NUT (.625-18)		1	
-	0091	29310	PLATE		2	
-	0091	63616T	PULLER		1	
-	0091	31229	SHAFT		1	
-	0091	17262	ADJUSTMENT TOOL Shift Cable Anchor		1	
-	0091	818162	INSTALLATION TOOL Sleeve		1	
-	0091	818169T	REMOVAL TOOL Sleeve		1	
-	0091	34569A1	PULLER ASSEMBLY Slide Hammer		1	
-	0091	43579	INSERT TOOL Water Hose,Tapered		1	
-	0012	34961	WASHER		1	

Cat.# 90-891749001

Special Tools (Gear Housing Bravo I)

Ref #	Part Class	Part Number	Description	Comments	Qty	Note
-	0091	53459	ROD TOOL Backlash Indicator Flag		1	
-	0091	61069T	NUT TOOL Gear Housing Cover	(Standard Propshaft)	1	
-	0091	90338A1	PULLER TOOL Bearing Carrier		1	
-	0091	840393A1	INSTALLATION TOOL Propeller Shaft		1	
-	0091	840393	WRENCH TOOL Bearing Carrier Retainer	(HI-Performance Propshaft)	1	
-	0091	840388	INSTALLATION TOOL Bearing Carrier		1	
-	0091	840385	INSTALLATION TOOL Seal		1	
-	0091	89867T	DRIVER TOOL Bearing		1	
-	0091	813653T	DRIVER Bearing		1	
-	0091	63638T	DRIVER TOOL Bearing		1	
-	0091	43559T	CLAMP PLATE TOOL		1	
-	0091	89865	DRIVER TOOL Cup And Seal		1	
-	0091	31106T	MANDREL Bearing Driver Cup		1	
-	0091	67443T	DRIVER TOOL Cup		1	
-	0091	58222A1	DIAL INDICATOR TOOL		1	
-	0091	83155	ADAPTER KIT Dial Indicator		1	
-	0091	61077T	ADAPTER TOOL Driveshaft		1	
-	0091	37323	DRIVER ROD TOOL Needle Bearings		1	
-	0091	18605A2	INSTALLATION TOOL Bearing Adaptor		1	
-	0091	42840T	SHIMMING TOOL		1	
-	0091	34569A1	PULLER ASSEMBLY Slide Hammer		1	
-	0091	31229	SHAFT		1	
-	0091	66274	TORQUE WRENCH (0-150 lb-in)		1	
-	0091	37241	PULLER PLATE Universal		1	
-	0091	31229A7	PULLER KIT Bearing	(Includes The Following Indented Items)	1	
-	0091	15755T	NEEDLE BEARING DRIVER		1	
-	0091	38628T	INSTALLER TOOL Bearing		1	
-	0091	30366T1	COLLAR		1	
-	0091	32336	DRIVER HEAD TOOL		1	
-	0091	36569T	DRIVE HEAD TOOL		1	
-	0091	37311	DRIVER HEAD TOOL		1	
-	0091	37312T	DRIVESHAFT BEARING DRIVER		1	
-	0091	52393T	DRIVER HEAD TOOL		1	
-	0091	37323	DRIVER ROD TOOL Needle Bearings		1	
-	0011	24156	NUT (.625-18)		1	
-	0091	36571T	PILOT WASHER		1	
-	0091	37324T	PILOT WASHER		1	
-	0091	37350T	PILOT MANDREL		1	
-	0091	29310	PLATE		1	
-	0091	36379	PULLER HEAD TOOL		1	
-	0091	32325T	DRIVER HEAD TOOL		1	

Cat.# 90-891749001

Special Tools (Gear Housing Bravo I)

Ref #	Part Class	Part Number	Description	Comments	Qty	Note
-	0091	38628T	INSTALLER TOOL Bearing		1	
-	0091	52394	PULLER HEAD TOOL		1	
-	0091	31229	SHAFT		1	
-	0091	37292	REMOVAL/INSTALLTION TOOL Roller Bearing		1	
-	0012	34961	WASHER		1	

Part No.	Description	Pg.	Ref.no	Part No.	Description	Pg.	Ref.no
12078	CLAMP	36	69	12078	CLAMP	40	21
12078	CLAMP	46	60	12706	SPACER (.194 x .375)	60	11
12708	SEAL	62	35	127091	SEAL	56	9
127091	SEAL	60	7	12711	SHAFT	62	39
12994	CLIP	48	18	12994	CLIP	50	19
12994	CLIP	52	17	14497A2	DETENT ASSEMBLY	62	36
14842	CAP	88	19	14842	CAP	88	25
15093	STUD (#10-32 x 1.00)	44	20	15755T	NEEDLE BEARING DRIVER	114	-
15768A3	SPACER KIT TILT	88	29	15768A3	SPACER KIT	92	22
15878	PIN Clevis Long	98	2	16419	PIN Clevis Short	98	3
16709A2	SEAL KIT Driveshaft Housing	58	-	16709A2	SEAL KIT Driveshaft Housing	62	-
16739	CONNECTOR	108	8	16755Q1	SEAL	56	3
17256	WRENCH Bearing Retainer	110	-	17262	ADJUSTMENT TOOL Shift Cable Anchor	112	-
17263	LOCATING TOOL Core Wire	112	-	17273	REMOVAL TOOL Bearing	110	-
17275A1	DRIVER ASSEMBLY Bearing And Seal	110	-	17301T1	STAND TOOL Clutch Assembly	110	-
17645	O-RING Reservoir End	96	15	17997A1	SPRING KIT	56	18
180766	CLAMP Worm Gear	36	43	18323	TAB WASHER Keyed	66	38
18323	TAB WASHER Keyed	78	35	18323	TAB WASHER Keyed	84	35
18529	PUMP ASSEMBLY Includes Screws	96	13	18545A1	REPAIR KIT	96	NS
18605A2	INSTALLATION TOOL Bearing Adaptor	114	-	18654A1	BELLOWS ASSEMBLY Exhaust	48	12
18654A1	BELLOWS ASSEMBLY Exhaust	50	13	18920A1	VALVE ASSEMBLY	48	16
18920A1	VALVE ASSEMBLY	50	6	18920A1	VALVE ASSEMBLY	52	23
191832	WASHER Sealing	78	31	1940971	HOSE (54.00 Inches Bulk) (Cut As Required)	108	7
20190	NUT (#10-32)	20	-	201951	O-RING (.487 x .103)	108	2
20518	SET SCREW (#8-32)	22	16	20583	WASHER	60	16
20826	O-RING (2.230 x .139)	64	18	20826	O-RING (2.230 x .139)	72	23
20826	O-RING (2.230 x .139)	78	17	20826	O-RING (2.230 x .139)	84	17
21071	COTTER PIN	52	34	21085	STUD (#10-32 x .930)	80	47
21085	STUD (#10-32 x .930)	84	47	21272	LOCKWASHER (.250)	26	23
21272	LOCKWASHER (.250)	32	45	21825	NUT (.250-28)	94	19
24156	NUT (.625-18)	112	-	24156	NUT (.625-18)	114	-
24231	SCREW (#10-32 x .250)	20	-	24231	SCREW (#10-32 x .250)	22	20
25908	WASHER (.265 x .812 x .0625)	94	16	26419	NUT (#8-32) Brass	94	9
26550	CLAMP	52	40	26953	COTTER PIN	60	17
26992	LOCKWASHER (.250) Stainless Steel	94	13	26992	LOCKWASHER (.250) Stainless Steel	94	18
26992	LOCKWASHER (.250) Stainless Steel	102	4	26992	LOCKWASHER (.250) Stainless Steel	104	3
26992	LOCKWASHER (.250) Stainless Steel	106	3	26996	LOCKWASHER (#10) Stainless Steel	40	8
26996	LOCKWASHER (#10) Stainless Steel	52	39	26996	LOCKWASHER (#10) Stainless Steel	106	9
27880	WASHER	100	9	28635	SCREW (.250-20 x .620) Stainless Steel	36	70
28635	SCREW (.250-20 x .620) Stainless Steel	40	22	28635	SCREW (.250-20 x .620) Stainless Steel	46	61
28636	SCREW (.250-20 x .750)	102	3	29245	WASHER (.281 x .500 x .060) Stainless Steel	94	26
29245	WASHER (.281 x .500 x .060) Stainless Steel	104	4	29245	WASHER (.281 x .500 x .060) Stainless Steel	106	14
29310	PLATE	112	-	29310	PLATE	114	-
29845	O-RING (.924 x .103)	60	21	30366T1	COLLAR	114	-
31106T	MANDREL Bearing Driver Cup	114	-	31229	SHAFT	112	-
31229	SHAFT	114	-	31229	SHAFT	116	-
31229A7	PULLER KIT Bearing	112	-	31229A7	PULLER KIT Bearing	114	-
31534	O-RING	66	31	31534	O-RING	78	28
31534	O-RING	84	28	32325T	DRIVER HEAD TOOL	112	-
32325T	DRIVER HEAD TOOL	114	-	32336	DRIVER HEAD TOOL	114	-
32518	WASHER	26	19	32518	WASHER	32	37
32518	WASHER	34	18	32834	WASHER (.9375 x 1.750 x .172)	22	7
32834	WASHER (.9375 x 1.750 x .172)	22	7	33465	O-RING	64	3
33465	O-RING	70	3	33465	O-RING	76	4
33465	O-RING	82	4	34567	WASHER	26	27
34567	WASHER	30	27	34567	WASHER	36	66
34569A1	PULLER ASSEMBLY Slide Hammer	110	-	34569A1	PULLER ASSEMBLY Slide Hammer	112	-
34569A1	PULLER ASSEMBLY Slide Hammer	114	-	34932	NUT (.375-24)	62	46
34933	NUT (.437-20) Stainless Steel	42	25	34933	NUT (.437-20) Stainless Steel	48	7
34933	NUT (.437-20) Stainless Steel	50	18	34933	NUT (.437-20) Stainless Steel	88	18
34933	NUT (.437-20) Stainless Steel	88	24	34961	WASHER	112	-

PARTS INDEX

Part No.	Description	Pg.	Ref.no	Part No.	Description	Pg.	Ref.no
34961	WASHER	116	-	35000	NUT (.500-20) Stainless Steel	46	54
35027	O-RING (1.046)	60	22	35048	LOCKWASHER (.375)	94	28
35052	PLUG Pipe (.250-18 x .375) Pipe	36	65	35053	NUT (.437-20)	56	29
35053	NUT (.437-20)	66	47	35053	NUT (.437-20)	72	49
35053	NUT (.437-20)	80	56	35053	NUT (.437-20)	86	56
35479	LOCKWASHER (.375)	20	-	35479	LOCKWASHER (.375)	60	4
35777	WASHER (.5156 x 1.375 x .125) Aluminum	22	5	35871	SCREW (.375-24 x 1.500)	100	8
35935	WASHER (.435 x .875 x .105) Stainless Steel	26	27	35935	WASHER (.435 x .875 x .105) Stainless Steel	30	27
35935	WASHER (.435 x .875 x .105) Stainless Steel	34	26	35935	WASHER (.435 x .875 x .105) Stainless Steel	48	6
35935	WASHER (.435 x .875 x .105) Stainless Steel	50	17	35935	WASHER (.435 x .875 x .105) Stainless Steel	52	6
35935	WASHER (.435 x .875 x .105) Stainless Steel	80	54	35935	WASHER (.435 x .875 x .105) Stainless Steel	86	54
36379	PULLER HEAD TOOL	114	-	36569T	DRIVE HEAD TOOL	114	-
36571T	PILOT WASHER	114	-	37241	PULLER PLATE Universal	110	-
37241	PULLER PLATE Universal	114	-	37292	REMOVAL/INSTALLTION TOOL Roller Bearing	116	-
37311	DRIVER HEAD TOOL	114	-	37312T	DRIVESHAFT BEARING DRIVER	114	-
37323	DRIVER ROD TOOL Needle Bearings	112	-	37323	DRIVER ROD TOOL Needle Bearings	114	-
37323	DRIVER ROD TOOL Needle Bearings	114	-	37324T	PILOT WASHER	114	-
37350T	PILOT MANDREL	114	-	37828	WASHER (.390 x .625 x .062) Stainless Steel	56	17
37828	WASHER (.390 x .625 x .062) Stainless Steel	58	34	37828	WASHER (.390 x .625 x .062) Stainless Steel	62	41
37828	WASHER (.390 x .625 x .062) Stainless Steel	62	45	37978	SCREW (#10-32 x .750) Stainless Steel	40	7
37978	SCREW (#10-32 x .750) Stainless Steel	52	38	38628T	INSTALLER TOOL Bearing	114	-
38628T	INSTALLER TOOL Bearing	116	-	38756	ADAPTER TOOL	110	-
38863	CLAMP	34	20	390721	PLUG Pipe (.125-27) Brass	56	32
4010516	SCREW (M5 x 16) Stainless Steel	104	9	41471	LOCKWASHER (.375)	34	34
41508	SCREW (.250-20 x .500) Stainless Steel	20	-	41508	SCREW (.250-20 x .500) Stainless Steel	22	22
41508	SCREW (.250-20 x .500) Stainless Steel	94	8	415825	CLAMP Nylon	108	6
415825	CLAMP Nylon	108	6	416071	SEAL Oil	26	5
416071	SEAL Oil	30	5	416071	SEAL Oil	34	4
41646A11	BELL HOUSING ASSEMBLY	52	1	41646A9	BELL HOUSING ASSEMBLY	48	1
41674	INSERT	26	16	41674	INSERT	34	14
41674	INSERT	48	4	41674	INSERT	52	3
41721	WASHER	40	3	41721	WASHER	44	3
41802	SEAL Rubber Without Tabs	26	12	41802	SEAL Rubber Without Tabs	30	12
41802	SEAL Rubber	34	11	41802	SEAL Rubber	34	33
42253	BOLT Pivot	22	2	42254	WASHER Tab	22	3
42256	THRUST WASHER (.105 Inch Thick)	66	29	42256	THRUST WASHER (.105 Inch Thick)	78	24
42256	THRUST WASHER (.105 Inch Thick)	84	24	42600A3	CONTROLLER ASSEMBLY	104	5
42600A3	CONTROLLER ASSEMBLY	106	5	42840T	SHIMMING TOOL	114	-
428611	FITTING Pipe - Brass (.750-14)	28	33	428611	FITTING Pipe - Brass (.750-14)	30	33
43433	GUIDE	22	14	43433A01	GUIDE KIT	22	-
43436	ANCHOR	22	15	43437	HOSE Water	26	15
43437	HOSE	34	15	43559T	CLAMP PLATE TOOL	114	-
43579	INSERT TOOL Water Hose,Tapered	112	-	43713	SEAL	26	14
43713	SEAL	30	14	43713	SEAL	34	13
437131	SEAL	36	47	43881A17	GIMBAL HOUSING ASSEMBLY	26	1
43881A18	GIMBAL HOUSING ASSEMBLY	34	1	43993	SEAL Oil	60	28
441081	GASKET	26	21	441081	GASKET	34	39
44117A12	PLATE ASSEMBLY Transom X-Haust Compatible	22	1	44117A8	PLATE ASSEMBLY Transom	22	1
44163	WASHER (.450 x 1.75 x .12)	46	58	44163	WASHER (.450 x 1.75 x .12)	88	17
44163	WASHER (.450 x 1.75 x .12)	88	23	44164	WASHER	46	55
44164	WASHER	88	15	44164	WASHER	88	21
44166	PIN	46	57	44166	PIN Rear Anchor	88	20
44167A1	PIN	46	56	44167A1	PIN Front Anchor	88	13
45497A1	EXPANDER TOOL Bellows	112	-	455771	SEAL	64	4
455771	SEAL	70	5	455771	SEAL Quad Ring	76	5
455771	SEAL Quad Ring	82	5	45710	O-RING (1.424 x .103)	56	4
45742	SCREW (.190-32 x .312)	42	28	45862	SCREW (#10-32 x .875)	20	-
45862	SCREW (#10-32 x .875)	106	4	46950	COTTER PIN	98	4
48171	O-RING (.364. x .070)	48	17	48171	O-RING (.364. x .070)	50	7
48171	O-RING (.364. x .070)	52	24	48409	SCREW (#10-16 x .625) Stainless Steel	94	21
49339	WASHER (.8125)	46	53	49910	NUT (.375-24)	22	13

Part No.	Description	Pg.	Ref.no	Part No.	Description	Pg.	Ref.no
52393T	DRIVER HEAD TOOL	114	-	52394	PULLER HEAD TOOL	116	-
52707Q1	PROP NUT KIT (.750-16)	66	43	52707Q1	PROP NUT KIT (.750-16)	78	40
52707Q1	PROP NUT KIT (.750-16)	84	40	53459	ROD TOOL Backlash Indicator Flag	114	-
5346170	HOSE (48.00 Inches Bulk) (5.00 Inches)	36	44	54012	WASHER (.530 x .870 x .105) Stainless Steel	22	8
54929	COTTER PIN	26	18	54929	COTTER PIN	32	36
54929	COTTER PIN	34	17	5495025	TUBING (25.00 Feet Bulk)	48	22
5495025	TUBING (25.00 Feet Bulk)	50	23	5495025	TUBING (25.00 Feet Bulk) Speedo	52	16
56296	STUD (.437-20 x 4.750)	26	2	56296	STUD (.437-20 x 4.750)	30	2
56766	STUD (.250-20/.250-28 x 1.380)	26	13	56766	STUD (.250-20/.250-28 x 1.380)	30	13
56766	STUD (.250-20/.250-28 x 1.380)	34	12	57008	RETAINER	40	9
57008	RETAINER	54	42	57410	BEARING Roller	72	36
57807	SCREW (#10-16 x .750) Stainless Steel	22	27	579203	STUD (.437-14/.437-20 x 2.060)	56	2
579203	STUD (.437-14/.437-20 x 2.060)	64	2	579203	STUD (.437-14/.437-20 x 2.060)	70	2
579203	STUD (.437-14/.437-20 x 2.060)	76	3	579203	STUD (.437-14/.437-20 x 2.060)	80	58
579203	STUD (.437-14/.437-20 x 2.060)	82	3	579203	STUD (.437-14/.437-20 x 2.060)	86	58
57932	STUD (.375-16/.375-24 x 1.750)	62	44	57982	STUD (.437-14/.437-20 x 1.875)	44	21
57984	STUD (.437-14/.437-20 x 2.380)	34	2	58222A1	DIAL INDICATOR TOOL	114	-
58308	LOCKWASHER Internal (#10)	20	-	58491	CHANNEL Rubber (4.00 Inches)	94	29
58640	SCREW (.375-16 x 1.25)	34	35	58642	SCREW (.375-16 x 1.50) Stainless Steel	56	16
59579	STUD (.437-14/.437-20 x 2.812)	48	3	59579	STUD (.437-14/.437-20 x 2.812)	50	3
59579	STUD (.437-14/.437-20 x 2.812)	52	2	59784	SCREW (.250-10 x 1.00)	94	27
5E31200TP	STERNDRIVE Bravo-I XR (1.50:1 Ratio)(Dual Water Pick-Up)	6	NS	5E31200UP	STERNDRIVE Bravo I XR 1.50:1 DWP	6	NS
5E31210TP	STERNDRIVE Bravo-I XR, Integrated (1.50:1Ratio)(Dual Water Pick-Up)	10	NS	5E31210UP	STERNDRIVE Bravo I XR 1.50:1 DWP ITS	10	NS
5E31800TP	STERNDRIVE Bravo-I XR (1.26:1 Ratio)(Dual Water Pick-Up)	6	NS	5E31810TP	STERNDRIVE Bravo-I XR, Integrated (1.26:1 Raio)(Dual Water Pick-Up)	10	NS
5E31900TP	STERNDRIVE Bravo-I XR (1.35:1 Ratio)(Dual Water Pick-Up)	6	NS	5E31900UP	STERNDRIVE Bravo I XR 1.35:1 DWP	6	NS
5E31910TP	STERNDRIVE Bravo-I XR, Integrated (1.35:1 Ratio)(Dual Water Pick-Up)	10	NS	5E31910UP	STERNDRIVE Bravo I XR 1.35:1 DWP ITS	10	NS
5E32200TP	STERNDRIVE Bravo-I XR (1.50:1) (Dual-Water Pickup)	6	NS	5E32900TP	STERNDRIVE Bravo-I XR Diesel (1.35:1)	6	NS
5E36200TP	STERNDRIVE Bravo-I XR (1.50:1 Ratio)(Low Water Pick-Up)	6	NS	5E36210TP	STERNDRIVE Bravo-I XR, Integrated (1.50:1 Ratio)(Low Water Pick-Up)	10	NS
5E36800TP	STERNDRIVE Bravo-I XR (1.26:1 Ratio)(Low Water Pick-Up)	6	NS	5E36810TP	STERNDRIVE Bravo-I XR, Integrated (1.26:1 Ratio)(Low Water Pick-Up)	10	NS
5E36900TP	STERNDRIVE Bravo-I XR (1.35:1 Ratio)(Low Water Pick-Up)	6	NS	5E36910TP	STERNDRIVE Bravo-I XR, Integrated (1.35:1 Ratio)(Low Water Pick-Up)	10	NS
5F36201HH	STERNDRIVE Bravo I XR SM (1.50:1 Ratio) (Long - Standard)	12	NS	5F36202HH	STERNDRIVE Bravo I XR SM (1.50:1 Ratio) (Long - Standard)	12	NS
5F36202IH	STERNDRIVE Bravo I XR SM (1.50:1 Ratio) (Long - Standard)	12	NS	5F36211HH	STERNDRIVE Bravo I XR SM (1.50:1 Ratio) (Long - Integrated Transom System)	12	NS
5F36212HH	STERNDRIVE Bravo I XR SM (1.50:1 Ratio) (Long - Integrated Transom System)	12	NS	5F36212IH	STERNDRIVE Bravo I XR SM (1.50:1 Ratio) (Long - Integrated Transom System)	12	NS
5F36801HH	STERNDRIVE Bravo XR SM (1.26:1 Ratio) (Long - Standard)	14	NS	5F36802HH	STERNDRIVE Bravo XR SM (1.26:1 Ratio) (Long - Standard)	14	NS
5F36811HH	STERNDRIVE Bravo XR SM (1.26:1 Ratio) (Long - Integrated Transom System)	14	NS	5F36812HH	STERNDRIVE Bravo XR SM (1.26:1 Ratio) (Long - Integrated Transom System)	14	NS
5F36901HH	STERNDRIVE Bravo XR SM (1.35:1 Ratio) (Long - Standard)	14	NS	5F36902HH	STERNDRIVE Bravo XR SM (1.35:1 Ratio) (Long - Standard)	14	NS
5F36902IH	STERNDRIVE Bravo XR SM (1.35:1 Ratio) (Long - Standard)	14	NS	5F36911HH	STERNDRIVE Bravo XR SM (1.35:1 Ratio) (Long - Integrated Transom System)	16	NS
5F36912HH	STERNDRIVE Bravo XR SM (1.35:1 Ratio) (Long - Integrated Transom System)	16	NS	5F36912IH	STERNDRIVE Bravo XR SM (1.35:1 Ratio) (Long - Integrated Transom System)	16	NS
5G36201HH	STERNDRIVE Bravo I XR SM (1.50:1 Ratio) (Short - Standard)	12	NS	5G36202HH	STERNDRIVE Bravo I XR SM (1.50:1 Ratio) (Short - Standard)	12	NS
5G36202IH	STERNDRIVE Bravo I XR SM (1.50:1 Ratio) (Short - Standard)	12	NS	5G36211HH	STERNDRIVE Bravo I XR SM (1.50:1 Ratio) (Short - Integrated Transom System)	12	NS
5G36212HH	STERNDRIVE Bravo I XR SM (1.50:1 Ratio) (Short - Integrated Transom System)	12	NS	5G36212IH	STERNDRIVE Bravo I XR SM (1.50:1 Ratio) (Short - Integrated Transom System)	12	NS
5G36801HH	STERNDRIVE Bravo XR SM (1.26:1 Ratio) (Short - Standard)	14	NS	5G36802HH	STERNDRIVE Bravo XR SM (1.26:1 Ratio) (Short - Standard)	14	NS
5G36811HH	STERNDRIVE Bravo XR SM (1.26:1 Ratio) (Short - Integrated Transom System)	14	NS	5G36812HH	STERNDRIVE Bravo XR SM (1.26:1 Ratio) (Short - Integrated Transom System)	14	NS
5G36901HH	STERNDRIVE Bravo XR SM (1.35:1 Ratio) (Short - Standard)	16	NS	5G36902HH	STERNDRIVE Bravo XR SM (1.35:1 Ratio) (Short - Standard)	16	NS
5G36902HH	STERNDRIVE Bravo XR SM (1.35:1 Ratio) (Short - Standard)	16	NS	5G36911HH	STERNDRIVE Bravo XR SM (1.35:1 Ratio) (Short - Integrated Transom System)	16	NS
5G36912HH	STERNDRIVE Bravo XR SM (1.35:1 Ratio) (Short - Integrated Transom System)	16	NS	5G36912IH	STERNDRIVE Bravo XR SM (1.35:1 Ratio) (Short - Integrated Transom System)	16	NS

PARTS INDEX

Part No.	Description	Pg.	Ref.no	Part No.	Description	Pg.	Ref.no
5H41300TP	STERNDRIVE Bravo-III XR Gas (1.65:1 Ratio)	6	NS	5H41300TT	STERNDRIVE Bravo-III XR Gas (1.65:1) Dual Water Pick-Up	8	NS
5H41310TP	STERNDRIVE Bravo-III XR, Integrated (1.65:1 Ratio)	10	NS	5H41310TZ	STERNDRIVE Bravo-III XR Integrated Gas (1.65:1) Dual Water Pick-Up	10	NS
5H41310UP	STERNDRIVE Bravo III XR 1.65:1 DWP ITS	10	NS	5H41400TZ	STERNDRIVE Bravo-III XR (1.81:1 Ratio) Dual Water Pick-Up	6	NS
5H41400UP	STERNDRIVE Bravo III XR 1.81:1 DWP	6	NS	5H41410TZ	STERNDRIVE Bravo-III XR Integrated (1.81:1 Ratio) Dual Water Pick-Up	6	NS
5H41600TP	STERNDRIVE Bravo-III XR Gas (2.00:1 Ratio)	6	NS	5H41600TZ	STERNDRIVE Bravo-III XR Gas (2.00:1 Ratio) Dual Water Pick-Up	6	NS
5H41610TP	STERNDRIVE Bravo-III XR Integrated (2.00:1 Ratio)	10	NS	5H41610TZ	STERNDRIVE Bravo-III XR Integrated (2.00:1 Ratio) Dual Water Pick-Up	10	NS
5H41610UP	STERNDRIVE Bravo III XR 2.00:1 DWP ITS	10	NS	5H42300TP	STERNDRIVE Bravo-III XR Diesel (1.65:1)	6	NS
5H42300TZ	STERNDRIVE Bravo-III XR Diesel (1.65:1) Dual Water Pick-Up	6	NS	5H42400TP	STERNDRIVE Bravo-III XR Diesel (1.81:1)	6	NS
5H42400TZ	STERNDRIVE Bravo-III XR Diesel (1.81:1) Dual Water Pick-Up	6	NS	5H42600TZ	STERNDRIVE Bravo-III XR Diesel (2.00:1 Ratio) Dual Water Pick-Up	8	NS
5M41400TP	STERNDRIVE Bravo-III XR (1.81:1)	6	NS	5M41600TP	STERNDRIVE Bravo-III XR (2.00:1) Seacore	6	NS
5M42300TP	STERNDRIVE Bravo-III XR Diesel (1.65:1) (SEACORE)	6	NS	5M42400TP	STERNDRIVE Bravo III XR Diesel (1.81:1) Seacore	6	NS
5T32300TP	STERNDRIVE Bravo-II XR Diesel (1.65:1)	6	NS	5X32200TP	STERNDRIVE Bravo-I XR Diesel (1.50:1) (Dual-Water Pickup) Seacore	6	NS
61069T	NUT TOOL Gear Housing Cover	114	-	61075	TOLERANCE RING	26	11
61075	TOLERANCE RING	30	11	61075	TOLERANCE RING	34	10
61077T	ADAPTER TOOL Driveshaft	114	-	62000005P	TRANSOM Magnum, Bravo SmartCraft, Diesel Ready With Block-off: Without Internal Hose	18	-
62000006P	TRANSOM Magnum, Bravo SmartCraft SeaCore, Diesel Ready With Block-off: Without Internal Hose	18	-	620000071	TRANSOM ASSEMBLY Hi Performance With Sender; Without Steering Arm	18	-
620000091	TRANSOM ASSEMBLY Hi Performance With Sender	18	-	62568	SCREW (#10-16 x .375)	104	8
62568	SCREW (#10-16 x .375)	106	8	627021	O-RING (.301 x .070)	108	3
62705	O-RING	48	5	62705	O-RING	52	4
62705001	O-RING	50	5	6311002NZ	TRANSOM ASSEMBLY Magnum	18	-
63616T	PULLER	112	-	63638T	DRIVER TOOL Bearing	114	-
642351	J CLIP	34	40	65110	NUT	52	35
6511002NZ	TRANSOM ASSEMBLY Hi Performance Without Sender	18	-	6511102NZ	TRANSOM ASSEMBLY Hi Performance With Sender	18	-
65208	BOOT Insulator - Black Insulator	106	7	65210	SCREW (.375-16 x 1.00)	60	3
6521002HH	TRANSOM ASSEMBLY Integrated Housing	18	-	6521002JH	TRANSOM ASSEMBLY Integrated Housing X-Haust Compatible	18	-
66274	TORQUE WRENCH (0-150 lb-in)	110	-	66274	TORQUE WRENCH (0-150 lb-in)	114	-
66668A1	BEARING ASSEMBLY Tapered Roller	64	11	66668A1	BEARING ASSEMBLY Tapered Roller	70	16
66668A1	BEARING ASSEMBLY Tapered Roller	76	8	66668A1	BEARING ASSEMBLY Tapered Roller	82	8
67297	PIN Clevis	54	43	67440T	LOAD RING	66	28
67440T	LOAD RING	78	27	67440T	LOAD RING	84	27
67443T	DRIVER TOOL Cup	114	-	67892A06	PLUG KIT Drain - Magnetic	56	10
67892A06	PLUG KIT Drain - Magnetic	66	33	67892A06	PLUG KIT Drain - Magnetic	70	10
67892A06	PLUG KIT Drain - Magnetic	84	30	67892A1	FITTING KIT Magnetic, Plug Fill/Drain	78	30
68219	NUT (#10-32) Stainless Steel	104	6	68219	NUT (#10-32) Stainless Steel	106	6
68292	NUT (.312-18)	94	23	68513	SCREW (#10-32 x .375) Stainless Steel	46	44
68513	SCREW (#10-32 x .375) Stainless Steel	100	6	69067	SCREW (.250-20 x 1.375)	104	12
6911002TP	TRANSOM ASSEMBLY Bravo (SEACORE)	18	-	69432	LOCKWASHER External (#10)	44	29
69432	LOCKWASHER External (#10)	46	45	69432	LOCKWASHER External (#10)	66	37
69432	LOCKWASHER External (#10)	78	33	69432	LOCKWASHER External (#10)	84	33
69432	LOCKWASHER External (#10)	88	10	69432	LOCKWASHER External (#10)	100	7
6A15002TP	TRANSOM ASSEMBLY Bravo (SEACORE) SmartCraft	18	-	72521	LOCKWASHER Internal Tooth	72	52
72809	STUD (.250-20/.250-28 x 1.620)	36	50	73015	SCREW (.250-20 x 1.75)	26	22
73015	SCREW (.250-20 x 1.75)	30	23	74036	FITTING Grease	26	7
74036	FITTING Grease	30	7	74036	FITTING Grease	34	6
74639A2	BELLOWS ASSEMBLY Shift Cable	26	24	74639A2	BELLOWS ASSEMBLY Shift Cable	30	24
74639A2	BELLOWS ASSEMBLY Shift Cable	34	19	762144	ANODE	72	54
76214Q5	ANODE KIT	64	7	76214Q5	ANODE KIT	70	8
76630	SCREW (.250-20 x 1.00)	30	19	76868A2	SEAL KIT Gear Housing	72	-
77633Q	LUBRICAP	26	8	77633Q	LUBRICAP	30	8
77633Q	LUBRICAP	34	7	78038	SCREW (.250-20 x 1.75)	26	22
78038	SCREW (.250-20 x 1.75)	30	23	78310	PIN TOOL Hinge	112	-

Part No.	Description	Pg.	Ref.no	Part No.	Description	Pg.	Ref.no
78458A1	TUBE	48	12	78458A1	TUBE	50	13
78458A1	TUBE	52	12	78968	LOCKWASHER Internal (.250)	20	-
78968	LOCKWASHER Internal (.250)	26	23	78968	LOCKWASHER Internal (.250)	26	31
78968	LOCKWASHER Internal (.250)	30	31	78968	LOCKWASHER Internal (.250)	32	45
78968	LOCKWASHER Internal (.250)	34	24	78968	LOCKWASHER Internal (.250)	36	41
79023A10	FUSE ASSEMBLY 110 Ampere	94	15	79091	FUSE 20 Ampere	104	10
79091	FUSE 20 Ampere	106	12	79138A9	CABLE ASSEMBLY (6.00 Feet) Black-Negative Negative - Battery	94	11
79139A12	CABLE ASSEMBLY Red-Positive Positive - Battery	94	17	79146	RETAINER	40	20
79146	RETAINER	54	44	79147A08	HARNESS ASSEMBLY With Molded Connector	94	3
79147A09	HARNESS ASSEMBLY With Packard Connector	94	30	79448	RETAINER Bearing Carrier	66	39
79448	RETAINER Bearing Carrier	78	36	79448	RETAINER Bearing Carrier	84	36
803852	COUPLING	96	11	805068	WASHER	64	22
805068	WASHER	70	13	805068	WASHER	76	11
805068	WASHER	82	11	805072	BUSHING	72	30
805074A2	PROPELLER SHAFT Outer	72	35	805078A1	SHIM ASSEMBLY	72	33
805079T	BEARING Roller	72	41	805096	RING Retaining	72	32
805100T	THRUST HUB Front	72	43	805101T	THRUST HUB Rear	72	45
805130A6	SENDER KIT Dual Station	42	NS	805134A4	ROTOR KIT Trim Sender	40	NS
805164	U BOLT	40	24	805164	U BOLT	40	24
805164	U BOLT	44	15	805182A1	BEARING ASSEMBLY Tapered Roller	72	34
805261A1	WEAR PAD KIT	60	1	805272	RING Retaining	44	23
805272	RING Retaining	88	14	805320A1	SWITCH ASSEMBLY Trim Sender/Trim Limit	40	6
805322	BEARING Caged Roller	72	29	805329A1	CARRIER ASSEMBLY Bearing	72	39
805330	RETAINER	72	38	805331	O-RING	72	40
805344	SEAL (.625 Outside Diameter)	64	5	805344	SEAL (.625 Outside Diameter)	70	4
805475A1	ALIGNMENT TOOL ASSEMBLY	112	-	805627A1	SHIM ASSEMBLY	72	31
805732	O-RING (2.612 x .103)	46	48	805733	SCREW (.250-28 x 1.00)	60	10
806188A1	ANODE ASSEMBLY	66	35	806188A1	ANODE ASSEMBLY	78	32
806188A1	ANODE ASSEMBLY	84	32	806189Q1	ANODE	100	22
806189T1	ANODE ASSEMBLY	44	27	806190Q1	ANODE ASSEMBLY	88	8
806191T	CAP	92	21	806193A30	RESERVOIR	108	12
806193A33	MONITOR ASSEMBLY Oil	108	12	806193A37	RESERVOIR	108	12
806210	LOCKWASHER (.437)	64	8	806210	LOCKWASHER (.437)	70	7
806232	O-RING (.239 x .064)	98	8	806241	WASHER	48	2
806241	WASHER	50	2	806290	SCREW (#10-32 x .625)	44	28
806290	SCREW (#10-32 x .625)	66	36	806290	SCREW (#10-32 x .625)	78	34
806290	SCREW (#10-32 x .625)	84	34	806290	SCREW (#10-32 x .625)	88	9
806327	SCREW (.437-14 x 1.750)	64	9	806327	SCREW (.437-14 x 1.750)	70	6
806552	YOKE Shifter	60	9	806552A1	YOKE AND CAM ASSEMBLY	60	8
8067271	CAP Drive Lube Monitor	108	13	807073	BUSHING	46	50
807073	BUSHING	88	16	807073	BUSHING	88	22
807204	SCREW (.437-20 x 2.00)	40	17	807204	SCREW (.437-20 x 2.00)	44	11
807754	SCREW (#10-24 x .38)	20	-	807754	SCREW (#10-24 x .38)	42	28
807754	SCREW (#10-24 x .38)	52	41	808006	INSERT Trim Adjustment	56	30
808027	SCREW	64	23	808027	SCREW	70	12
808027	SCREW	78	12	808027	SCREW	82	12
808624	CONNECTOR	108	11	808728T	ADAPTER ASSEMBLY	96	10
812498A1	VALVE KIT Relief Up Pressure	96	NS	812499A1	VALVE KIT Relief Down Pressure	96	NS
812619	FUSE Yellow - 20 Ampere	94	4	812767A1	BEARING ASSEMBLY Tapered Roller	64	27
812767A1	BEARING ASSEMBLY Tapered Roller	78	26	812767A1	BEARING ASSEMBLY Tapered Roller	84	26
812773T02	DRIVESHAFT Upper	56	24	813653T	DRIVER Bearing	110	-
813653T	DRIVER Bearing	114	-	814382	CONNECTOR	52	21
814806	WASHER (.344 x .688 x .065) Stainless Steel	72	51	814806	WASHER (.344 x .688 x .065) Stainless Steel	78	44
814806	WASHER (.344 x .688 x .065) Stainless Steel	84	44	815303	ADAPTER	48	15
815303	ADAPTER	50	16	815303	ADAPTER	52	15
815471A6	CABLE KIT Shift	22	10	815472	WASHER Sealing	22	12
815504320	CLAMP Worm Gear	26	26	815504320	CLAMP Worm Gear	30	26
815504320	CLAMP Worm Gear	34	21	815504348	CLAMP Worm Gear	48	14
815504348	CLAMP Worm Gear	50	15	815504348	CLAMP Worm Gear	52	14
815504372	CLAMP Worm Gear	48	10	815504372	CLAMP Worm Gear	50	11

PARTS INDEX

Part No.	Description	Pg.	Ref.no	Part No.	Description	Pg.	Ref.no
815504372	CLAMP Worm Gear	52	10	815565	SEAL Oil	66	32
815565	SEAL Oil	78	29	815565	SEAL Oil	84	29
815565A02	SEAL KIT Gear Housing	80	-	815565A02	SEAL KIT Gear Housing	86	-
815565A1	SEAL KIT Gear Housing	66	-	815901	RACE Bearing	64	13
815901	RACE Bearing	70	18	815901	RACE Bearing	76	10
815901	RACE Bearing	82	10	8159501	BUSHING	36	58
8159501	BUSHING	44	19	8159501	BUSHING	100	2
816311T	TIE STRAP (8.00 Inches)	54	45	816510T	BRACKET	40	23
816510T	BRACKET	44	14	816606	CLAMP	52	18
816742	SCREW (.250-20 x 1.250)	36	42	8175051	SCREW (.250-20 x .625)	30	18
8175051	SCREW (.250-20 x .625)	50	4	817570T	DRIVER TOOL Oil Seal	110	-
818162	INSTALLATION TOOL Sleeve	112	-	818169T	REMOVAL TOOL Sleeve	112	-
818224	SCREW (#12-11 x 1.750)	24	30	818304A1	BLOCK OFF KIT	102	1
818305	GASKET	102	2	818557	CLAMP	42	26
818557	CLAMP	48	19	818557	CLAMP	50	20
818557	CLAMP	52	22	818557001	CLAMP	42	29
818834	STUD (.437-20 x 4.250)	26	3	818834	STUD (.437-20 x 4.250)	30	3
818928A2	GEAR SET (15/19)	64	21	818928A2	GEAR SET (15/19)	78	20
818928A2	GEAR SET (15/19)	84	20	821630Q1	ANODE ASSEMBLY	60	2
8219971	PIN Hinge	40	10	8219971	PIN Hinge 4 Bolt Design	44	4
822374A14	GIMBAL RING ASSEMBLY	40	1	822374A17	GIMBAL RING ASSEMBLY	40	1
822374A3	GIMBAL RING ASSEMBLY	40	1	822374A4	GIMBAL RING ASSEMBLY	40	1
822535A1	GEAR SET (16/27)	70	14	823444	SCREW	96	9
824517A1	GEAR SET (18/25)	70	14	824928	PLUG Rubber	56	28
82670815	NUT (.437-20)	26	28	82670815	NUT (.437-20)	30	28
82670815	NUT (.437-20)	36	67	826709014	NUT (.437-14) Stainless Steel	80	55
826709014	NUT (.437-14) Stainless Steel	86	55	82670910	NUT (.312-18) Stainless Steel	78	43
82670910	NUT (.312-18) Stainless Steel	84	43	826709109	NUT (.250-28) Stainless Steel	46	42
8267096	NUT (#10-32) Stainless Steel	36	60	8267096	NUT (#10-32) Stainless Steel	36	63
8267096	NUT (#10-32) Stainless Steel	44	39	8267096	NUT (#10-32) Stainless Steel	80	49
8267096	NUT (#10-32) Stainless Steel	84	49	8267098	NUT (.250-20) Stainless Steel Bonding Strap Stud	36	54
82671013	NUT (.375-24) Stainless Steel	58	36	82671015	NUT (.437-20) Stainless Steel	22	21
82671015	NUT (.437-20) Stainless Steel	34	27	82671015	NUT (.437-20) Stainless Steel	46	52
8267119	NUT (.250-28)	28	32	8267119	NUT (.250-28)	30	32
8267119	NUT (.250-28)	34	25	82671323	NUT (.750-16)	40	16
82671323	NUT (.750-16)	44	10	8267139	NUT (.250-28)	60	12
828054	COVER Fuse	94	5	828370	BRACKET	24	28
830749	SEAL	56	11	830749	SEAL Sealing	66	34
830749	SEAL	70	11	830749	SEAL	84	31
8307973	CONNECTOR	52	27	83155	ADAPTER KIT Dial Indicator	114	-
831957	RETAINER	52	26	840359	DECAL Mercury Racing	34	31
840372A2	CARRIER ASSEMBLY Bearing	66	30	840372A2	CARRIER ASSEMBLY Bearing	78	25
840372A2	CARRIER ASSEMBLY Bearing	84	25	840377T	PROPELLER SHAFT	64	26
840377T	PROPELLER SHAFT	78	23	840377T	PROPELLER SHAFT	84	23
840382A1	SNUBBER STRIP KIT	66	44	840382A1	SNUBBER STRIP KIT	78	41
840382A1	SNUBBER STRIP KIT	84	41	840383A1	WASHER/NUT KIT	66	42
840383A2	WASHER/NUT KIT	78	39	840383A2	WASHER/NUT KIT	84	39
840385	INSTALLATION TOOL Seal	114	-	840388	INSTALLATION TOOL Bearing Carrier	114	-
840389A5	HUB ASSEMBLY Propeller	66	40	840389K5	HUB KIT Propeller	78	37
840389K5	HUB KIT Propeller	84	37	840393	WRENCH TOOL Bearing Carrier Retainer	114	-
840393A1	INSTALLATION TOOL Propeller Shaft	114	-	840493T1	COWL ASSEMBLY Transom	34	29
840496A3	BOX ASSEMBLY Transom	36	46	840532A1	GIMBAL RING ASSEMBLY	44	1
840552	HOSE Hydraulic	44	35	840554	HOSE Hydraulic	44	36
840555	HOSE Hydraulic	44	34	840556	HOSE Trim Cylinder Starboard	44	37
840557	HOSE Trim Cylinder Port	44	33	840656	HOSE Hydraulic	46	62
840656	HOSE Hydraulic	46	64	840657	HOSE ASSEMBLY Black Hydraulic	46	46
840688	CONNECTOR	34	38	840689T	TUBE Extension	36	68
840690T	VALVE BLOCK ASSEMBLY	22	25	840691	BLOCK	46	40
840692	HOSE ASSEMBLY Gray Hydraulic	46	47	840693A2	PLATE KIT Exhaust Extension	34	32
840728	PIN Mounting Trim Cylinder	44	17	840739	PIN	36	59
840744	PLATE	46	49	840768T	END CAP	100	17

Part No.	Description	Pg.	Ref.no	Part No.	Description	Pg.	Ref.no
840801	PLATE	36	61	840802	SPACER	44	24
840803	SPACER	44	22	840831	TUBE (60 Degree)	36	45
840832	PIN	44	38	840838T1	COVER ASSEMBLY Top	56	31
840840	GROMMET	34	30	840841	WASHER	36	57
840842	BRACKET	34	36	840843	LINK ROD	52	31
840844	BRACKET	52	32	840845	ARM Actuator	52	30
840846	HOUSING Actuator Arm Support	52	28	840847	BUSHING Snap	34	37
840848	WASHER	34	28	840851	STUD	58	35
840853	NUT (#10-32) Stainless Steel (Reduced Hex Jam)	100	23	840854	STUD (#10-32 x 1.22)	100	21
840870A1	GEAR SET (17/18)	64	21	840870A1	GEAR SET (17/18)	78	20
840870A1	GEAR SET (17/18)	84	20	840872A1	GEAR SET (15/17)	64	21
840872A1	GEAR SET (15/17)	78	20	840872A1	GEAR SET (15/17)	84	20
840884	STUD	36	49	840898A3	GEAR SET (16/19)	56	20
840907	SCREW (.250-20 x .750)	40	11	840907	SCREW (.250-20 x .750)	44	5
840907	SCREW (.250-20 x .750)	44	18	840965A1	ALIGNMENT TOOL ASSEMBLY	112	-
840979T1	DRIVESHAFT ASSEMBLY (14.085 Long)	76	9	840979T1	DRIVESHAFT ASSEMBLY (14.085 Long)	82	9
841024001	STUD (.437-14/.437-20 x 4.250)	80	58	841024001	STUD (.437-14/.437-20 x 4.250)	86	58
841026A2	RETAINER/SEAL KIT	60	26	841031	SCREW (.437-14 x 1.00)	80	50
841031	SCREW (.437-14 x 1.00)	84	50	841067T1	FILTER ASSEMBLY Power Steering	22	23
841076	ELEMENT Power Steering Filter	22	24	841910A01	GEAR SET (17/26)	70	14
842783T01	COVER ASSEMBLY	62	42	842825T01	SPLASH PLATE KIT	78	42
842826	GASKET Splash Plate	80	52	842826	GASKET Splash Plate	86	52
842827	SCREW (.437-14 x 4.00)	80	51	842828	BUSHING	80	53
842831	SCREW (.312-18 x 1.25)	78	46	842831	SCREW (.312-18 x 1.25)	84	46
842922	WASHER (.450 x .750 x .060) Stainless Steel	46	51	842922	WASHER (.450 x .750 x .060) Stainless Steel	52	37
842952	SCREW (.437-14 x 4.25)	80	51	842952	SCREW (.437-14 x 4.25)	84	51
842953	BUSHING	80	53	842953	BUSHING	86	53
843042T03	SPLASH PLATE KIT	78	42	843042T03	SPLASH PLATE KIT Stainless Steel	84	42
843043	SPACER	78	45	843043	SPACER (.320 Thick x .343 x .750)	84	45
843122T01	FLUSH ATTACHMENT	80	-	843122T01	FLUSH ATTACHMENT	86	-
843125	STUD (.250-20 x 2.02) Bonding Strap	36	50	843240	BEARING ASSEMBLY Roller	56	6
843240	BEARING ASSEMBLY Roller	56	14	844105	SPACER	78	45
844399T01	VALVE BLOCK ASSEMBLY	24	32	845760T3	CYLINDER ASSEMBLY Steering Starboard	100	1
845760T6	CYLINDER ASSEMBLY Steering Port	100	1	845997	NUT (.625-18)	100	14
846345	STUD (#10-32 x .750)	36	48	846673	WASHER (.265 x .500 x .060) Stainless Steel	46	41
847022	PLATE	46	43	847062A1	BONDING KIT	20	-
847062A1	BONDING KIT	100	5	847332	ANODE	80	48
847332	ANODE	84	48	847637	BUSHING	40	4
847637	BUSHING	52	5	847638	BUSHING	40	2
847638	BUSHING	44	2	8480611	COVER Propshaft	80	59
8480611	COVER Propshaft	86	59	849083	SPACER	24	31
849320T	GEAR (16 Teeth)	60	31	85060	PLATE	44	30
85060	PLATE	88	11	85344	WASHER (.750 Inside Diameter)	40	15
85344	WASHER (.750 Inside Diameter)	44	9	85344	WASHER (.750 Inside Diameter)	80	60
85344	WASHER (.750 Inside Diameter)	86	60	85486	SCREW (.250-20 x .380) Stainless Steel	20	-
85486	SCREW (.250-20 x .380) Stainless Steel	44	31	85486	SCREW (.250-20 x .380) Stainless Steel	88	12
858517A3	DRIVESHAFT ASSEMBLY (16.085 Long)	64	12	858517A3	DRIVESHAFT ASSEMBLY (16.085 Long)	70	17
858517A3	DRIVESHAFT ASSEMBLY (16.085 Long)	76	9	858517A3	DRIVESHAFT ASSEMBLY (16.085 Long)	82	9
859116	NUT (.437-20)	42	25	859116	NUT (.437-20)	42	25
859116	NUT (.437-20)	46	59	859116	NUT (.437-20)	48	7
859116	NUT (.437-20)	50	18	859116	NUT (.437-20)	52	7
859124	NUT (#10-32) Stainless Steel Nylon Insert	100	24	859131	PROP NUT Front	72	44
86049	CLIP Grounding	48	9	86049	CLIP Grounding	48	13
86049	CLIP Grounding	50	10	86049	CLIP Grounding	50	14
86049	CLIP Grounding	52	9	86049	CLIP Grounding	52	13
861150A2	FITTING ASSEMBLY	108	1	861163	QUICK CONNECTOR (90 Degree)	108	5
861175A2	SHIFT LINKAGE ASSEMBLY High Bump Shift Lever	60	14	861209A1	BUSHING KIT	56	8
861209A1	BUSHING KIT	60	6	861492	PLUG Trim Switch Wires	28	34
861492	PLUG Trim Switch Wires	30	34	861597	CAP Standard	96	17
861632	INSERT	22	17	861680	INSULATOR	94	20

PARTS INDEX

Part No.	Description	Pg.	Ref.no	Part No.	Description	Pg.	Ref.no
861694	SEAL Oil	72	42	861695	SEAL	72	37
861776A2	PLATE KIT	36	71	861787	BEARING ASSEMBLY	56	19
861791	RACE	56	5	861791	RACE	56	13
861792	BEARING Thrust	56	21	861832	WASHER	60	32
861844	O-RING	60	27	861854	WASHER (.453 x .750 x .032) Stainless Steel	40	18
861854	WASHER (.453 x .750 x .032) Stainless Steel	44	12	861854	WASHER (.453 x .750 x .032) Stainless Steel	56	27
861854	WASHER (.453 x .750 x .032) Stainless Steel	66	46	861854	WASHER (.453 x .750 x .032) Stainless Steel	72	48
861854	WASHER (.453 x .750 x .032) Stainless Steel	80	57	861854	WASHER (.453 x .750 x .032) Stainless Steel	86	57
862134	WASHER	60	29	862209	SLEEVE	48	11
862209	SLEEVE	50	12	862209	SLEEVE	52	11
862219A1	SPANNER WRENCH	110	-	862540A3	BEARING ASSEMBLY	26	10
862540A3	BEARING ASSEMBLY	30	10	862540A3	BEARING ASSEMBLY	34	9
862548A1	BRACKET KIT	94	25	862646	FUSE Tan - 5 Ampere	104	14
862903	NUT (.375-24)	42	25	862903	NUT (.375-24)	42	25
862903	NUT (.375-24)	44	16	862907	PROP NUT Rear	72	46
863160030	SUPPLMENT Service Manual	2	NS	8631601	SERVICE MANUAL #28	2	NS
863187A2	SENDER ASSEMBLY Trim	52	25	86322A15	CABLE ASSEMBLY (5.50 Inches) Black	94	22
86322A24	CABLE ASSEMBLY (4.00 Inches)	94	10	863332	NUT (.500-20) Aluminum	22	9
863412	INSTALLATION TOOL Universal Joint Seal	110	-	864596058	SHIM/RACE (.0575/.0584 Thick) Brown Thrust Bearing	58	33
864596059	SHIM/RACE (.0585/.0594 Thick) White Thrust Bearing	58	33	864596060	SHIM/RACE (.0595/.0604 Thick) Orange Thrust Bearing	58	33
864596061	SHIM/RACE (.0605/.0614 Thick) Green Thrust Bearing	58	33	864596062	SHIM/RACE (.0615/.0624 Thick) Yellow Thrust Bearing	58	33
864596063	SHIM/RACE (.0625/.0634 Thick) Red Thrust Bearing	58	33	864596064	SHIM/RACE (.0635/.0644 Thick) Light Blue Thrust Bearing	58	33
864596065	SHIM/RACE (.0645/.0654 Thick) Black Thrust Bearing	58	33	864596066	SHIM/RACE (.0655/.0664 Thick) Pink Thrust Bearing	58	33
865181A01	HARNESS ASSEMBLY Mercathode	104	2	865181A01	HARNESS ASSEMBLY Mercathode	106	10
865182A01	ANODE KIT Aluminum Propeller Shaft	72	50	865182A02	ANODE KIT Magnesium Propeller Shaft	72	50
865190	CONNECTOR Female	108	10	865191	FITTING Male	108	9
865191	FITTING Male	108	9	865260	BEARING Thrust	72	29
865261	FITTING	52	19	865315A02	PROPELLER SHAFT Outer	72	35
865321	SCREW (.437-14 x 1.250)	72	55	865322T	PROPELLER SHAFT Inner	72	28
865323	SCREW	72	53	865324	QUICK CONNECT	32	41
865344A01	CLUTCH ASSEMBLY	56	22	865379	FITTING Female	108	5
865380A13	PUMP/MOTOR ASSEMBLY Trim - 12 Volt	94	2	865380A13	PUMP/MOTOR ASSEMBLY Trim - 12 Volt	96	1
865380A15	PUMP ASSEMBLY Trim - Complete	94	-	865383A02	ACTUATOR ASSEMBLY Steering (Component Parts Not Sold Seperate)	98	1
865384001	HOSE Black Hydraulic Manifold to Pump	88	1	865385001	HOSE Gray Hydraulic Manifold to Pump	88	3
865391	FITTING ASSEMBLY Speedometer Male Quick Connect	48	20	865391	FITTING ASSEMBLY Speedometer Male Quick Connect	50	21
865391	FITTING ASSEMBLY Speedometer Male Quick Connect	54	46	865410001	FITTING Female Quick Connect	46	63
865410001	FITTING Female Quick Connect	88	2	865411001	FITTING Male Quick Connect	46	65
865411001	FITTING Male Quick Connect	88	4	865412001	FITTING Stainless Steel Male Quick Connect	96	7
865413001	FITTING Stainless Steel Female Quick Connect	96	5	865414	FITTING Male Quick Connect	98	7
865415	FITTING Female Quick Connect	98	5	865417	FITTING Female Quick Connect	48	21
865417	FITTING Female Quick Connect	50	22	865417	FITTING Female Quick Connect	54	47
865425A03	UNIVERSAL JOINT ASSEMBLY	60	19	865425T02	UNIVERSAL JOINT ASSEMBLY	60	19
865440H56	HOUSING ASSEMBLY Driveshaft - Complete (16/19)	56	-	865440H56	HOUSING ASSEMBLY Driveshaft - Complete (16/19)	60	-
865440H70	HOUSING Driveshaft - Basic	56	1	865440H70	HOUSING Driveshaft - Basic	60	-
865440H73	HOUSING ASSEMBLY Driveshaft - Complete (16/19)	56	-	865440H73	HOUSING ASSEMBLY Driveshaft - Complete (16/19)	60	-
865441A02	COVER ASSEMBLY Back	62	34	865448A01	CAP Oil Reservoir Rough Water Application	96	17
865470	HOUSING Inlet Male Quick Connect	26	20	865507A04	COVER ASSEMBLY Top	56	12
865712	SCREW (.250-28 x .930)	60	13	865770A02	HARNESS ASSEMBLY Adapter - Molded 3 Pin Female To Packard 3 Pin Female	94	31
865771A02	HARNESS ASSEMBLY Adapter - Molded 3 Pin Male To Packard 3 Pin Male	94	32	865866	PLUG Shift Shaft Oil Seal	56	7
865866	PLUG Shift Shaft Oil Seal	60	5	865876A03	CARRIER ASSEMBLY Bearing	72	39
866133A01	YOKE Splined Coupler End	60	20	866134T	YOKE Gear End	60	25
866135A01	YOKE Splined Coupler End	60	20	866136A01	CROSS AND BEARING	60	24
866137T	SOCKET Center	60	23	86614	O-RING (1.049 x .103)	30	22

Part No.	Description	Pg.	Ref.no	Part No.	Description	Pg.	Ref.no
866324	U BOLT	42	24	866324	U BOLT	42	24
866454A02	GIMBAL HOUSING ASSEMBLY	26	1	866456A01	GIMBAL RING ASSEMBLY	40	1
866457A01	BELL HOUSING ASSEMBLY	48	1	866459J00	HOUSING Driveshaft - Basic	56	1
866459J00	HOUSING Driveshaft - Basic	60	-	866459J04	HOUSING ASSEMBLY Driveshaft - Complete (16/19)	56	-
866459J04	HOUSING ASSEMBLY Driveshaft - Complete (16/19)	60	-	866462A02	COVER ASSEMBLY Top	56	12
866463A02	COVER ASSEMBLY Back	62	34	866464A02	TRIM CYLINDER ASSEMBLY Starboard	88	6
866465A02	TRIM CYLINDER ASSEMBLY Port	88	7	866507	CLAMP	26	25
866507	CLAMP	30	25	866562	STUD (.437-20 x 4.750) Stainless Steel	26	2
866562	STUD (.437-20 x 4.750) Stainless Steel	30	2	866562	STUD (.437-20 x 4.750) Stainless Steel	36	51
866563	STUD (.437-20 x 4.250) Stainless Steel	26	3	866563	STUD (.437-20 x 4.250) Stainless Steel	30	3
866563	STUD (.437-20 x 4.250) Stainless Steel	36	51	866718A01	SHAFT ASSEMBLY Upper Swivel	40	12
866718A01	SHAFT ASSEMBLY Swivel, Anodized	44	6	86739	TAB WASHER	64	15
86739	TAB WASHER	70	20	86739	TAB WASHER	78	14
86739	TAB WASHER	84	14	86748A1	BEARING ASSEMBLY Tapered Roller	64	14
86748A1	BEARING ASSEMBLY Tapered Roller	70	19	86748A1	BEARING ASSEMBLY Tapered Roller	78	13
86748A1	BEARING ASSEMBLY Tapered Roller	82	13	86749A1	SHIM KIT	64	16
86749A1	SHIM KIT	70	21	86749A1	SHIM KIT	78	15
86749A1	SHIM KIT	84	15	86752A1	BEARING ASSEMBLY Tapered Roller	64	25
86752A1	BEARING ASSEMBLY Tapered Roller	72	27	86752A1	BEARING ASSEMBLY Tapered Roller	78	21
86752A1	BEARING ASSEMBLY Tapered Roller	84	21	86754T	BEARING ASSEMBLY Roller	64	6
86754T	BEARING ASSEMBLY Roller	70	9	86754T	BEARING ASSEMBLY Roller Needle	76	6
86754T	BEARING ASSEMBLY Roller Needle	82	6	86763A04	BEARING ASSEMBLY Tapered Roller	60	30
86770	COLLAR	56	25	86776	LATCH	60	18
86801	SCREW Hinge Pin	40	5	86840A3	BELLOWS ASSEMBLY Universal Joint	48	8
86840A3	BELLOWS ASSEMBLY Universal Joint	50	9	86840A3	BELLOWS ASSEMBLY	52	8
87157A1	SHIM KIT	64	24	87157A1	SHIM KIT	72	26
87157A1	SHIM KIT	78	22	87157A1	SHIM KIT	84	22
87158	SCREW (.375-16 x 1.875)	62	38	87158	SCREW (.375-16 x 1.875)	62	43
87298A1	SEAL KIT Steering Cylinder	100	NS	87399A2	OVERHAUL KIT	44	NS
87399A2	OVERHAUL KIT	88	NS	87399A2	OVERHAUL KIT	92	_
87400A2	SEAL KIT	44	NS	87400A2	SEAL KIT	88	NS
87400A2	SEAL KIT	92	-	878089	PLUG Pipe (.0625-27)	52	20
87843	E RING	108	4	88075	RETAINER	94	7
881762A04	DECAL SET	4	NS	881763A04	DECAL SET	4	NS
88238A13	CABLE ASSEMBLY Ground	44	32	88238A13	CABLE ASSEMBLY Ground	88	28
88238A20	CABLE ASSEMBLY Ground Strap (6.750 Inches)	36	53	88238A20	CABLE ASSEMBLY Ground Strap (6.750 Inches)	36	64
88238A7	CABLE ASSEMBLY Ground Strap (3.160 Inches)	36	62	88242	RING Retaining	64	20
88242	RING Retaining	72	25	88242	RING Retaining	78	19
88242	RING Retaining	84	19	88243A3	COUPLING ASSEMBLY	64	19
88243A3	COUPLING ASSEMBLY	72	24	88243A3	COUPLING ASSEMBLY	78	18
88243A3	COUPLING ASSEMBLY	84	18	883166A2	RESERVOIR KIT With Filters and O-Ring	96	16
883167	SCREW (#8-32)	96	4	883608T19	GEAR HOUSING ASSEMBLY Complete	76	-
883608T20	GEAR HOUSING ASSEMBLY Complete	76	-	883608T21	GEAR HOUSING ASSEMBLY Complete	76	-
883608T22	GEAR HOUSING ASSEMBLY Complete	76	-	883608T23	GEAR HOUSING ASSEMBLY Complete	76	-
883608T24	GEAR HOUSING ASSEMBLY Complete	76	-	883608T27	GEAR HOUSING ASSEMBLY Basic - Long Style	76	1
883608T28	GEAR HOUSING ASSEMBLY Basic - Short Style	76	2	883608T29	GEAR HOUSING ASSEMBLY Complete	76	-
883608T30	GEAR HOUSING ASSEMBLY Complete	76	-	883608T31	GEAR HOUSING ASSEMBLY Complete	76	-
883608T32	GEAR HOUSING ASSEMBLY Complete	76	-	883608T33	GEAR HOUSING ASSEMBLY Complete	76	-
883608T34	GEAR HOUSING ASSEMBLY Complete	76	-	883608T35	GEAR HOUSING ASSEMBLY Basic - Long Style	76	1
883608T36	GEAR HOUSING ASSEMBLY Basic - Short Style	76	2	883608T49	GEAR HOUSING ASSEMBLY Complete	82	-
883608T50	GEAR HOUSING ASSEMBLY Complete	82	-	883608T51	GEAR HOUSING ASSEMBLY Complete	82	-
883608T52	GEAR HOUSING ASSEMBLY Complete	82	-	883608T53	GEAR HOUSING ASSEMBLY Complete	82	-
883608T54	GEAR HOUSING ASSEMBLY Complete	82	-	883608T55	GEAR HOUSING ASSEMBLY Basic	82	1
883608T56	GEAR HOUSING ASSEMBLY Basic	82	1	88416	SEAL Oil	26	9
88416	SEAL Oil	30	9	88416	SEAL Oil	34	8
884359T1	MODULE ASSEMBLY Gauge Driver	24	29	884359T1	MODULE ASSEMBLY Trim Sender	54	48
88543A3	CABLE ASSEMBLY	104	7	8866A17	GEAR HOUSING ASSEMBLY	64	1
8866A54	GEAR HOUSING ASSEMBLY	64	1	8866A61	GEAR HOUSING ASSEMBLY (15/19) (1.50:1 Ratio)	64	-

PARTS INDEX

Part No.	Description	Pg.	Ref.no	Part No.	Description	Pg.	Ref.no
8866A62	GEAR HOUSING ASSEMBLY (15/19) (1.50:1 Ratio)	64	-	8866A64	GEAR HOUSING ASSEMBLY	64	1
8866A80	GEAR HOUSING ASSEMBLY (17/18) (1.26:1 Ratio)	64	-	8866A81	GEAR HOUSING ASSEMBLY (15/17) (1.35:1 Ratio)	64	-
8866A82	GEAR HOUSING ASSEMBLY (17/18) (1.26:1 Ratio)	64	-	8866A83	GEAR HOUSING ASSEMBLY (15/17) (1.35:1 Ratio)	64	-
8866G01	GEAR HOUSING ASSEMBLY Basic	70	1	8866G03	GEAR HOUSING ASSEMBLY Complete (18/25) (1.65:1 Ratio)	70	-
8866G04	GEAR HOUSING ASSEMBLY Complete (16/27) (2.00:1 Ratio)	70	-	8866G06	GEAR HOUSING ASSEMBLY Complete (17/26) (1.81:1 Ratio)	70	-
8866J04	GEAR HOUSING ASSEMBLY Complete (16/27) (2.00:1 Ratio)	70	-	8866J07	GEAR HOUSING ASSEMBLY Complete (17/26) (1.81:1 & 2.00:1 Ratio)	70	-
8866J30	GEAR HOUSING ASSEMBLY Basic	70	1	88847A1	PLUG KIT Access Hole	28	-
88847A1	PLUG KIT Access Hole	32	-	888757A1	ANODE KIT Magnesium	66	-
888758A1	ANODE KIT Aluminum	66	-	888760Q02	ANODE KIT Magnesium	72	-
888761Q02	ANODE KIT Aluminum	72	-	888927028	SHIM (.028)	62	40
888927029	SHIM (.029)	62	40	888927030	SHIM (.030)	62	40
888927031	SHIM (.031)	62	40	888927032	SHIM (.032)	62	40
888927033	SHIM (.033)	62	40	888927034	SHIM (.034)	62	40
888927035	SHIM (.035)	62	40	888927036	SHIM (.036)	62	40
888927037	SHIM (.037)	62	40	888927038	SHIM (.038)	62	40
888927039	SHIM (.039)	62	40	888927040	SHIM (.040)	62	40
891589A01	SERVICE KIT	2	NS	891736T	MOTOR ASSEMBLY Complete	96	2
891737	BRUSH KIT	96	NS	891749001	PARTS MANUAL Bravo XR I - III Sport Master	2	NS
891868	O-RING	96	6	891868	O-RING	96	8
892608	BOARD ASSEMBLY Circuit - Radio Frequency Interference Filter	96	3	89302	WASHER (.203 x .406 x .040)	52	33
89496	FILTER	96	14	89498	O-RING Motor End	96	12
898290A10	DECAL SET	4	NS	89865	DRIVER TOOL Cup And Seal	114	-
89867T	DRIVER TOOL Bearing	114	-	89879	O-RING (.301 x .064)	98	6
8M0034453	STUD (7/16 x 2.19)	86	58	8M0041852	HOSE Hydraulic	46	62
8M0041852	HOSE Hydraulic	46	64	8M0042488	FITTING	46	63
8M0042488	FITTING	46	65	8M0046683	GEAR HOUSING ASSEMBLY Basic, Dual Water Pickup	70	1
8M0046735	GEAR HOUSING ASSEMBLY Complete (18/25) Dual Water Pickup (1.65:1 Ratio)	70	-	8M0046738	GEAR HOUSING ASSEMBLY Complete (16/27) Dual Water Pickup (2.00:1 Ratio)	70	-
8M0046831	GEAR HOUSING ASSEMBLY Complete (17/26) Dual Water Pick-Up (1.81:1 Ratio)	70	-	8M0057042	INSERT	26	16
8M0057042	INSERT	34	14	8M0060271	CABLE ASSEMBLY	104	13
8M0062102	HOSE Water	26	15	8M0062102	HOSE	34	15
8M0087162	WASHER (.9375 x 2.15625)	22	7	8M0091429	GEAR HOUSING ASSEMBLY Complete	82	-
8M0091432	GEAR HOUSING ASSEMBLY Complete	82	-	8M0091435	GEAR HOUSING ASSEMBLY Basic	82	2
8M0095951	PLATE ASSEMBLY Transom	22	1	8M0096216	GIMBAL HOUSING ASSEMBLY	30	1
8M0096217	GIMBAL HOUSING ASSEMBLY	30	1	8M0096564	WASHER Rubber U Shape	22	7
8M0096564	WASHER Rubber U Shape	22	7	8M0109467	BUSHING Rubber	30	16
8M0109475	GASKET	30	21	8M0109475	GASKET	32	44
8M0109511	HOSE	32	43	8M0111791	HOUSING Inlet Quick Connect	32	38
8M0111793	CONNECTOR	34	38	8M0114127	CLAMP	30	17
8M0114127	CLAMP	50	8	8M0114793	HOUSING Inlet Bib	32	40
8M0114816	PLATE ASSEMBLY Transom	22	1	8M0119239	BELL HOUSING ASSEMBLY	50	1
8M0119240	BELL HOUSING ASSEMBLY	50	1	8M0120061	CONNECTOR Hose Barb	32	39
8M0121128	DECAL M Icon Drive Housing	4	NS	8M0121128	DECAL M Icon Drive Housing	4	NS
8M0121131	DECAL RACING XR Drive Housing	4	NS	8M0121131	DECAL RACING XR Drive Housing	4	NS
8M0121132	DECAL ITS ITS Steering Cylinder	4	NS	8M0121132	DECAL ITS	100	25
8M0121133	DECAL Mercury ITS Gimbal Housing	4	NS	8M0121133	DECAL Mercury	34	31
8M0124395	HOSE ASSEMBLY KIT Water	30	15	8M0141781	CLAMP (44)	32	42
8M0155826	TOOL Water Hose Repair	30	20	8M0156390	BELL HOUSING ASSEMBLY	50	1
8M0156419	BELL HOUSING ASSEMBLY	50	1	8M0157880	SHIM	110	-
8M2005029	SEAL	26	5	8M2005029	SEAL	30	5
8M2008293	NUT (.437-20)	40	19	8M2015913	PLUG (.250-28 x .320)	26	7
8M2015913	PLUG (.250-28 x .320)	30	7	8M8021152	BLOCK ASSEMBLY Adaptor - With Check Valves	22	26
8M8025133	ADAPTER KIT Transient Voltage Suppressor	94	33	90084	SCREW (.437-14 x 1.500)	66	45
90084	SCREW (.437-14 x 1.500)	72	47	90188	SCREW (#10-24 x .500) Stainless Steel	52	29
901921	SCREW (.250-20 x .750) Stainless Steel With Nylon Patch	36	56	90244A1	DRIVER AND PULLER ASSEMBLY	110	-

Part No.	Description	Pg.	Ref.no
90285	SCREW (.312-18 x .625)	94	24
90412	WRAPPING (1.16 Feet Bulk) Cut As Required	22	11
92914A1	SHIM KIT	70	15
92914A1	SHIM KIT	82	7
92916	SPACER	72	22
92916	SPACER	84	16
93702	WASHER (.250 External Star) Bonding Strap Stud	36	52
94330	NUT (.250-20) Brass	94	14
95084A10	CABLE ASSEMBLY (5.00 Inches) Red	104	11
95084A9	CABLE ASSEMBLY (91.00 Inches) Red/Purple Strip	104	11
95353A1	VALVE KIT Thermal Relief	96	NS
97351	KEEPER	56	26
97522	NUT (.625-18)	62	33
98230A1	SHAFT ASSEMBLY Upper Swivel	40	12
98260	SCREW (.375-16 x .620)	94	1
98262T1	CLAMP Top Pin	44	8
98356	BUSHING Upper	30	6
983571	BUSHING Lower	26	4
983571	BUSHING Lower	34	3
98548	WASHER (1.125)	40	13
98703A26	TRIM CYLINDER ASSEMBLY Port	88	7
98703T	TUBE Port Cylinder	92	20
98704A29	TRIM CYLINDER ASSEMBLY Starboard	44	25
98794	SCREW (.375-16 x 1.00)	62	37
988231	GASKET	30	29
98825A13	COVER KIT	34	23
98825A4	MANIFOLD ASSEMBLY	26	30
98869A17	ELECTRODE ASSEMBLY With Quick Connectors	104	1
99204	SCREW (.437-14 x 1.00) Stainless Steel	52	36
99353	SWIVEL PIN Lower	26	17
99353	SWIVEL PIN Lower	34	16
99903	HOSE Trim Cylinder	88	27
99940A2	CONTINUITY KIT	20	-
NSS	NOT SOLD SEPARATE Grounding Cable Assembly	22	18
NSS	NOT SOLD SEPARATE Seal With Tabs	26	12
NSS	NOT SOLD SEPARATE SHIFT LEVER	60	15
NSS	NOT SOLD SEPARATE Propeller Hub	78	38
NSS	NOT SOLD SEPARATE SCREW (M10 x 85)	92	1
NSS	NOT SOLD SEPARATE GUIDE	92	3
NSS	NOT SOLD SEPARATE PIN	92	5
NSS	NOT SOLD SEPARATE EYELET	92	7
NSS	NOT SOLD SEPARATE BALL (.250 Diameter)	92	9
NSS	NOT SOLD SEPARATE SPRING	92	11
NSS	NOT SOLD SEPARATE O RING	92	13
NSS	NOT SOLD SEPARATE O RING	92	15
NSS	NOT SOLD SEPARATE O RING	92	17
NSS	NOT SOLD SEPARATE RING-Retaining	92	19
NSS	NOT SOLD SEPARATE PLUG	100	4
NSS	NOT SOLD SEPARATE PISTON	100	11
NSS	NOT SOLD SEPARATE PISTON ROD	100	13
NSS	NOT SOLD SEPARATE O RING-(Component of Seal Kit)	100	16
NSS	NOT SOLD SEPARATE WASHER-(Component of Seal Kit)	100	19

Part No.	Description	Pg.	Ref.no
90338A1	PULLER TOOL Bearing Carrier	114	-
92914A1	SHIM KIT	64	10
92914A1	SHIM KIT	76	7
92916	SPACER	64	17
92916	SPACER	78	16
93505	SPRING	56	23
94275	LINK Connector	94	12
94926	O-RING (2.489 x .070)	36	55
95084A10	CABLE ASSEMBLY (5.00 Inches) Red	106	13
95084A9	CABLE ASSEMBLY (91.00 Inches) Red/Purple Strip	106	11
96158T	SOLENOID	94	6
97387	O-RING	56	15
97934	SCREW (.500-20 x 5.370) Special	22	4
98230A1	SHAFT ASSEMBLY Swivel	44	6
98262A1	LEVER ASSEMBLY Steering	40	14
98356	BUSHING Upper	26	6
98356	BUSHING Upper	34	5
983571	BUSHING Lower	30	4
98533	NUT (.437-20)	44	13
98548	WASHER (1.125)	44	7
98703A29	TRIM CYLINDER ASSEMBLY Port	44	26
98704A26	TRIM CYLINDER ASSEMBLY Starboard	88	6
98704T	TUBE Starboard Cylinder	92	20
988231	GASKET	26	29
988231	GASKET	34	22
98825A13	COVER KIT	106	2
98825A4	MANIFOLD ASSEMBLY	30	30
98869A18	ELECTRODE ASSEMBLY	106	1
99299	SPACER (.520 x .870 x .630)	22	6
99353	SWIVEL PIN Lower	32	35
99902	HOSE Trim Cylinder	88	26
99904	HOSE Trim Cylinder To Connector	88	5
F9283	SHIM (.003)	84	22
NSS	NOT SOLD SEPARATE Grounding Cable Assembly	22	19
NSS	NOT SOLD SEPARATE Seal With Tabs	30	12
NSS	NOT SOLD SEPARATE HUB-Propeller	66	41
NSS	NOT SOLD SEPARATE Propeller Hub	84	38
NSS	NOT SOLD SEPARATE WASHER	92	2
NSS	NOT SOLD SEPARATE BALL-Steel (.109 Diameter)	92	4
NSS	NOT SOLD SEPARATE SPRING	92	6
NSS	NOT SOLD SEPARATE PISTON	92	8
NSS	NOT SOLD SEPARATE PUSHER	92	10
NSS	NOT SOLD SEPARATE O RING	92	12
NSS	NOT SOLD SEPARATE SPRING	92	14
NSS	NOT SOLD SEPARATE SCRAPER ROD	92	16
NSS	NOT SOLD SEPARATE WASHER	92	18
NSS	NOT SOLD SEPARATE PLUG	100	3
NSS	NOT SOLD SEPARATE O-RING-(Component of Seal Kit)	100	10
NSS	NOT SOLD SEPARATE O-RING-(Component of Seal Kit)	100	12
NSS	NOT SOLD SEPARATE ROD END	100	15
NSS	NOT SOLD SEPARATE ROD SCRAPER-(Component of Seal Kit)	100	18
NSS	NOT SOLD SEPARATE RING-Retaining-(Component of Seal Kit)	100	20