Power Trim/Tilt Electric Start with Warning Horn

a - Ignition/Choke Switch
b - Emergency Stop Switch
c - Neutral Start Switch
d - Tachometer/Accessories Harness Connector
e - Wiring Harness Connector
f - Warning Horn
g - Trim/Tilt Switch

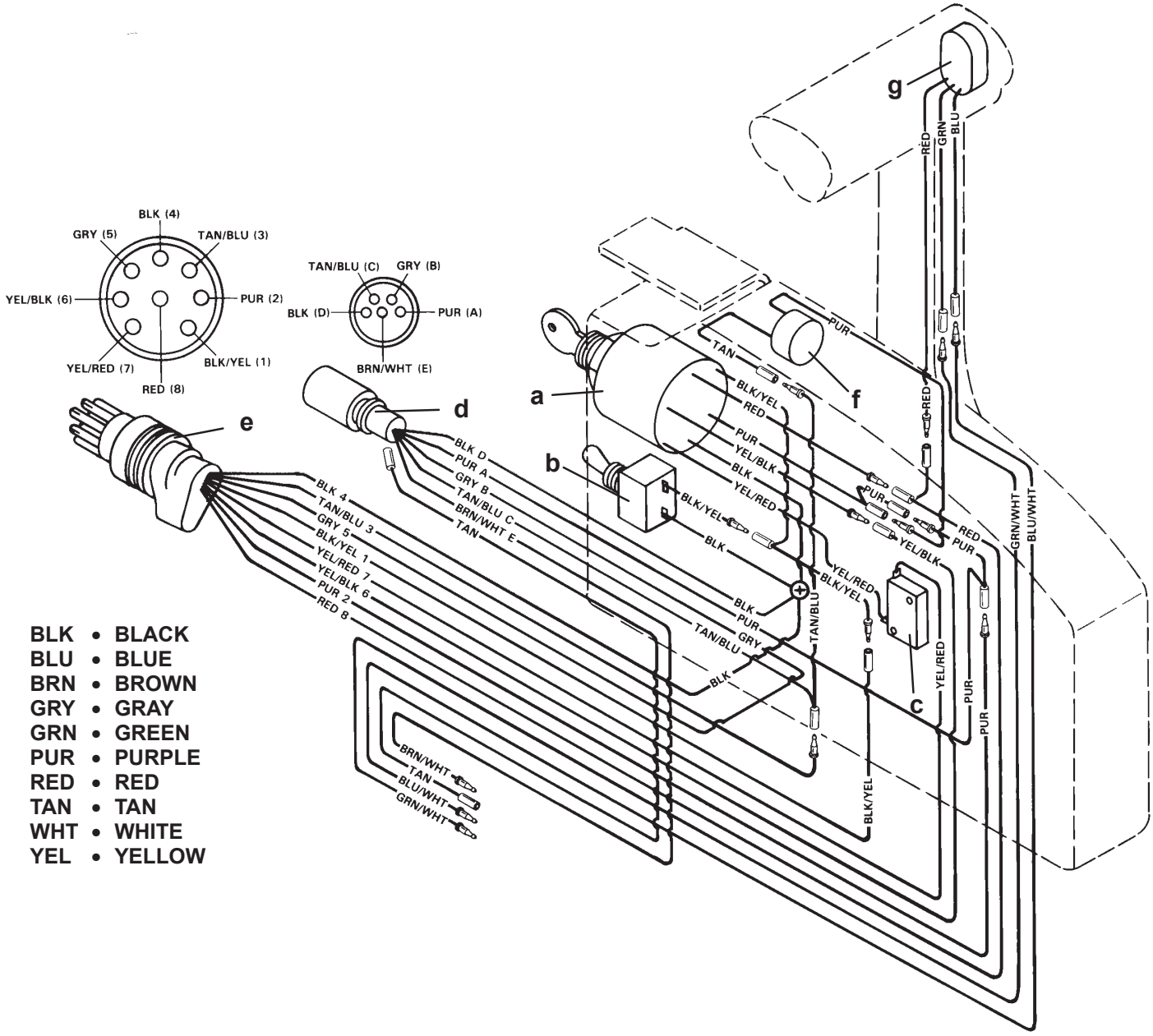

23891