KOE

JDI Group

Kaohsiung Opto-Electronics Inc.

FOR MESSRS:_____ DATE: Mar .19th ,2013

CUSTOMER'S ACCEPTANCE SPECIFICATIONS

SP14N01L6ALCZ

Contents

No.	ITEM	SHEET No.	PAGE
1	COVER	7B64PS 2701- SP14N01L6ALCZ-8	1-1/1
2	RECORD OF REVISION	7B64PS 2702- SP14N01L6ALCZ-8	2-1/3~3/3
3	GENERAL SPECIFICATION	7B64PS 2703- SP14N01L6ALCZ-8	3-1/1
4	ABSOLUTE MAXIMUM RATINGS	7B64PS 2704- SP14N01L6ALCZ-8	4-1/1
5	ELECTRICAL CHARACTERISTICS	7B64PS 2705- SP14N01L6ALCZ-8	5-1/1
6	OPTICAL CHARACTERISTICS	7B64PS 2706- SP14N01L6ALCZ-8	6-1/3~3/3
7	BLOCK DIAGRAM	7B64PS 2707- SP14N01L6ALCZ-8	7-1/1
8	INTERFACE TIMING	7B64PS 2708- SP14N01L6ALCZ-8	8-1/2~2/2
9	OUTLINE DIMENSIONS	7B64PS 2709- SP14N01L6ALCZ-8	9-1/3~3/3
10	APPEARANCE STANDARD	7B64PS 2710- SP14N01L6ALCZ-8	10-1/3~3/3
11	PRECAUTION IN DESIGN	7B64PS 2711- SP14N01L6ALCZ-8	11-1/2~2/2
12	DESIGNATION OF LOT MARK	7B64PS 2712- SP14N01L6ALCZ-8	12-1/1
13	PRECAUTION FOR USE	7B64PS 2713- SP14N01L6ALCZ-8	13-1/1

ACCEPTED BY:_____ PROPOSED BY:_____

RECORD OF REVISION

<table>
<tr><th>DATE</th><th>SHEET No.</th><th>SUMMARY</th></tr>
<tr><td rowspan="2">Oct.22,'04</td><td>7B64PS 2705 – SP14N01L6ALCZ-2
PAGE 5 – 1/1</td><td>5.2 ELECTRICAL CHARACTERISTICS OF BACKLIGHT
Added LED circuit diagram
Changed
<table>
<tr><th>SYMBOL</th><th>MIN.</th><th>TYP.</th><th>MAX.</th></tr>
<tr><td>VLED</td><td>-</td><td>(T.B.D)</td><td>-</td></tr>
<tr><td>ILED</td><td>-</td><td>(T.B.D)</td><td>-</td></tr>
</table>
↓
<table>
<tr><th>SYMBOL</th><th>MIN.</th><th>TYP.</th><th>MAX.</th></tr>
<tr><td>VLED</td><td>4.8</td><td>5.0</td><td>5.2</td></tr>
<tr><td>ILED</td><td>-</td><td>130</td><td>140</td></tr>
</table></td></tr>
<tr><td>7B64PS 2706 – SP14N01L6ALCZ-2
PAGE 6 – 3/3</td><td>6.2 OPTICAL CHARACTERISTICS OF BACKLIGHT
Changed
ILED：(T.B.D) → 130</td></tr>
<tr><td>Jun.17,'05</td><td>7B64PS 2705 – SP14N01L6ALCZ-3
PAGE 5 – 1/1</td><td>5.2 ELECTRICAL CHARACTERISTICS OF BACKLIGHT
Changed
 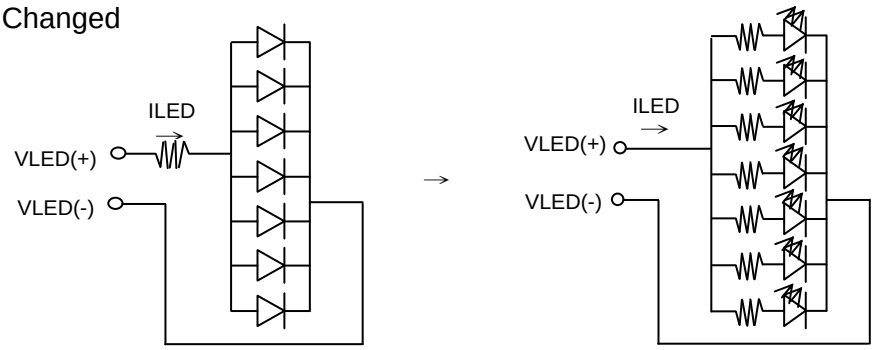
</td></tr>
<tr><td>May.28,'07</td><td>7B64PS 2704-SP14N01L6ALCZ-4
Page 4-1/1</td><td>4.2 ENVIRONMENTAL ABSOLUTE MAXIMUM RATINGS
Added
Operating Life : (40,000h)</td></tr>
</table>

DATE	SHEET No.	SUMMARY
May.28,'07	7B64PS 2705-SP14N01L6ALCZ-4 Page 5-1/1	5.2 ELECTRICAL CHARACTERISTICS OF BACKLIGHT Revised :

ITEM	TYP.	MAX.
Power Supply Current for LED	130	140

↓

ITEM	TYP.	MAX.
Power Supply Current for LED	80	90

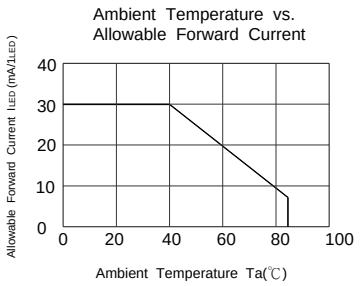

→

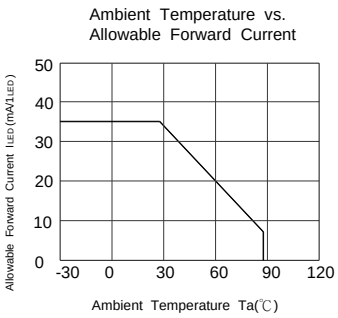

	7B64PS 2706-SP14N01L6ALCZ-4 Page 6-3/3	6.2 OPTICAL CHARACTERISTICS OF BACKLIGHT Revised :

ITEM	MIN.	TYP.	NOTE
Brightness	120	150	ILED=130mA

↓

ITEM	MIN.	TYP.	NOTE
Brightness	170	200	ILED=(80)mA

	7B64PS 2709-SP14N01L6ALCZ-4 Page 9-3/3	9.3 Internal Pin Connection Changed : CFL I / F : Mitsumi M63M83 – 04 → JAE IL-G-4S-S3C2-SA
	7B64PS 2712-SP14N01L6ALCZ-4 Page 12-1/1	12. DESIGNATION OF LOT MARK Added

REV No.	ITEM	LOT No.
-	CFL I/F Connector : Mitsumi M63M83 - 04	-
A	1.CFL I/F Connector : JAE IL-G-4S-S3C2-SA 2.Operating Life (40,000h)	7102T

<table>
<tr><th>DATE</th><th>SHEET No.</th><th>SUMMARY</th></tr>
<tr><td>Sep.11,’09</td><td>7B64PS 2712-SP14N01L6ALCZ-5
Page 12-1/1</td><td>12. DESIGNATION OF LOT MARK
Added
<table><tr><th>REV No.</th><th>ITEM</th><th>LOT No.</th></tr><tr><td>B</td><td>M count IC change</td><td>-</td></tr></table></td></tr>
<tr><td rowspan="2">Mar.25,’10</td><td>7B64PS 2703-SP14N01L6ALCZ-6
Page 3-1/1</td><td>3. GENERAL SPECIFICATIONS
Changed :
(11) LCD Controller T6963C / TOSHIBA
↓
T6963C equivalent</td></tr>
<tr><td>7B64PS 2712-SP14N01L6ALCZ-6
Page 12-1/1</td><td>12. DESIGNATION OF LOT MARK
Added
<table><tr><th>REV No.</th><th>ITEM</th><th>NOTE</th></tr><tr><td>C</td><td>Controller IC Change</td><td>PCN0768</td></tr></table></td></tr>
<tr><td>May 01,’12</td><td>All pages</td><td>Company name changed:
KAOHSIUNG HITACHI ELECTRONICS CO.,LTD.
↓
KAOHSIUNG OPTO-ELECTRONICS INC.</td></tr>
<tr><td>Mar.19,’13</td><td>7B64PS 2712-SP14N01L6ALCZ-8
Page 12-1/1</td><td>12. DESIGNATION OF LOT MARK
Added
<table><tr><th>REV No.</th><th>ITEM</th><th>NOTE</th></tr><tr><td>D</td><td>Ceramic Resonator Change</td><td>PCN0858</td></tr></table></td></tr>
<tr><td></td><td></td><td></td></tr>
</table>

3. GENERAL SPECIFICATIONS

(1)	Part Name	SP14N01L6ALCZ
(2)	Outer Dimensions	159.4(W)mm x 101.0(H)mm x 11.0(D) mm (max.)
(3)	Viewing Area	123 mm min. x 68 mm min.
(4)	Dot Size	0.48(W)min. x 0.48(H)min.
(5)	Dot Pitch	0.50(W)mm x 0.50(H)mm
(6)	Dot Number (Resolution)	240 (W) x 128 (H)
(7)	Duty Ratio	1/128
(8)	LCD Type	Transmissive type F-STN With anti-glare type upper polarizer
(9)	Viewing Direction	6 O'clock
(10)	Back Light Type	LED (Color : White).
(11)	LCD Controller	T6963C equivalent

4. ABSOLUTE MAXIMUM RATINGS

4.1 ELECTRICAL ABSOLUTE MAXIMUM RATINGS

VSS=0V:STANDARD

ITEM	SYMBOL	MIN.	MAX.	UNIT	COMMENT
Power Supply For Logic	VDD-VSS	0	7.0	V	
Input Signal Voltage	Vi	-0.3	VDD+0.3	V	Note 1
Input Signal Current	Ii	0	1	A	
Static Electricity	VESD0	-	±100	V	Note 1,2,3
	VESD1	-	±10	kV	Note 1,2,4

Note 1 : Make certain you are grounded when handling LCM.
Note 2 : Energy storage capacitance 200pF , discharge resistance 250Ω Ta=25℃ , 60%RH.
Note 3 : Contact discharge to I/F connector pins.
Note 4 : Contact discharge to front metal bezel.

4.2 ENVIRONMENTAL ABSOLUTE MAXIMUM RATINGS

ITEM	OPERATING		STORAGE		COMMENT
	MIN.	MAX.	MIN.	MAX.	
Ambient Temperature	-10℃	60℃	-20℃	70℃	Note 2,3
Humidity	Note 1		Note 1		without condensation
Vibration	-	2.45m/s^2 0.25G	-	11.76m/s^2 1.2G Note 5	Note 4 1h max.
Shock	-	29.4m/s^2 3 G	-	490.0m/s^2 50 G Note 5	XYZ directions
Corrosive Gas	Not Acceptable		Not Acceptable		
Operating Life Note 7	40,000 h Note 6		-		At 25℃ , I_{LED}=80mA max.

Note 1 : Ta≦40℃ : 85%RH max.
Ta＞40℃ : Absolute humidity must be lower than the humidity of 85%RH at 40℃

Note 2 : Ta at -20℃ < 48h, at 70℃< 168h.

Note 3 : Background color changes slightly depending on ambient temperature.
This phenomenon is reversible.

Note 4 : 5Hz~100Hz (except resonance frequency)

Note 5 : This module should be operated normally after finishing the test.

Note 6 : When brightness reached 50% of initial brightness.

Note 7 : Life time is estimated data.

5. ELECTRICAL CHARACTERISTICS

5.1 ELECTRICAL CHARACTERISTICS

I T E M	SYMBOL	CONDITION	MIN.	TYP.	MAX.	UNIT
Power Supply Voltage For Logic	VDD-VSS	-	4.75	5.0	5.25	V
LC driver Circuit Power Supply Voltage	VEE-VSS	-	-15.5	-15.0	-14.5	V
Input Signal Voltage	Vi	H LEVEL	0.8VDD	-	VDD	V
		L LEVEL	0	-	0.2VDD	V
Power Supply Current For Logic (Note 1)	IDD	VDD-VSS=5.0V VEE-VSS=-15.0V	-	11.7	14.0	mA
Power Supply Current For LCD (Note 1)	IEE	VDD-VSS=5.0V VEE-VSS=-15.0V	-	2.5	4.0	mA
Recommended LC Driving Voltage (Note 2)	VDD-V0	Ta= 0℃ , ϕ = 0°	15.9	16.9	17.9	V
		Ta=25℃ , ϕ =0°	14.8	15.8	16.8	V
		Ta=50℃ , ϕ =0°	14.2	15.2	16.2	V

Note 1 : Test pattern is all “Q” , VDD-V0=15.8V , Ta=25℃

Note 2 : Recommended LC driving voltage may fluctuate about ±1.0V by each module test pattern is all “Q”.

5.2 ELECTRICAL CHARACTERISTICS OF BACKLIGHT

Ta=25℃

I T E M	SYMBOL	CONDITION	MIN.	TYP.	MAX.	UNIT
Power Supply Voltage for LED	VLED	-	4.8	5.0	5.2	V
Power Supply Current for LED	ILED	VLED=5.0V	-	80	90	mA

Note 1 : The ILED changes depending on ambient temperature.

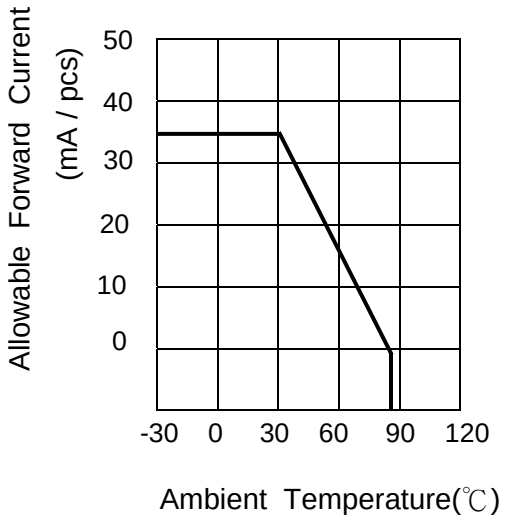

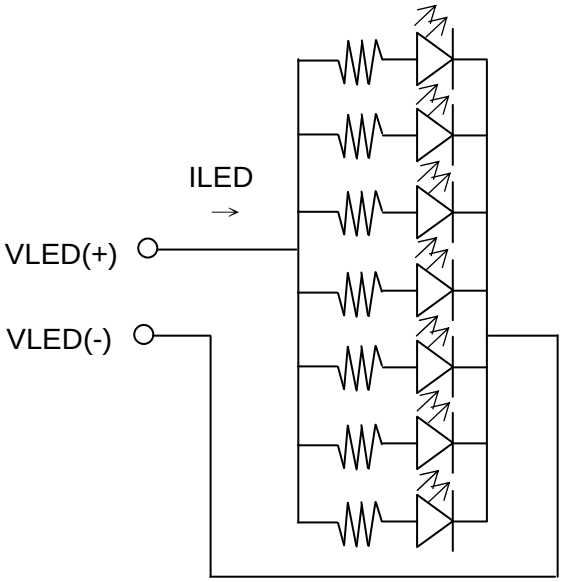

6. OPTICAL CHARACTERISTICS

6.1 OPTICAL CHARACTERISTICS OF LCD

Ta=25℃(Backlight On)

ITEM	SYMBOL	CONDITION	MIN.	TYP.	MAX.	UNIT	REMARKS
Viewing Area	θ	K≧2.0	-	90	-	deg	1
	ϕ			80			
Contrast Ratio	K	ϕ=0°, θ=0°	-	20	-	-	2
Response Time (Rise)	tr	ϕ=0°, θ=0°	-	330	-	ms	3
Response Time (Fall)	tf	ϕ=0°, θ=0°	-	150	-	ms	3

(Measure condition by KOE)

Note1. Definition of Viewing Angle

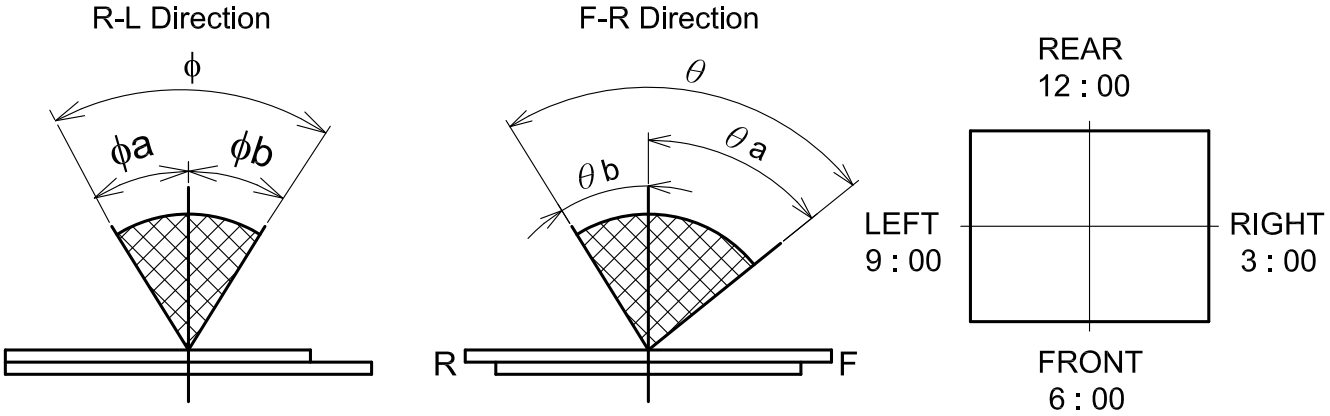

*For This Product

The Viewing Direction is 6 O'clock ($\theta a > \theta b$)

$\theta = \theta a + \theta b$; $\phi = \phi a + \phi b$

Note2. Definition of contrast"K"

$$K = \frac{\text{Brightness on selected dot (B1)}}{\text{Brightness on non-selected dot (B2)}}$$

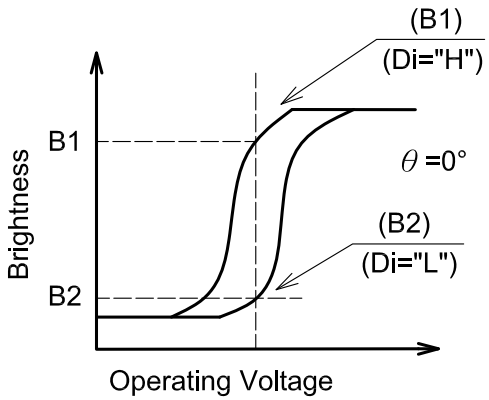

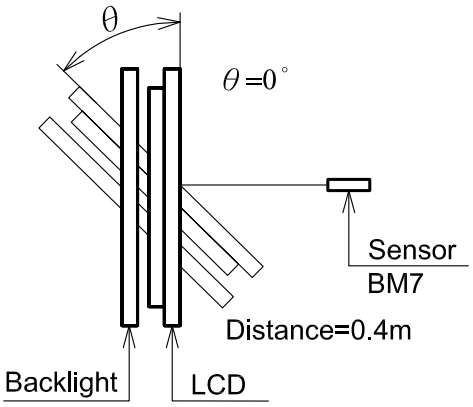

Note 3 : Definition of optical response

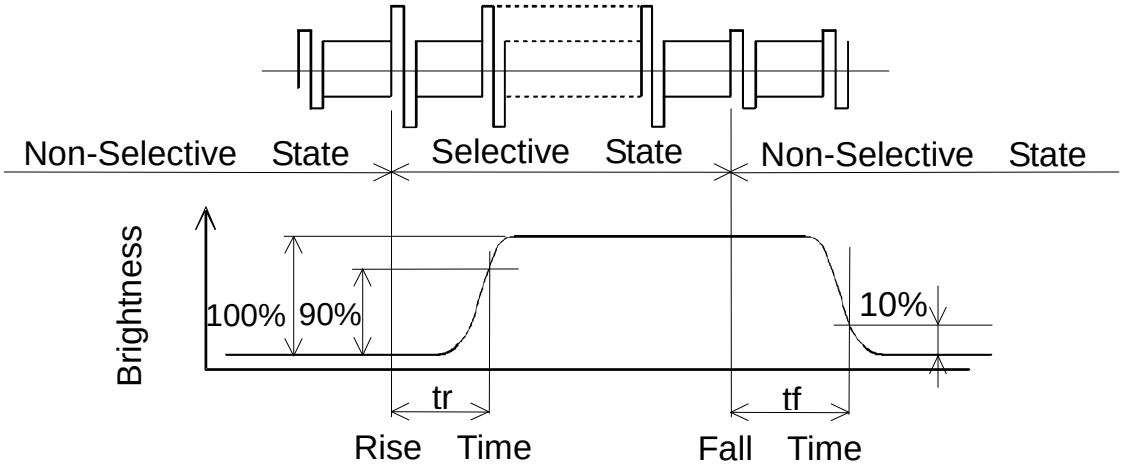

6.2 OPTICAL CHARACTERISTICS OF BACKLIGHT

ITEM	MIN.	TYP.	MAX.	UNIT	REMARKS
Brightness	170	200	-	cd/m^2	ILED=80mA
Brightness Uniformity	-	-	±35	%	Note 1,

Ta=25℃, Display data should be all "ON".
The LCD driving voltage should be adjusted at the voltage where the peak contrast is obtained.

Note 1 : Measure of the following 9 places on the display.

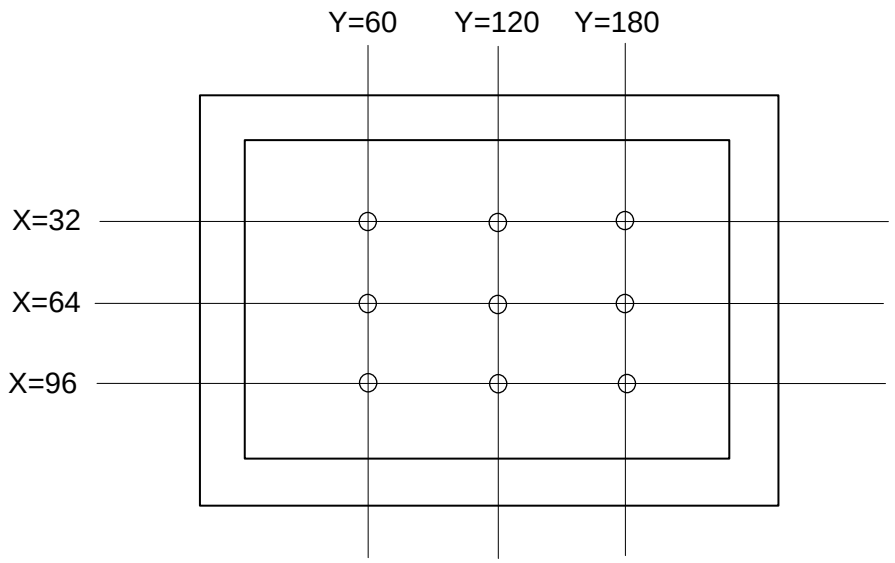

Definition of the brightness tolerance.

$$\left(\frac{\text{Max. or min. Brightness - Average Brightness}}{\text{Average Brightness}} \right) \times 100\%$$

7. BLOCK DIAGRAM

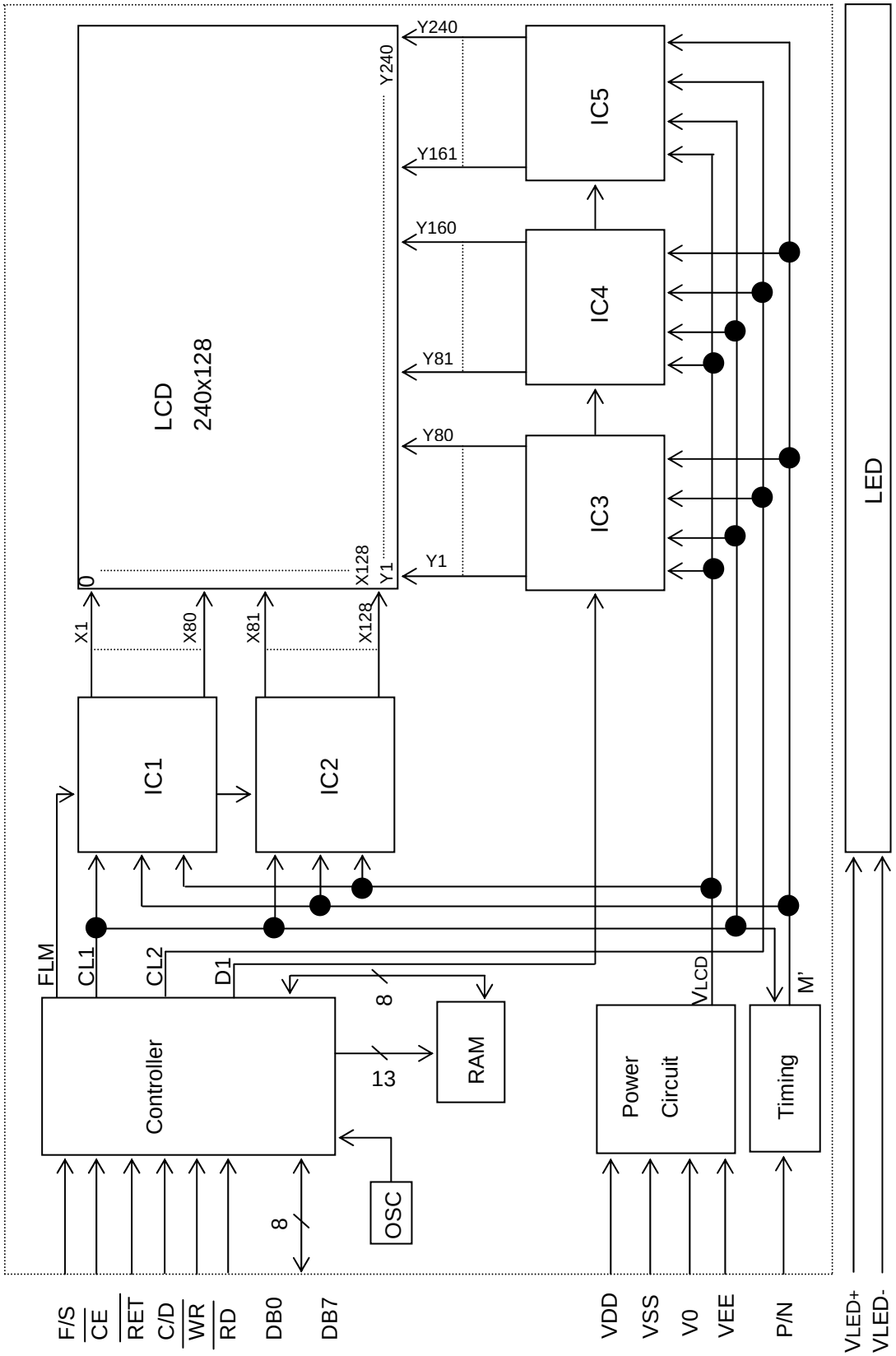

KAOHSIUNG OPTO-ELECTRONICS INC.	SHEET NO.	7B64PS 2707-SP14N01L6ALCZ-8	PAGE	7-1/1

8. INTERFACE TIMING

8.1 INTERFACE TIMING

ITEM	SYMBOL	MIN.	TYP.	MAX.	UNIT
C / D Setup Time	tCDS	100	-	-	ns
C / D Hold Time	tCHD	10	-	-	ns
$\overline{CE}$, $\overline{RD}$, $\overline{WR}$ Pulse Width	$t\overline{CE}$, $t\overline{RD}$, $t\overline{WR}$	80	-	-	ns
Data Setup Time	tDS	80	-	-	ns
Data Hold Time	tDH	40	-	-	ns
Access Time	tACC	-	-	150	ns
Output Hold Time	tOH	10	-	50	ns

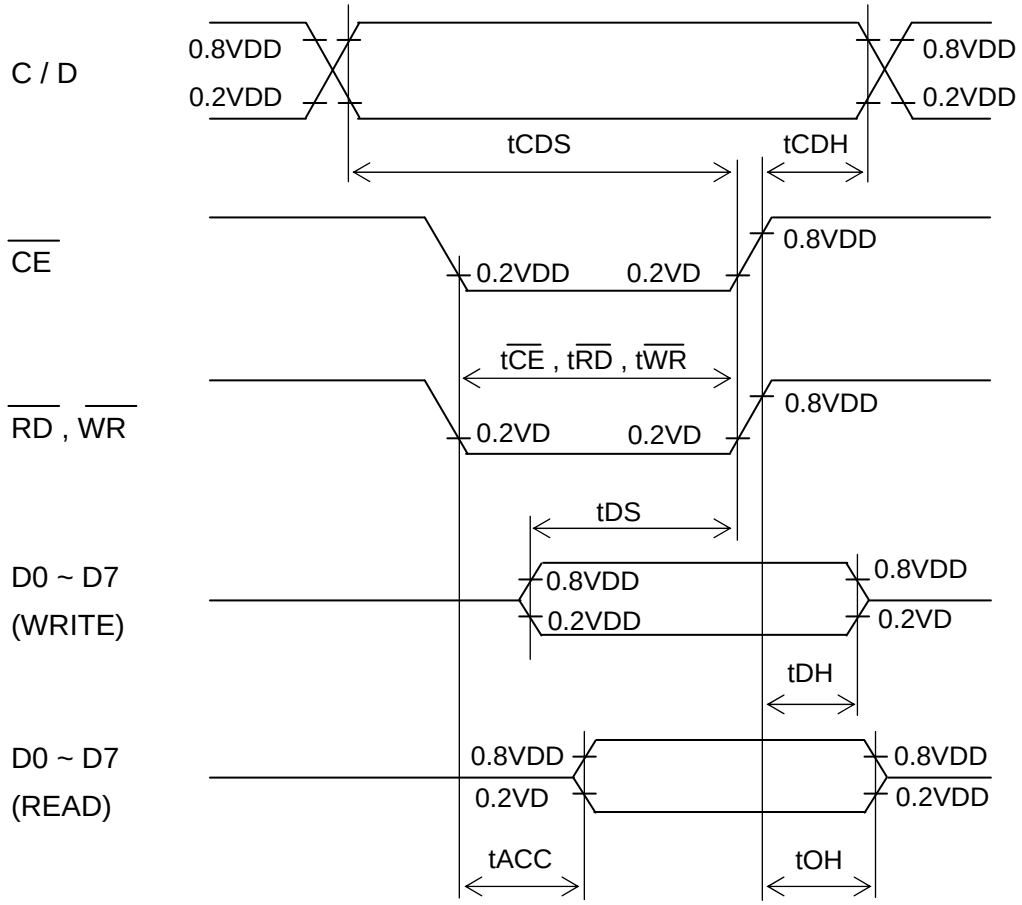

8.2 TIMING OF POWER SUPPLY AND INTERFACE SIGNAL

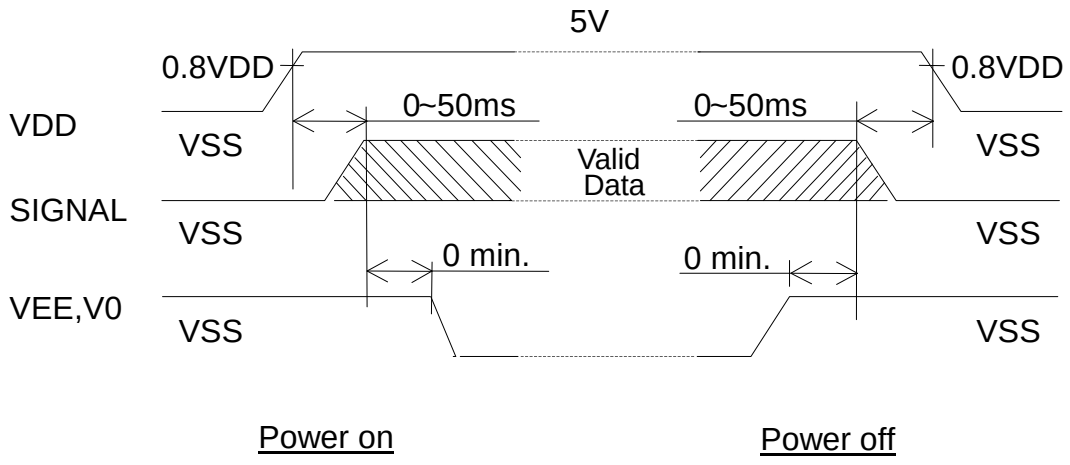

The missing pixels may occur when the LCM is driven beyond above power interface timing sequence.

8.3 POWER SUPPLY FOR LCM (EXAMPLE)

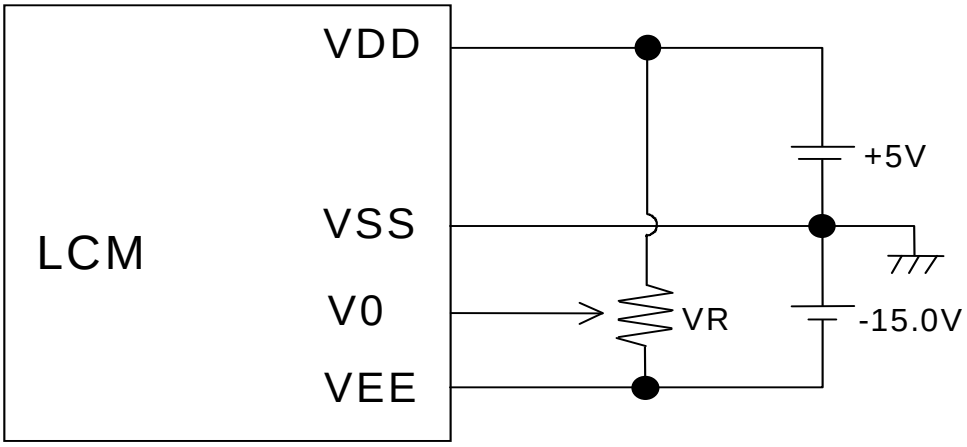

Recommend:

VR:10~20kΩ

VDD-V0 : LCD driving voltage

9. OUTLINE DIMENSIONS

9.1 OUTLINE DIMENSIONS

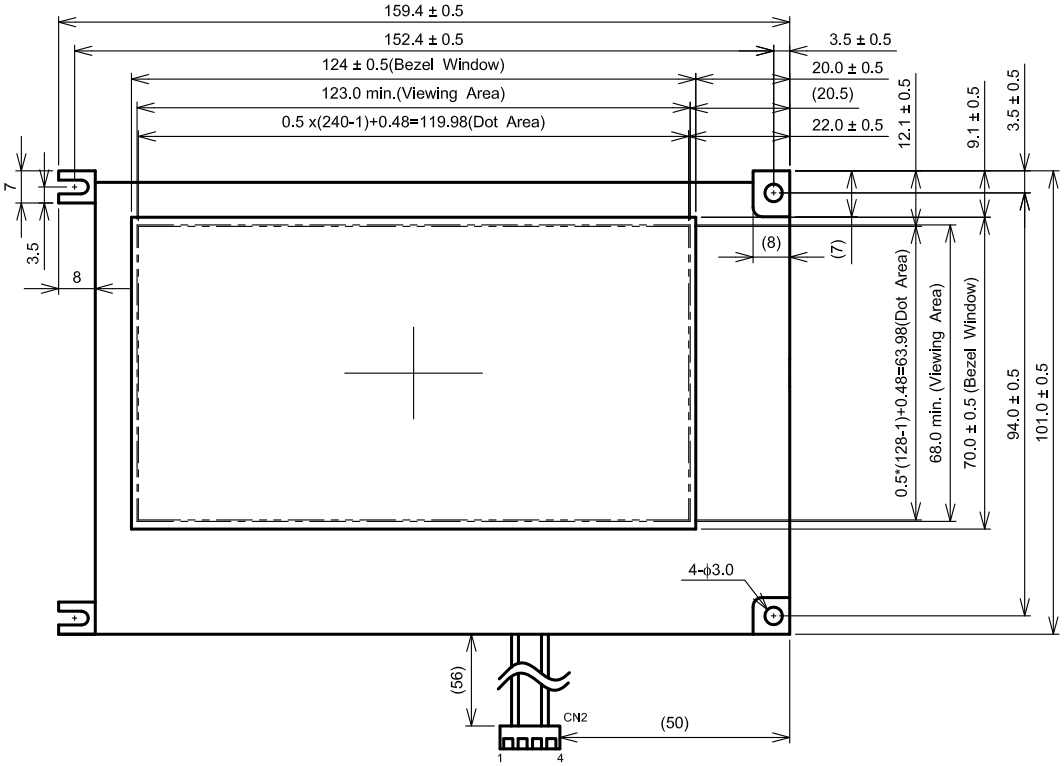

Front View

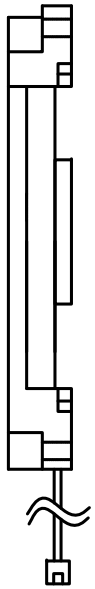

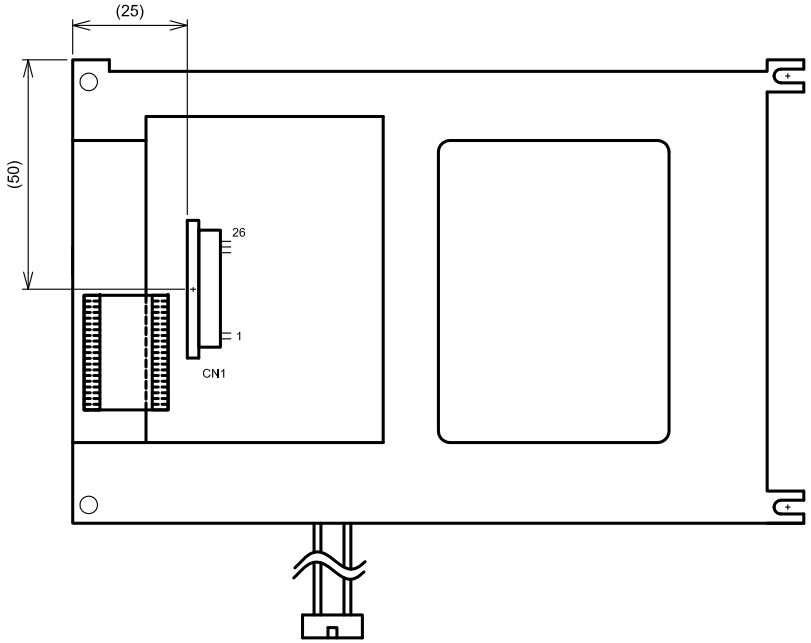

Rear View

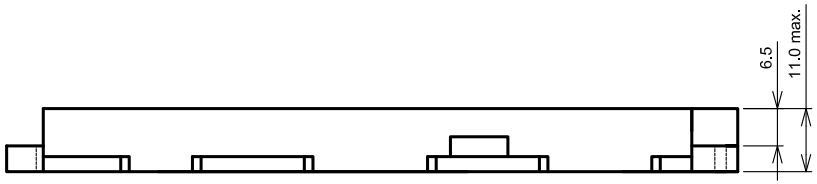

Scale : NTS
Unit : mm

KAOHSIUNG OPTO-ELECTRONICS INC.	SHEET No.	7B64PS 2709-SP14N01L6ALCZ-8	PAGE	9-1/3

9.2 DISPLAY PATTERN

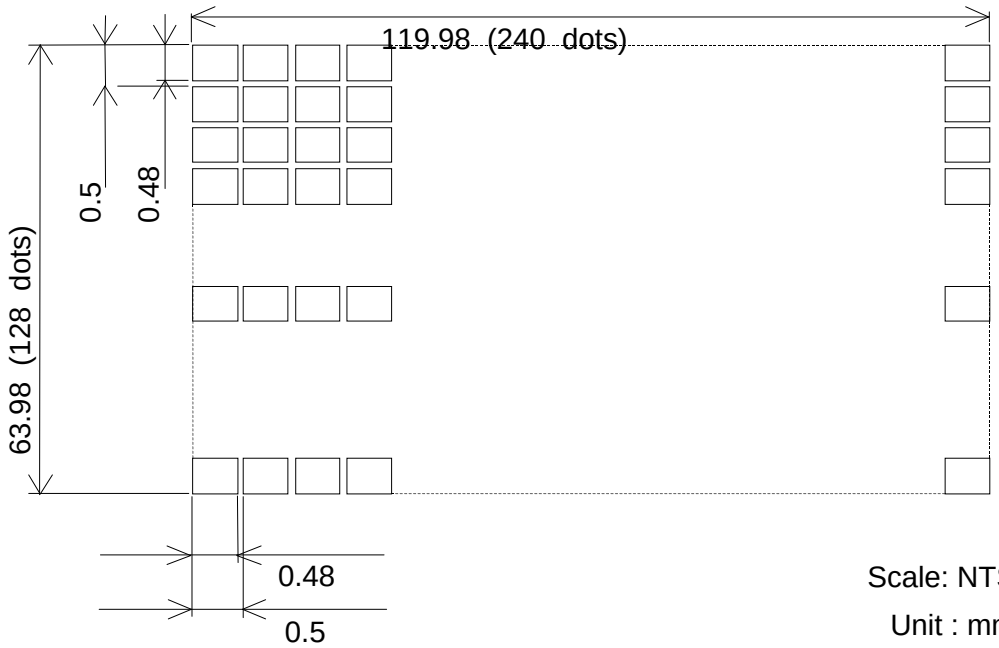

Scale: NTS

Unit : mm

Measurement tolerance : ±0.1

9.3 INTERNAL PIN CONNECTION

CN1 : Pitch 1.0mm 26pins connector
Suitable connector : Molex : 52207-2690

PIN No.	SYMBOL	FUNCTION
1	VSS	GND
2	VDD	Power supply for logic
3	V0(Input)	Power supply for LCD drive
4	C/D	$\overline{WR}$="L" : C/D="H" Command write C/D="L" Data write $\overline{RD}$="L" : C/D="H" Status read C/D="L" Data read
5	$\overline{WR}$	Data write (Data write at "L")
6	$\overline{RD}$	Data read (Read data at "L")
7	DB0	Data bus
8	DB1	
9	DB2	
10	DB3	
11	DB4	
12	DB5	
13	DB6	
14	DB7	
15	$\overline{CE}$	Chip enable ($\overline{CE}$ must be "L")
16	$\overline{RET}$	Reset
17	VEE	Power supply for LCD drive
18	$\overline{D.OFF}$	VDD/Display , GND/Display off
19	F/S	Character font select : F/S="H" 6*8Font F/S="L" 8*8Font
20	P/N	Display mode reverse.
21	NC	No connection
22	NC	No connection
23	NC	No connection
24	NC	No connection
25	NC	No connection
26	NC	No connection

CN2 : JAE IL-G-4S-S3C2-SA

PIN No.	SYMBOL	FUNCTION
1	VLED-	GND
2	NC	No connection
3	NC	No connection
4	VLED+	Power supply for LED

10. APPEARANCE STANDARD

10.1 APPEARANCE INSPECTION CONDITION

Visual inspection should be done under the following condition.

(1) The inspection should be done under in the dark room.

(2) The CFL should be lighted with the prescribed inverter.

(3) The distance between eyes of an inspector and the LCD module is 25cm.

(4) The viewing zone is shown the figure .
Viewing angle ≦25°

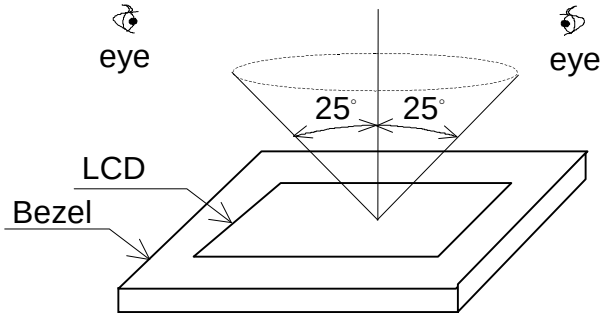

10.2 DEFINITION OF EACH ZONE

A zone : Within the Viewing Area specified at page 9-1/3 of this document.

B zone : Area between the Edge of LCM and the Viewing Area specified at page 9-1/3 of this document.

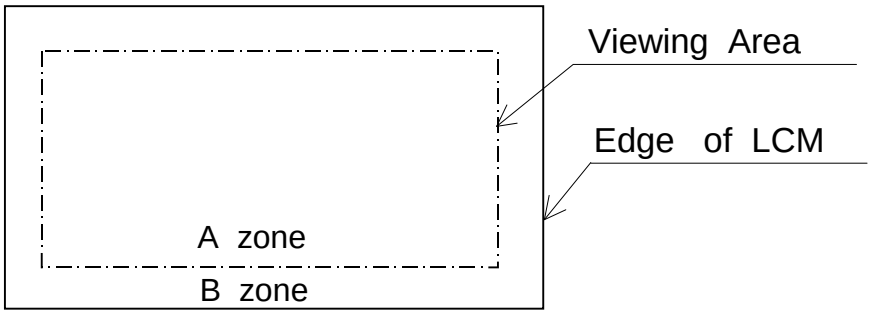

10.3 APPEARANCE SPECIFICATION

*) If a problem occurs in respect to any of these items , both parties(Customer and KOE) will discuss in more detail

No.	ITEM	CRITERIA			A	B
L C D	Scratches	Serious one is not allowed			*	-
	Dent	Serious one is not allowed			*	-
	Wrinkles in Polarizer	Serious one is not allowed			*	-
	Bubbles	Average Diameter D(mm)	Maximum Number Acceptable		O	-
		D≦0.2	Ignore			
		0.2＜D≦0.3	12			
		0.3＜D≦0.5	3			
		0.5＜D	None			
	Stains, Foreign Materials, Dark Spot	Filamentous			O	-
		Length L(mm)	Width W(mm)	Maximum Number Acceptable		
		L≦2.0	W≦0.03	Ignore		
		L≦3.0	0.03＜W≦0.05	6		
		L≦2.5	0.05＜W≦0.1	1		
		Round			O	-
		Average Diameter D(mm)	Maximum Number Acceptable	Minimum Space		
		D＜0.2	Ignore	-		
		0.2 ≦D＜0.33	8	10mm		
		0.33≦D	None	-		
		Total	Filamentous + Round = 10			
		Those wiped out easily are acceptable			O	O
	Pinhole	Average Diameter D(mm)	Maximum Number Acceptable		O	-
		D≦0.15	Ignore			
		0.15＜D≦0.3	10			
		D≦0.015	Ignore			
	Contrast Irregularity (Spot)	Average Diameter D(mm)	Maximum Number Acceptable	Minimum Space		
		D≦0.25	Ignore	-		
		0.25＜D≦0.35	10	20mm		
		0.35＜D≦0.5	4	20mm		
		0.5 ＜D	None	-		

No.	ITEM	CRITERIA				A	B
LCD	Contrast Irregularity (Line) (Filamentous)	Width W(mm)	Length L(mm)	Maximum Number Acceptable	Minimum Space	O	-
		W≦0.25	L≦1.2	2	20mm		
		W≦0.2	L≦1.5	3	20mm		
		W≦0.15	L≦2.0	3	20mm		
		W≦0.1	L≦3.0	4	20mm		
		Total		6			

No.	ITEM	CRITERIA		
LED B/L	Dark Spots, White Spots Foreign Materials (Spot)	Average Diameter D(mm)		Maximum Number Acceptable
		D≦0.4		Ignore
		D＞0.4		None
	Foreign Materials (Line)	Width W(mm)	Length L(mm)	Maximum Number Acceptable
		W≦0.2	L＜2.5	≦1
		W≦0.2	L＞2.5	None
		W＞0.2	-	None
	Scratches	Width W(mm)	Length L(mm)	Maximum Number Acceptable
		W≦0.1	-	Ignore
		0.1＜W≦0.2	L≦11.0	≦1
		0.1＜W≦0.2	L≧11.0	None
		W＞0.2	-	None

Note

(1) Definition of average diameter D

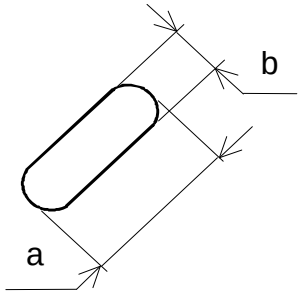

$$D = \frac{a+b}{2}$$

(2) Definition of length L and width W

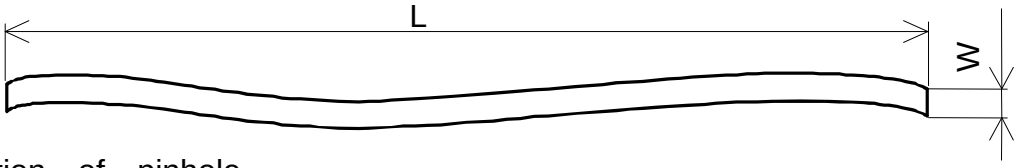

(3) Definition of pinhole

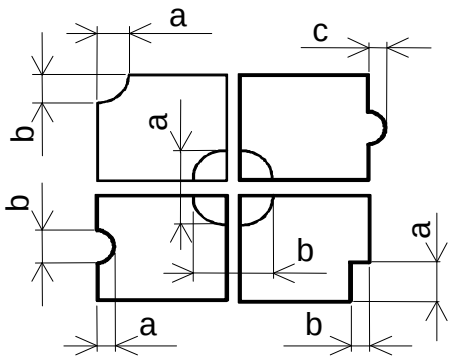

C : Salience

11. PRECAUTION IN DESIGN

11.1 LC DRIVING VOLTAGE (VEE) AND VIEWING ANGLE RANGE.

Setting VEE out of the recommended condition will be a cause for a change of viewing angle range.

11.2 CAUTION AGAINST STATIC CHARGE

As this module is provided with C-MOS LSI, the care to take such a precaution as grounding the operator's body is required when handling it.

11.3 POWER ON SEQUENCE

Input signals should not be applied to LCD module before power supply voltage is applied and reaches to specified voltage.

If above sequence is not kept, C-MOS LSI of LCD modules may be damaged due to latch up problem.

11.4 PACKAGING

(1) No leaving product is preferable in the place of high humidity for a long period of time.

For their storage in the place where temperature is 35℃ or higher, special care to prevent them from high humidity is required.

A combination of high temperature and high humidity may cause them polarization degradation as well as bubble generation and polarizer peel-off.

Please keep the temperature and humidity within the specified range for use and storage.

(2) Since upper/bottom polarizers tend to be easily damaged, they should be handled full with care so as not to get them touched, pushed or rubbed.

(3) As the adhesives used for adhering upper/bottom polarizers are made of organic substances which will be deteriorated by a chemical reaction with such chemicals as acetone, toluene , ethanol and isopropyl alcohol.

The following solvents are recommended for use:

normal hexane

please contact us when it is necessary for you to use chemicals.

(4) Lightly wipe to clean the dirty surface with absorbent cotton waste or other soft material like chamois , soaked in the chemicals recommended without scrubbing it hardly.

To prevent the display surface from damage and keep the appearance in good state, it is sufficient, in general, to wipe it with absorbent cotton.

(5) Immediately wipe off saliva or water drop attached on the display area because its long period adherence may cause deformation or faded color on the spot.

(6) Foggy dew deposited on the surface and contact terminals due to coldness will be caused for polarizer damage, stain and dirt on product.

When necessary to take out the products from some place at low temperature for test , etc.

It is required for them to be warmed up in a container once at the temperature higher than that of room.

(7) Touching the display area and contact terminals with bare hands and contaminating them are prohibited, because the stain on the display area and poor insulation between terminals are often caused by being touched by bare hands.

(Some cosmetics are detrimental to polarizers.)

(8) In general the quality of glass is fragile so that it tends to be cracked or chipped in handling, specially on its periphery.
Be careful not to give it sharp shock caused by dropping down, etc.

11.5 CAUTION FOR OPERATION

(1) It is an indispensable condition to drive LCD's within the specified voltage limit since the higher voltage than the limit causes the shorter LCD life.
An electrochemical reaction due to direct current causes LCD's undesirable deterioration, so that the use of direct current driver should be avoided.

(2) Response time will be extremely delayed at lower temperature than the operating temperature range and on the other hand at higher temperature LCD's show dark blue color in them.
However those phenomena do not mean malfunction or out of order with LCD's which will come back in the specified operating temperature range.

(3) IF the display area is pushed hard during operation, some font will be abnormally displayed but it resumes normal condition after turning off once.

(4) A slight dew depositing on terminals is a cause for electrochemical reaction resulting in terminal open circuit.
Usage under the relative condition of 40℃ 50%RH or less is required.

(5) Prevent continuous 4 hours or over same pattern displaying , to avoid Image-Sticking.

11.6 STORAGE

In case of storing for a long period of time (for instance, for years) for the purpose of replacement use , the following ways area recommended.

(1) Storage in a polyethylene bag with the opening sealed , so the fresh air will not be entered from outside .

(2) Placing in a dark place where neither exposure to direct sunlight nor light is , keeping temperature in the range from 0℃ to 35℃ .

(3) Storing with no touch on polarizer surface by anything else.
(It is not recommended to store them as they have been contained in the inner container at the time of delivery from us.)

11.7 SAFETY

(1) It is recommendable to crash damage or unnecessary LCD's into pieces and wash off liquid crystal by either of solvents such as acetone and ethanol , which should be burned up later.

(2) When any liquid leaked out of a damage glass call comes in contact with your hands, please wash it off well with soap and water.

12. DESIGNATION OF LOT MARK

12.1 Lot mark

Lot mark is consisted of 4 digital number.

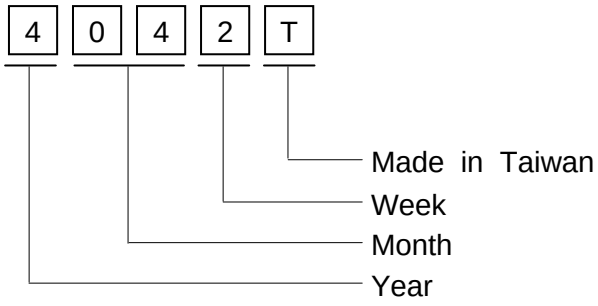

YEAR	FIGURE IN LOT MARK
2013	3
2014	4
2015	5
2016	6
2017	7

Note 1 : Some products have alphabet at the end or the first.

MONTH	FIGURE IN LOT MARK	MONTH	FIGURE IN LOT MARK
Jan.	01	Jul.	07
Feb.	02	Aug.	08
Mar.	03	Sep.	09
Apr.	04	Oct.	10
May	05	Nov.	11
Jun.	06	Dec.	12

WEEK (which week in month)	FIGURE IN LOT MARK
1st	1
2nd	2
3th	3
4th	4
5th	5

12.2 REVISION

REV No.	ITEM	NOTE
-	CFL I/F Connector :Mitsumi M63M83 - 04	-
A	1.CFL I/F Connector :JAE IL-G-4S-S3C2-SA 2. Operating Life (40,000h)	PCN0620
B	M count IC change	PCN0752
C	Controller IC Change	PCN0768
D	Ceramic Resonator Change	PCN0858

12.3 LOCATION OF LOT MARK

on the back side of LCM

4 0 7 2 T

13. PRECAUTION FOR USE

13.1 A limit sample should be provided by the both parties on an occasion when the both parties agreed its necessity.
Judgment by a limit sample shall take effect after the limit sample has been established and confirmed by the both parties.

13.2 On the following occasions, the handling of the problem should be decided through discussion and agreement between responsible persons of the both parties.

(1) When a question is arisen in the specifications.

(2) When a new problem is arisen which is not specified in this specifications.

(3) When an inspection specifications change or operating condition change in customer is reported to KOE, and some problem is arisen in this specification due to the change.

(4) When a new problem is arisen at the customer‘s operating set for sample evaluation in the customer site.

The precaution that should be observed when handling LCM have been explained above. If any points are unclear or if you have any request , please contact KOE.